Innovation, Sciences et Développement économique Canada
Office de la Propriété Intellectuelle du Canada

Innovation, Science and Economic Development Canada
Canadian Intellectual Property Office

CA 3127055 A1 2020/07/23

(21) 3 127 055

(12) DEMANDE DE BREVET CANADIEN
CANADIAN PATENT APPLICATION

(13) A1

(86) Date de dépôt PCT/PCT Filing Date: 2020/01/06
(87) Date publication PCT/PCT Publication Date: 2020/07/23
(85) Entrée phase nationale/National Entry: 2021/07/16
(86) N° demande PCT/PCT Application No.: US 2020/012370
(87) N° publication PCT/PCT Publication No.: 2020/150028
(30) Priorité/Priority: 2019/01/18 (US62/794,185)

(51) Cl.Int./Int.Cl. *G07F 17/00* (2006.01), *B62B 5/04* (2006.01), *G07F 7/00* (2006.01)

(71) Demandeur/Applicant:
INNOVATIVE STROLLERS, LLC, US

(72) Inventeurs/Inventors:
RUGGIERO, RICHARD, US;
RUGGIERO, GREGORY, US;
MARINO, MATTHEW, US

(74) Agent: SMART & BIGGAR LLP

(54) Titre : SYSTEME DE DISTRIBUTION AUTOMATIQUE DOTE DE MECANISMES DE VERROUILLAGE INTELLIGENTS

(54) Title: VENDING SYSTEM WITH SMART LOCK MECHANISMS

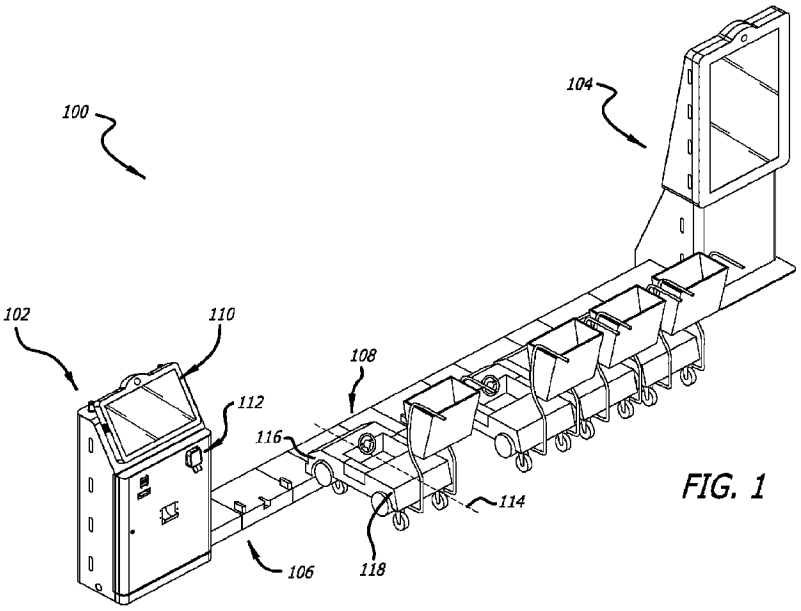

FIG. 1

(57) Abrégé/Abstract:
Systems and methods for operating a vending system for renting carts or strollers. The methods comprise: performing tag read operations or barcode scan operations by a device disposed at a lock mechanism of the vending system to obtain a unique identifier for a cart or stroller; selecting, by a computing device of the vending system, an image from a plurality of pre- stored images based on the unique identifier; displaying, by the computing device, the selected image along with other images as part of a graphical user interface facilitating cart or stroller rental; receiving, by the computing device, at least one user input for renting a cart or stroller associated with one of the displayed images; and performing operations by the computing device to cause a release of the lock mechanism that is locking the rented cart or stroller to the vending system.

(12) INTERNATIONAL APPLICATION PUBLISHED UNDER THE PATENT COOPERATION TREATY (PCT)

(19) World Intellectual Property Organization
International Bureau

(43) International Publication Date
23 July 2020 (23.07.2020)

WIPO | PCT

(10) International Publication Number
WO 2020/150028 A1

(51) International Patent Classification:
B62D 39/00 (2006.01) *G07F 7/00* (2006.01)
G07F 1/00 (2006.01) *G07F 9/00* (2006.01)

(21) International Application Number:
PCT/US2020/012370

(22) International Filing Date:
06 January 2020 (06.01.2020)

(25) Filing Language: English

(26) Publication Language: English

(30) Priority Data:
62/794,185 18 January 2019 (18.01.2019) US

(71) Applicant: **INNOVATIVE STROLLERS, LLC** [US/US]; 1360 North Delsea Drive, Clayton, New Jersey 08312 (US).

(72) Inventors: **RUGGIERO, Richard**; 16 Cortland Lane, Sewell, New Jersey 08080 (US). **RUGGIERO, Gregory**; 6 Windy Acres Drive, Sewell, New Jersey 08080 (US). **MARINO, Matthew**; 603 Balis Drive, Mullica Hill, New Jersey 08062 (US).

(74) Agent: **THORSTAD-FORSYTH, Carol E.** et al.; Fox Rothschild LLP, 997 Lenox Drive, Lawrenceville, New Jersey 08648-2311 (US).

(81) Designated States *(unless otherwise indicated, for every kind of national protection available)*: AE, AG, AL, AM, AO, AT, AU, AZ, BA, BB, BG, BH, BN, BR, BW, BY, BZ, CA, CH, CL, CN, CO, CR, CU, CZ, DE, DJ, DK, DM, DO, DZ, EC, EE, EG, ES, FI, GB, GD, GE, GH, GM, GT, HN, HR, HU, ID, IL, IN, IR, IS, JO, JP, KE, KG, KH, KN, KP, KR, KW, KZ, LA, LC, LK, LR, LS, LU, LY, MA, MD, ME, MG, MK, MN, MW, MX, MY, MZ, NA, NG, NI, NO, NZ, OM, PA, PE, PG, PH, PL, PT, QA, RO, RS, RU, RW, SA, SC, SD, SE, SG, SK, SL, ST, SV, SY, TH, TJ, TM, TN, TR, TT, TZ, UA, UG, US, UZ, VC, VN, WS, ZA, ZM, ZW.

(54) Title: VENDING SYSTEM WITH SMART LOCK MECHANISMS

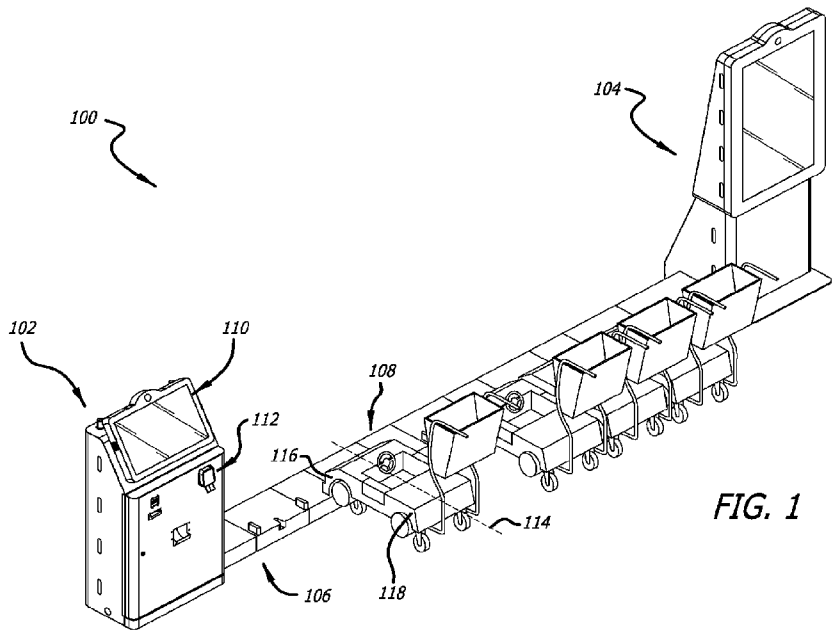

FIG. 1

(57) Abstract: Systems and methods for operating a vending system for renting carts or strollers. The methods comprise: performing tag read operations or barcode scan operations by a device disposed at a lock mechanism of the vending system to obtain a unique identifier for a cart or stroller; selecting, by a computing device of the vending system, an image from a plurality of pre- stored images based on the unique identifier; displaying, by the computing device, the selected image along with other images as part of a graphical user interface facilitating cart or stroller rental; receiving, by the computing device, at least one user input for renting a cart or stroller associated with one of the displayed images; and performing operations by the computing device to cause a release of the lock mechanism that is locking the rented cart or stroller to the vending system.

WO 2020/150028 A1

[Continued on next page]

WO 2020/150028 A1

(84) Designated States *(unless otherwise indicated, for every kind of regional protection available)*: ARIPO (BW, GH, GM, KE, LR, LS, MW, MZ, NA, RW, SD, SL, ST, SZ, TZ, UG, ZM, ZW), Eurasian (AM, AZ, BY, KG, KZ, RU, TJ, TM), European (AL, AT, BE, BG, CH, CY, CZ, DE, DK, EE, ES, FI, FR, GB, GR, HR, HU, IE, IS, IT, LT, LU, LV, MC, MK, MT, NL, NO, PL, PT, RO, RS, SE, SI, SK, SM, TR), OAPI (BF, BJ, CF, CG, CI, CM, GA, GN, GQ, GW, KM, ML, MR, NE, SN, TD, TG).

Published:

— *with international search report (Art. 21(3))*

VENDING SYSTEM WITH SMART LOCK MECHANISMS

CROSS-REFERENCE TO RELATED APPLICATIONS

[0001] This application claims the benefit of U.S. Provisional Patent Application Serial No. 62/794,185, filed January 18, 2019. This provisional patent application is incorporated herein by reference in its entirety.

BACKGROUND

Statement of the Technical Field

[0002] The present disclosure relates generally to vending systems. More particularly, the present disclosure relates to implementing vending systems with smart lock mechanisms (e.g., for carts and/or strollers).

Description of the Related Art

[0003] Cart vending systems exist which allow customers to rent carts or strollers for use while shopping in facilities (e.g., at a mall). The cart vending systems are configured to dispense carts or strollers after payment has been received from the customers.

SUMMARY

[0004] The present disclosure concerns implementing systems and methods for operating a vending system for renting carts or strollers. The methods comprise: performing tag read operations or barcode scan operations by a device disposed at a lock mechanism of the vending system to obtain a unique identifier for a cart or stroller; communicating the unique identifier for the cart or stroller (e.g., from the docking rail) to the computing device of the vending system; selecting, by the computing device, an image from a plurality of pre-stored images based on the unique identifier; displaying, by the computing device, the selected image along with other images as part of a Graphical User Interface ("GUI") facilitating cart or stroller rental; receiving, by the computing device, at least one user input for renting a cart or stroller associated with one

of the displayed images; and/or performing operations by the computing device to cause a release of the lock mechanism that is locking the rented cart or stroller to the vending system.

[0005] The carts or strollers may be stored in at least one row so as to have a side-by-side parallel arrangement. An elongate horizontal axis, that runs from a front of each cart or stroller to a back of each cart or stroller, may be angled 90° relative to a docking rail of the vending system. The device that performs the tag read operations or barcode scan operations may include, but is not limited to, a docking rail of the vending system to which the lock mechanism is coupled.

[0006] In some scenarios, the methods also comprise: using the unique identifier by the computing device to obtain rental transaction information for the cart or stroller; and dynamically updating the GUI to indicate an updated rental status of the cart or stroller, in response to an undocking of the cart or stroller from the vending system.

[0007] In those or other scenarios, the methods also comprise: receiving, by the lock mechanism or another lock mechanism, at least a portion of the cart or stroller which is being returned to the vending system; performing tag read operations or barcode scan operations by the lock mechanism or the another lock mechanism when the cart or stroller has been successfully received; using tag read data or barcode scan data to determine if a rental time for the cart or stroller has expired; causing actuation of the lock mechanism or the another lock mechanism to lock the cart or stroller to the vending system when a determination is made that the rental time for the cart has expired; dynamically changing the GUI to include a prompt for specifying a reason why the cart or stroller was return, when a determination is made that the rental time for the cart or stroller has not expired; causing actuation of the lock mechanism or the another lock mechanism to lock the cart or stroller to vending system based on the specified reason as to why the cart or stroller was returned; and/or disabling the lock mechanism or the another lock mechanism based on the specified reason as to why the cart or stroller was returned.

[0008] The methods may additionally or alternatively involve: dynamically changing the GUI to allow a user-input for selecting another cart or stroller, when a determination is made that

the rental time for the cart or stroller has not expired; and/or performing operations by the computing device to cause a release of another lock mechanism in response to the user-input.

[0009] In those or other scenarios, the methods involve: enabling at least one electronic component of the cart or stroller when the cart or stroller is undocked from the vending system; and disabling the enabled at least one electronic component of the cart or stroller when the cart or stroller is re-docked at the vending system. The enabling and disabling is achieved via a wireless communication from the lock mechanism to the at least one electronic component of the cart or stroller. The electronic component(s) include, but is(are) not limited to, a device charger for charging personal devices.

[0010] In those or other scenarios, the methods involve: comprising deactivating operations of the lock mechanism for charging an energy storage device of the cart or stroller when the lock mechanism is released; and/or re-activating the operations of the lock mechanism for charging the energy storage device of the cart or stroller when the lock mechanism is re-locked. The energy storage device may be at least partially disposed in or on a downward protruding post of the cart or stroller that is capturable by the lock mechanism.

[0011] In those or other scenarios, the methods involve: comprising dynamically changing the GUI to include an additional image in response to a cart's or stroller's return to the vending system; dynamically changing the GUI to remove at least one image therefrom in response to a cart's or stroller's undocking from the vending system; and/or dynamically changing the GUI to remove at least one image therefrom in response to a detection of a defective lock mechanism, cart or stroller.

BRIEF DESCRIPTION OF THE DRAWINGS

[0012] The present solution will be described with reference to the following drawing figures, in which like numerals represent like items throughout the figures.

[0013] FIG. 1 is an illustration of an illustrative vending system configured to allow customers to rent strollers.

[0014] FIG. 2 is an illustration of the vending system shown in FIG. 1 with the strollers decoupled therefrom.

[0015] FIGS. 3A-3B (collectively referred to herein as "FIG. 3") provide illustrations of another illustrative vending system configured to allow customers to rent strollers.

[0016] FIG. 4 is an illustration of the vending system shown in FIG. 3 with the strollers decoupled therefrom.

[0017] FIG. 5 provides a detailed block diagram of an exemplary architecture for a computing device.

[0018] FIG. 6 is a top view of an illustrative lock mechanism.

[0019] FIG. 7 is a bottom view of the illustrative lock mechanism shown in FIG. 6 with a cover removed therefrom and a latch in a fully unengaged position.

[0020] FIG. 8 is a bottom view of the illustrative lock mechanism shown in FIG. 6 with a cover removed therefrom and the latch in a fully engaged position.

[0021] FIGS. 9-11 show the lock mechanism with the latch in a various intermediary positions.

[0022] FIG. 12 is an assembly view of the lock mechanism shown in FIGS. 5-11.

[0023] FIG. 13 is a perspective view of a stroller chassis.

[0024] FIG. 14 is a side view of the stroller chassis shown in FIG. 13.

[0025] FIG. 15 is an illustration that is useful for understanding operations of a vending system in accordance with the present solution.

[0026] FIG. 16 is a diagram that is useful for understanding operations of a vending system in accordance with the present solution.

[0027] FIGS. 17A-17C (collectively referred to as "FIG. 17") provide a flow diagram of an illustrative method for operating a vending system in accordance with the present solution.

[0028] FIGS. 18A-18B (collectively referred to as "FIG. 18") provides a flow diagram of an illustrative method for operating a vending system for renting carts or strollers.

DETAILED DESCRIPTION

[0029] It will be readily understood that the components of the embodiments as generally described herein and illustrated in the appended figures could be arranged and designed in a wide variety of different configurations. Thus, the following more detailed description of various embodiments, as represented in the figures, is not intended to limit the scope of the present disclosure, but is merely representative of various embodiments. While the various aspects of the embodiments are presented in drawings, the drawings are not necessarily drawn to scale unless specifically indicated.

[0030] The present solution may be embodied in other specific forms without departing from its spirit or essential characteristics. The described embodiments are to be considered in all respects only as illustrative and not restrictive. The scope of the present solution is, therefore, indicated by the appended claims rather than by this detailed description. All changes which come within the meaning and range of equivalency of the claims are to be embraced within their scope.

[0031] Reference throughout this specification to features, advantages, or similar language does not imply that all of the features and advantages that may be realized with the present solution should be or are in any single embodiment of the present solution. Rather, language referring to the features and advantages is understood to mean that a specific feature, advantage, or characteristic described in connection with an embodiment is included in at least one embodiment of the present solution. Thus, discussions of the features and advantages, and similar language, throughout the specification may, but do not necessarily, refer to the same embodiment.

[0032] Furthermore, the described features, advantages and characteristics of the present solution may be combined in any suitable manner in one or more embodiments. One skilled in the relevant art will recognize, in light of the description herein, that the present solution can be practiced without one or more of the specific features or advantages of a particular embodiment. In other instances, additional features and advantages may be recognized in certain embodiments that may not be present in all embodiments of the present solution.

[0033] Reference throughout this specification to "one embodiment", "an embodiment", or similar language means that a particular feature, structure, or characteristic described in connection with the indicated embodiment is included in at least one embodiment of the present solution. Thus, the phrases "in one embodiment", "in an embodiment", and similar language throughout this specification may, but do not necessarily, all refer to the same embodiment.

[0034] As used in this document, the singular form "a", "an", and "the" include plural references unless the context clearly dictates otherwise. Unless defined otherwise, all technical and scientific terms used herein have the same meanings as commonly understood by one of ordinary skill in the art. As used in this document, the term "comprising" means "including, but not limited to".

[0035] The present solution concerns a vending system of the type that would be used to rent carts or strollers at facilities (e.g., malls, amusement parks, and/or other venues). The vending system comprises at least one smart lock component for selectively dispensing carts or strollers when certain criteria is met. The smart lock component described herein is not limited to vending system applications. It could also be used in many other applications such as locker applications, bike rental applications, handicap cart rental applications, and/or golf cart rental applications. The smart lock component is configured to dispense carts or strollers to paying customers. Payment can be received from the customer using a kiosk to which the smart lock component is attached and/or communicatively coupled. The kiosk includes a computing device that controls operations of the smart lock component when payment is successfully received and/or other criteria is met.

[0036] Illustrative Vending Systems

[0037] Referring now to FIGS. 1-2, there are provided illustrations of an illustrative vending system **100** in which the present solution is implemented. Vending system **100** comprises two kiosks **102**, **104** between which a stroller dispensing structure **106** is disposed. The vending system **100** is generally configured to allow customers to rent strollers for use while shopping in facilities (e.g., at a mall or grocery store).

[0038] Kiosk **104** is configured to simply present various information to onlookers. This information includes, but is not limited to, advertisements, event announcements, weather notifications, and/or safety alerts. In some scenarios, this information comprises a plurality of media items (e.g., images, videos, icons, windows, etc.) that are displayed in a pre-set or pre-configured order. In other scenarios, this information is selected based on historical shopping data associated with a given individual who has been detected as being in proximity to system **100** (e.g., within 5-20 feet). The shopping data includes, but is not limited to, tracked paths of travel through a facility by the detected individual on one or more previous occasions, and/or detected items (or pieces of merchandise) placed in the individual's stroller on one or more previous occasions while traveling through the facility. The individual can be detected using an identifier received from a mobile communication device (e.g., a smart phone) in the individual's possession. The identifier can include, but is not limited to, a device identifier, a user name, a customer number, and/or an account number.

[0039] In contrast, kiosk **102** is configured to facilitate user-software interactions with the vending system **100**. In order to facilitate the user-software interactions, kiosk **102** comprises a computing device **110** and payment means **112**. Computing device **110** will be described in detail below. Still, it should be understood that computing device **110** comprises a touch screen that displays GUIs by which a user can be presented information, can be prompted for information, and/or can input information. The payment means **112** includes, but is not limited to, a credit card reader, a bank card reader, a contactless payment device (e.g., a Radio Frequency Identification ("RFID") or Near Field Communication ("NFC") based payment device), a coin receiver, a cash receiver, and/or a pre-paid subscription/membership base device.

Each of the listed payment means is well known in the art, and therefore will not be described herein. Any known or to be known payment means can be used herein.

[0040] A plurality of strollers **108** are stored by the stroller dispensing structure **106**. The strollers **108** are stored in a row so as to have a side-by-side parallel arrangement shown in FIG. 1. The strollers **108** may be angled 90° or less relative to a docking rail **200** of the stroller dispensing structure. More specifically, an elongate horizontal axis **114** (that runs from the front **116** of the stroller to the back **118** of the stroller) is angled 90° or less relative to a docking rail **200**. The docking rail **200** is designed to give individuals the freedom to select any stroller **108** that (s)he wants to use at any given time. As such, the individual is not forced into taking the only available stroller as (s)he would do in a first-in, first-out vending system.

[0041] The docking rail **200** is designed to allow individuals to return defective, broken or inoperable strollers to the same or different kiosk, and exchange the same for another stroller. In this regard, it should be understood that docking rail **200** comprises an RFID tag reader and/or barcode scanner. RFID tag readers and barcode scanners are well known in the art, and therefore will not be described herein. Still, it should be understood that the RFID tag reader is generally configured to read RFID tags coupled to the strollers **108**, and the barcode scanner is configured to read barcodes coupled to the strollers **108**. The strollers **108** have unique identifiers associated therewith. The unique identifiers are communicated to the docking rail **200** via the RFID tag reads and/or barcode scans. The unique identifiers are provided from the docking rail **200** to the computing device **110** for processing. The processing is performed to obtain rental transaction information for the respective strollers. The rental transaction information can include, but is not limited to, a stroller model number, a stroller color, a stroller accessory type (e.g., a cup holder or a bag holder), the length of time a stroller was rented, and/or any detected damage caused to the stroller during one or more given rental time periods.

[0042] The stroller damage can be detected using one or more sensors that are physically coupled to the stroller and/or the kiosk. The stroller sensors can be configured to communicate with the RFID tag(s) such that sensor data can be stored in the RFID tag's memory and provided to the RFID tag reader. The kiosk sensors are communicatively coupled to the computing device

110 and/or a remote computing device (e.g., a server). The kiosk sensors can include, but are not limited to, cameras. The strollers sensors can include, but are not limited to, cameras, an accelerometer (e.g., for detecting if and when the stroller crashes into an object), a vibration sensor, and/or an orientation sensor to monitor the stroller's orientation (e.g., for detecting if and when the stroller rolls onto its side). The stroller sensors can communicate with the RFID tag coupled to the stroller, the RFID reader of the docking rail, and/or the computing device of the vending system.

[0043] In some scenarios, there is no time limit for a stroller rental. However, in other scenarios, time limits can be employed. Accordingly, an individual can be provided with an option to select or otherwise define a desired stroller rental time. In this case, the rental transaction information may also include, but is not limited to, information indicating the amount of time that a stroller has been rented by a given individual, the start time of the stroller rental, and/or an end time of the stroller rental.

[0044] Individuals are provided with the option to select another stroller within a pre-defined amount of time of successful payment for a stroller rental (e.g., within 35 second of successful payment). However, in other scenarios, individuals can additionally or alternatively return a broken stroller to the same or different kiosk during a stroller rental time and exchange it for another stroller. In this case, the rental transaction information is obtained from a local or centralized datastore, and analyzed to determine if a stroller rental time has or has not expired. If the stroller rental time has not expired when a stroller is returned to the vending system **100**, then the individual is (a) prompted via the GUI of computing device **110** to specify a reason for the stroller's return, and/or (b) provided with an option to select another stroller from the plurality of docked or latched strollers for use during the remainder of the stroller rental time. A given stroller is dispensed when selected by the individual using the touch screen of the computing device **110**.

[0045] The docked or latched strollers **108** are securely locked to the docking rail **200** via lock mechanisms **202**. The lock mechanisms **202** will be discussed in detail below. Still, it should be understood that each lock mechanism **202** is released when certain criteria is met as

determined by the computing device **110** of the kiosk **102**. For example, a lock mechanism **202** for releasing a particular docked or latched stroller is actuated (A) when a successful payment transaction for renting the particular stroller has been completed via kiosk **102**, (B) when an individual has arrived who reserved the particular stroller, (C) when an individual renting a stroller via the vending system **100** is a preferred customer or a customer associated with a customer loyalty program, and/or (D) when a user returns a broken stroller and selects the particular stroller during a paid for period of time for stroller use. Individuals can be identified by names, addresses, phone numbers, account numbers, customer loyalty codes, and/or identifying information (e.g., biometric characteristics, physical characteristics, and/or physiological characteristics). The biometric characteristics include, but are not limited to, facial features, finger prints, and/or iris features. The physical characteristics can include, but are not limited to, height, eye color, hair color, and posture. The physiological characteristics include, but are not limited to, age, sex and/or moods. Notably, in some scenario, certain ones of the strollers have restricted or limited use to only preferred customers and/or customers associated with a customer loyalty program.

[0046] In some scenarios, the strollers **108** comprise electronic components, such as lights, radios, display screens, sensors, a location device (e.g., a Global Positioning System ("GPS") device and/or a triangulation device) and/or device chargers (e.g., for mobile phones and/or tablets). Each of the listed electronic components are well known in the art, and therefore will not be described herein. The electronic components may be disabled when the strollers are docked and enabled when the strollers are undocked and/or payment for a rental thereof has been successfully received. In this way, individuals are unable to charge their personal devices (e.g., smart phones) via the vending system unless they have paid for a rental of one or more strollers. In some scenarios, the device charging capability is provided as a complimentary service to the stroller rental, and therefore is enabled in the manner recited above. However, in other scenarios, the device charging capability is enabled when the stroller is undocked only if a device charging fee was successfully paid in addition to the stroller rental fee.

[0047] Rechargeable batteries and/or other energy storage devices (e.g., capacitors) can be provided with the strollers **108** for supplying power the electronic components thereof. The batteries and/or energy storage devices are recharged via the docking rail **200**. For example, in some scenarios, a cordless charging means is provided that uses an electromagnetic field to transfer energy between the docking rail **200** and the strollers **108**. Such cordless charging means are well known in the art, and therefore will not be described herein. Any known or to be known cordless charging means can be used herein. The cordless charging means can be at least partially disposed in or on a downward protruding post of each stroller that is capturable by a lock mechanism **202** for locking the stroller to the docking rail **200**. In other scenarios, the strollers **108** comprise energy harvesting circuits configured to capture energy for charging the batteries and/or energy storage devices from received RF energy or other forms of energy (e.g., heat, light, vibration, and/or magnetic field) provided by energy sources disposed in the docking rail **200**. Such energy harvesting circuits are well known in the art, and therefore will not be described herein. Any known or to be known energy harvesting circuit can be used herein. The docking rail **200** can additionally or alternatively be designed to rotate at least the front wheels of the docked or latched strollers **108** for generating kinetic energy that can be used to recharge the batteries and/or energy storage devices. Techniques for rotating wheels are well known in the art, and therefore will not be described herein. Any known or to be known technique for rotating wheels can be used herein without limitation. The present solution is not limited to the particulars of these example and/or scenarios. Still, it should be noted that the cordless charging means, energy harvesting circuit, and/or wheel rotating mechanism may be disabled when a stroller is not locked to the docking rail by a respective lock mechanism and enabled when a stroller is locked to the docking rail by a respective lock mechanism.

[0048] Referring now to FIGS. 3-4, there are provided illustrations of another illustrative vending system **300** in which the present solution is implemented. Like vending system **100**, vending system **300** comprises two kiosks **302**, **304** between which a stroller dispensing structure **306** is disposed. The vending system **300** is generally configured to allow customers to rent strollers for use while shopping in facilities (e.g., at a mall).

[0049] Kiosk **304** is configured to simply present various information to onlookers. This information includes, but is not limited to, advertisements, event announcements, weather notifications, and/or safety alerts. In some scenarios, this information is displayed in a pre-set or pre-configured order. In other scenarios, this information is selected based on historical shopping data associated with a given individual who has been detected as being in proximity to system **100** (e.g., within 5-20 feet). The shopping data includes, but is not limited to, tracked paths of travel through a facility by the detected individual on one or more previous occasions, and/or detected items (or pieces of merchandise) placed in the individual's stroller on one or more previous occasions while traveling through the facility. The individual can be detected using an identifier received from a mobile communication device (e.g., a smart phone) in the individual's possession. The identifier can include, but is not limited to, a device identifier, a user name, a customer number, and/or an account number.

[0050] In contrast, kiosk **302** is configured to facilitate user-software interactions with the vending system **300**. In order to facilitate the user-software interactions, kiosk **302** comprises a computing device **310** and payment means **312**. Computing device **310** will be described in detail below. Still, it should be understood that computing device **310** comprises a touch screen by which a user can be presented information, can be prompted for information, and/or can input information. The payment means **312** includes, but is not limited to, a credit card reader, a bank card reader, a contactless payment device (e.g., an RFID or NFC based payment device), a coin receiver, a cash receiver, and/or a biometric scanner. Each of the listed payment means is well known in the art, and therefore will not be described herein. Any known or to be known payment means can be used herein.

[0051] A plurality of strollers **308** are stored by the stroller dispensing structure **306**. The strollers **308** are stored in two rows. In each row, the strollers have a side-by-side parallel arrangement. The strollers **108** may be angled 90° relative to a docking rail **400** of the stroller dispensing structure. The docking rail **400** is designed to give individuals the freedom to select any stroller **308** that (s)he wants to use at any given time. The individual does not have to take a single available stroller as (s)he would do in a first-in, first-out vending system.

[0052] The strollers **308** are securely locked to the docking rail **400** via lock mechanisms **402**. The lock mechanisms **402** will be discussed in detail below. Still, it should be understood that each lock mechanism **402** is released when certain criteria is met as determined by the kiosk **302**. For example, a lock mechanism **402** is released when a successful payment transaction for renting a stroller has been completed via kiosk **302**, and/or when a user returns a broken stroller.

[0053] In some scenarios, an RFID functionality is built into kiosks **102**, **302** that allows non-employees and/or others to be given RFID key tags. The RFID key tags allow these non-employees to remove all strollers from the vending system. This could be required for routine maintenance (e.g., polishing floors) or an event (e.g., the venue needs to bring automobiles through an entrance). The RFID key tag event is logged and locations of all strollers are tracked/logged until they are returned/locked to the vending system.

[0054] In some scenarios, the systems comprise a means for allowing customers to obtain access to assistance from remotely located individuals and/or systems. For example, this means can include a push button that activates a call to a call center, and/or a transceiver for establishing wireless communications between the rental system and a mobile device in the possession of the individual in proximity thereto. The communication can include, but is not limited to, a request for identifying information associated with the individual (e.g., a MAC address or loyalty number) and/or a command for the mobile device to place the call to the call center using information contained in the wireless communication from the rental system. The present solution is not limited to the particulars of this example.

[0055] Referring now to FIG. 5, there is provided a detailed block diagram of an illustrative architecture for a computing device **500**. Computing device **110** of FIG. 1 and computing device **310** of FIG. 3 are the same as or substantially similar to computing device **500**. As such, the following discussion of computing device **500** is sufficient for understanding computing device **110**, **310**. In some scenarios, the computing device **500** can be a centralized computing device residing in one of the kiosks (e.g., kiosks **102** or **104** of FIG. 1) or a distributed computing device at least partially residing in each kiosks. Alternatively, a computing device **500** can be included in each kiosk. Operations of the computing device **500** can be managed locally and/or remotely.

In the remote scenarios, the computing device **500** may be communicatively coupled to a remote server via a network (e.g., the Internet or a cellular network).

[0056] Notably, the computing device **500** may include more or less components than those shown in FIG. 5. However, the components shown are sufficient to disclose an illustrative embodiment implementing the present solution. The hardware architecture of FIG. 5 represents one embodiment of a representative computing device configured to facilitate stroller rental via a vending system. As such, the computing device **500** of FIG. 5 implements at least a portion of a method for controlling a vending system and/or lock mechanisms thereof in accordance with the present solution.

[0057] Some or all the components of the computing device **500** can be implemented as hardware, software and/or a combination of hardware and software. The hardware includes, but is not limited to, one or more electronic circuits. The electronic circuits can include, but are not limited to, passive components (e.g., resistors and capacitors) and/or active components (e.g., amplifiers and/or microprocessors). The passive and/or active components can be adapted to, arranged to and/or programmed to perform one or more of the methodologies, procedures, or functions described herein.

[0058] As shown in FIG. 5, the computing device **500** comprises a user interface **502**, a CPU **506**, a system bus **510**, a memory **512** connected to and accessible by other portions of computing device **500** through system bus **510**, and hardware entities **514** connected to system bus **510**. The user interface can include input devices (e.g., a keypad **550** and/or a touch screen **558**) and output devices (e.g., speaker **552**, a display **554**, and/or light emitting diodes **556**), which facilitate user-software interactions for controlling operations of the computing device **500**. The output devices can reside at one and/or both kiosks (e.g., kiosks **102**, **104** of FIG. 1) of the system (e.g., system **100**). The content presented by the display **554** can be dynamically changed based on the identity of and/or physical attributes of one or more individual(s) detected in proximity to the kiosk. The physical attributes can be determined based on camera data and/or biometric data.

[0059] At least some of the hardware entities **514** perform actions involving access to and use of memory **512**, which can be a RAM, a disk driver and/or a Compact Disc Read Only Memory ("CD-ROM"). Hardware entities **514** can include a disk drive unit **516** comprising a computer-readable storage medium **518** on which is stored one or more sets of instructions **520** (e.g., software code) configured to implement one or more of the methodologies, procedures, or functions described herein. The instructions **520** can also reside, completely or at least partially, within the memory **512** and/or within the CPU **506** during execution thereof by the computing device **500**. The memory **512** and the CPU **506** also can constitute machine-readable media. The term "machine-readable media", as used here, refers to a single medium or multiple media (e.g., a centralized or distributed database, and/or associated caches and servers) that store the one or more sets of instructions **520**. The term "machine-readable media", as used here, also refers to any medium that is capable of storing, encoding or carrying a set of instructions **520** for execution by the computing device **500** and that cause the computing device **500** to perform any one or more of the methodologies of the present disclosure.

[0060] In some scenarios, the hardware entities **514** include an electronic circuit (e.g., a processor) programmed for facilitating the rental of strollers from a vending system and/or the dispensing of strollers from the vending system in accordance with the present solution. In this regard, it should be understood that the electronic circuit can access and run a software application **522** installed on the computing device **500**. The software application **522** is generally operative to facilitate: the rental of strollers and/or respective device charging functions; the selective dispensing, undocking or unlatching of strollers; the selective actuation or release of lock mechanisms when certain criteria is met; the return of strollers; the exchange of strollers; the processing of RFID tag read information and/or barcode scan information to obtain rental transaction information for the respective strollers; the recharging of energy storage devices contained in the strollers; and/or the generation of analytical data. The analytical data can be used for dynamically selecting content to be displayed by the system, dynamically modifying stroller prioritization, dynamically changing rental pricing, and/or dynamically adjusting loyalty points. Other functions of the software application **522** will become apparent as the discussion progresses.

[0061] Referring now to FIGS. 6-12, there are provided illustrations of an illustrative lock mechanism **600**. The lock mechanism **202** of FIGS. 1-2 and the lock mechanism **402** of FIGS. 3-4 are the same as or substantially similar to the lock mechanism **600**. As such, the discussion of lock mechanism **600** is sufficient for understanding lock mechanisms **202**, **402**.

[0062] Lock mechanism **600** comprises a top cover **602** from which two guide structures **604**, **606** protrude out and away in an upward direction (e.g., out from the page). The guide structures **604**, **606** guide a stroller such that it is properly aligned with the lock mechanism **600** when being returned or docked to a docking rail (e.g., docking rail **200** of FIGS. 1-2 and/or docking rail **400** of FIGS. 3-4). More particularly, the stroller is guided towards the lock mechanism **600** such that a post **1400** (shown in FIGS. 13-14) extending in a downward direction from a stroller chassis **1300** (shown in FIGS. 13-14) travels into an insert space **608** of the lock mechanism **600**. In this regard, it should be understood that the guide structures **604**, **606** slide against side rails **1302**, **1304** (shown in FIGS. 13-14) of the stroller chassis **1300** when the stroller is being pushed into the lock mechanism **600**.

[0063] The lock mechanism **600** also comprises a bottom cover **1200** covering a latch mechanism **700**. The latch mechanism **700** is shown in a fully unengaged position in FIG. 7, a fully engaged position in FIG. 8, and a plurality of intermediary positions in FIGS. 9-11. As shown in FIGS. 7-11, the latch mechanism **700** pivots about a pivot point **704** in the clockwise direction **806** and counter clockwise direction **706**. In this way, the latch mechanism **700** transitions between the fully unengaged position in FIG. 7 and the fully engaged position in FIG. 8 via intermediary positions of FIGS. 9-11.

[0064] In the fully unengaged position of FIG. 7, a latch **702** is rotated about a pivot point **704** in a counter clockwise direction **706**. A resilient member **708** (e.g., a spring) provides tension to the latch **702** such that the latch **702** remains in its unengaged position until enough force is applied thereto by the post **1400** of the stroller chassis **1300** to cause the latch **702** to rotate about pivot point **704** in the counter clockwise direction **706**. A stop structure **710** is provided that limits how far the latch **702** can rotate in the counter clockwise direction **706**.

[0065] A safety mechanism **712** is provided that prevents the latch **702** from transitioning from its unengaged position to its engaged position when a person or animal inserts a hand, paw or other body part into insert space **608**. In this regard, it should be understood that the safety mechanism **712** is pivotable about a pivot point **714** and is resiliently biased by a resilient member **716** in a direction **718**. The resilient biasing causes the safety mechanism **712** to automatically rotate in direction **718** when a hook end **724** thereof is aligned with a slot **726** formed in the latch **702**. As a result of the safety mechanism's rotation in direction **718**, the hook end **724** engages a surface of the slot **726** so as to prevent the latch **702** from rotating in the counter clockwise direction **706**.

[0066] When a stroller is being docked, the post **1100** of a stroller chassis **1000** comes in contact with a planar part **728** of the safety mechanism **712**. The safety mechanism **712** rotates about pivot point **714** in direction away from the latch **702** as the post **1100** applies a pushing force on the planar part **728**. Once the hook end **724** is rotated out of the slot **726** of the latch **702**, a pushing force is applied by the post **1100** of the stroller chassis **1000** to a surface **720** of the latch **702**. This pushing force causes the latch **702** to rotate about the pivot point **704** in a counterclockwise direction **806** until a post **800** of the latch **702** is fully inserted into insert space **802** of a lock mechanism **804**.

[0067] As the post **800** travels into the insert space **802** it engages a securement part **808**. When the post **800** applies a pushing force to the securement part **808**, the securement part **808** is caused to rotate about pivot point **810** in a counterclockwise direction. The securement part **808** is locked in position when the post **800** is fully inserted into insert space **802**. For example, a pin is moved by an actuator (e.g., a motor) into an aperture formed through the securement part **808** so as to prevent rotation of the securement part **808** in a clockwise direction. In this way, the securement part **808** retains the latch **702** in its fully engaged position.

[0068] The securement part **808** is released when the vending system (e.g., vending system **100** of FIGS. 1-2 or **300** of FIGS. 3-4) determines that certain criteria is met such that a stroller can be pulled out and away from the lock mechanism **600**. An electronic circuit **812** is provided to facilitate communications to/from a computing device (e.g., computing device **110** of FIGS. 1-

2 or **310** of FIGS. 3-4) of the vending system, and to facilitate the selective unlocking of the securement part **808** when certain criteria is met.

[0069] The electronic circuit **812** may also comprise a tag reader **610**, a barcode scanner **612** and/or a charger **614** as shown in FIG. 6. The tag reader **610** is generally configured to read RFID tags coupled to the strollers (e.g., on the bottom of the stroller chassis **1300**). The barcode scanner **612** is configured to read barcodes coupled to the strollers (e.g., on the bottom of the stroller chassis **1300**). The charger **614** is configured to transfer energy between the lock mechanism **600** and a stroller for charging a battery and/or other energy storage device of the stroller.

[0070] The electronic circuit **812** may further comprise sensors to detect when the lock mechanism **600** is not operating properly, disable operations for locking/unlocking the lock mechanism **600** until a trigger event occurs (e.g., a status bit is changed), and/or send a notification of such detection to the computing device of the vending system so that it can be taken offline until repaired.

[0071] Referring now to FIG. 15, there is provided an illustration that is useful for understanding operations of the vending systems **100**, **300** described above. The vending systems **100**, **300** include hardware and software configured to facilitate stroller rentals by individuals. In this regard, a GUI **1500** is presented to individuals by computing systems **110**, **310** of the vending systems **100**, **300**.

[0072] The GUI **1500** includes a portion **1516** comprising widgets (e.g., selection boxes, drop down boxes, virtual buttons, etc.) that allow an individual to select a type of transaction. The transactions include, but are not limited to, a rental transaction for renting one or more strollers, an exchange transaction for exchanging a rented stroller with another stroller for the duration of the rental period, and a return transaction for returning a stroller.

[0073] The GUI **1500** also includes a portion **1502** comprising a plurality of selectable images **1508-1512**. The images include, but are not limited to, images showing the strollers which are currently docked in a docking rail **200**, **400** of the vending system **100**, **300** and/or are

currently available for rental. A stroller is currently available for rental when it has not been identified as a damaged stroller (e.g., by a customer and/or by machined learned information based on sensor data generated by sensors coupled to the strollers and/or kiosk), it has not been reserved by another individual, it can be used by any individual, and/or it can be used by people having a customer level that is the same as or lower than that of the individual trying to rent the stroller(s). An individual can select one or more images **1502-1506** at any given time to initiate a stroller rental transaction. In some scenario, an individual can only select one image at a time for stroller rental. If the individual wants to rent another stroller, (s)he will have to repeat the rental transaction process for renting a stroller. In other scenarios, an individual can perform one rental transaction for any number of stroller rentals.

[0074] In some scenarios, one or more images can be grayed out to show that they are not selectable at this time. For example, an image of a stroller that is only available to preferred customers is grayed out and non-selectable when a non-preferred customer is trying to rent a stroller. Additionally or alternatively, an image of a stroller that has been reserved may be grayed out when a person other than the person who made the reservation is trying to rent a stroller. The present solution is not limited in this regard.

[0075] The displayed images dynamically change as strollers **108**, **308** are returned to and removed from the vending system. In this regard, it should be noted that the images can be selected and added to the GUI **1500** based on tag read data and/or barcode scan data acquired by the lock mechanisms **202**, **402**, **600** of the vending systems. Also, images can be removed from the GUI **1500** when the respective strollers are undocked from the vending systems. A stroller is determined to be undocked when the respective lock mechanism has been released, and/or the lock mechanism's release has been verified (e.g., based on movement of the stroller away from the docking system and/or a change in the stroller's geographic locations relative to the docking system). The images are stored in a datastore **1514** and made accessible to the vending systems **110**, **300**. The datastore **1514** can be a local datastore (e.g., memory **512** of FIG. 5) or a remote datastore (e.g., a database).

[0076] In some scenarios, the locations of rented strollers are detected and tracked through the facility. The RFID tags, barcodes and/or beacons disposed on the rented strollers may be used for this purpose. Accordingly, tag readers, barcode scanners and/or beacon signal receiving devices are strategically placed with in the facility. When a stroller comes in proximity to one of these tag readers, barcode scanners and/or beacon signal receiving devices, the unique identifier associated with the RFID tag and/or stroller is acquired. Each unique identifier is communicated to the vending system **100** or **300** along with a timestamp and a unique identifier for the tag reader or barcode scanner. The strollers location is then determined based on the known location of the tag reader, barcode scanner and/or beacon signal receiving devices. In some scenarios where an individual can select a time period for stroller rental, the stroller location information may also be displayed on the GUI along with an expected time of the stroller's return to the vending system such that other individuals can have the option to wait for the stroller's return before performing a stroller rental transaction. The present solution is not limited to the particulars of these scenarios. For example, the locations of rented strollers may additionally or alternatively detected and tracked through a facility using GPS devices and/or other location devices coupled to the strollers.

[0077] In some scenarios, there is no time limit for a stroller rental. However, in other scenarios, time limits can be employed. Accordingly, the GUI **1500** may optionally include a portion **1504** that allows an individual to select or otherwise specify a desired duration for stroller rental. The GUI **1500** further includes a third portion **1506** that allows an individual to start and complete a payment transaction for renting one or more strollers. Payment can be made by cash, credit card, loyalty points and/or other payment means.

[0078] The loyalty points can be issued to individuals based on their use of the vending system(s) **100**, **300** and/or other vending equipment available at the facility. The loyalty points can be used to determine a rental fee for a stroller by a particular individual. Stated differently, the individual can use the loyalty points collected from his(her) history of stroller rentals and/or use of other vending equipment (e.g., metered massage chairs, food vending machines, small electronic vending machines, etc.) located at any venue under the loyalty program.

[0079] Once a successful payment has been made, the lock mechanism **202**, **402** or **600** associated with the stroller shown in the selected image **1512** is unlocked such that the stroller can be undocked and removed from the vending system **100** or **300**. If the stroller has not been undocked in a given amount of time (e.g., 3 minutes) starting from the time of successful payment, then the lock mechanism is once again locked and the individual is reimbursed for the payment amount.

[0080] Illustrative Methods For Operating A Vending System

[0081] FIG. 16 is a diagram that is useful for understanding operations of a vending system in accordance with the present solution. As shown in block **1602**, a stroller rental transaction begins when user inputs are received by a vending system (e.g., vending system **100** of FIG. 1 or **300** of FIG. 3) from an individual via a GUI (e.g., GUI **1500** of FIG. 15) displayed on a display (e.g., display **554** of FIG. 5) thereof. The user inputs can include, but are not limited to, a user input selecting a type of transaction, a user input for selecting one or more strollers, a user input for specifying a duration for rental of the selected stroller(s), a user input for selecting a device charging service, and/or a user input for making a payment.

[0082] In block **1604**, operations are performed by the vending system to complete the payment transaction. Methods for completing payment transactions are well known in the art, and therefore will not be described herein. Any known or to be known method for completing a payment transaction can be used herein without limitation.

[0083] In block **1606**, operations are performed by the vending system to unlock a lock mechanism (e.g., lock mechanism **202**, of FIGS. 1-2, **402** of FIGS. 3-4, or **600** of FIGS. 6-12) associated with the selected stroller. These operations involve: communicating an unlock command from a computing device (e.g., computing device **110** of FIG. 1, **310** of FIG. 3 and/or **500** of FIG. 5) to an electronic circuit (e.g., electronic circuit **812** of FIG. 8) of the lock mechanism; and releasing a securement part **808** of the lock mechanism in response to the unlock command.

[0084] In some cases, the individual may want to return the stroller as shown by block **1608**. Block **1608** involves receiving by the vending system a user input indicating that (s)he desires to return the stroller. In block **1610**, the vending system can also receive a user input specifying why the stroller is being returned. If the reason raises a safety concern regarding the returned stroller, then the vending system can re-secure the securement part **808** of the lock mechanism, disable the lock mechanism, log the return event, and/or provide notification of the same to an enterprise system such that the stroller can be serviced as shown by block **1612**.

[0085] Upon completing **1610** and/or **1612**, the process continues to **1614** where a GUI is presented to the individual that allows the same to select another stroller. The vending systems receives a user input selecting a stroller and performs operations to unlock the lock mechanism associated with the newly selected stroller.

[0086] Once a stroller has been undocked and removed from the vending system, operations of block **1616** are performed by the vending system for updating a stroller status in a datastore (e.g., memory **512** of FIG. 5), updating a lock mechanism's status in the datastore, and/or updating the GUI to reflect the stroller/lock status change.

[0087] In **1618**, the vending system detects when the stroller has been returned. This detection is made using RFID tag read data generated by a tag reader of the lock mechanism and/or barcode scan data generated by a barcode scanner of the lock mechanism. At this time, the vending system checks whether any additional payment is needed for the stroller rental (e.g., when the stroller was not returned at all or not returned in the paid-for-rental time period) and/or whether the individual should be reimbursed for any overpayment. In some scenarios, reimbursement only occurs if a stroller rental transaction is cancelled or otherwise terminated. In other scenarios, a reimbursement may also occur when the stroller is returned prior to expiration of the paid-for-rental time period. In some scenarios, the vending system performs a payment transaction or a payment reimbursement transaction as shown by block **1620**.

[0088] The vending system can also cause the lock mechanism's charger to be activated in block **1622** such that the energy storage device(s) of the stroller are charged. The charger can be deactivated when the lock mechanism is once again unlocked.

[0089] Referring now to FIG. 17, there is provided a flow diagram of an illustrative method **1700** for operating a vending system (e.g., vending system **100** of FIGS. 1-3 or **300** of FIGS. 3-4). Method **1700** begins with **1702** and continues with **1704** where lock mechanisms (e.g., lock mechanisms **202** of FIGS. 1-2, **402** of FIGS. 3-4, or **600** of FIGS. 6-12) perform tag read operations and/or barcode scan operations to detect and identify carts and/or strollers docked thereat. The tag read operations and/or barcode scan operations can be continuously performed, periodically performed at pre-defined times (e.g., every 5 minutes), or in response to trigger events (e.g., the return of a cart/stroller). Tag read data and/or barcode scan data is communicated from the lock mechanism to a computing device (e.g., computing device **110** of FIG. 1, **310** of FIG. 3, and/or **500** of FIG. 5) of the vending system in **1706**. In **1708**, the tag read data and/or the barcode scan data is stored in a datastore (e.g., memory **512** of FIG. 5) of the vending system or an enterprise system (e.g., a remote database accessible via a network, such as the Internet or Intranet).

[0090] In **1710**, the tag read data and/or barcode scan data is processed by the computing device of the vending system to determine the identity of and/or the current status of the carts/strollers and/or lock mechanisms. The cart/stroller status can include, but is not limited to, a docked status, an undocked status, and/or an inoperable or damaged status. The cart/stroller inoperable or damaged status may be determined based on user inputs as an alternative to the tag read data and/or barcode read data. The lock mechanism status can include, but is not limited to, a locked status, an unlocked status, an inoperable or damaged status, and/or a disabled status.

[0091] In **1712**, one or more images are selected by the computing device of the vending system from a plurality of pre-stored images of the carts/strollers and/or lock mechanisms based on the cart/stroller identity, the cart/stroller status, the lock mechanism identity, and/or lock mechanism status. A GUI (e.g., GUI **1500**) displayed on a display (e.g., display **554** of FIG. 5) of the computing device is updated in **1714** to include the image(s) selected in **1712**.

[0092] Next in **1716**, the vending system receives user inputs for renting at least one cart/stroller and/or for selecting a device charging feature of a cart/stroller via the display GUI. The user inputs can include, but are not limited to, a user input of identifying information (e.g., a

name, an address, a telephone number, an account number, a loyalty program number, etc.), a user selection of one or more displayed images, a user selection of an amount of time for a cart/stroller rental, a user selection of a payment means, and/or a user input for specifying a promotional code. In **1718**, a payment transaction for the cart/stroller rental and/or use of the device charging feature is completed in accordance with the user inputs received in **1716** and/or other information (e.g., account information and/or loyalty program information).

[0093] Once payment has been successfully completed, **1720** is performed where an unlock command is communicated from the computing device to the lock mechanism(s) associated with the cart(s)/stroller(s) that have been rented. The lock mechanism(s) is(are) unlocked in response to the unlock command, as shown by **1722**.

[0094] The vending system then monitors movement of and/or the lack of movement of the cart(s)/stroller(s) in **1724** to determine whether or not it(they) has(have) been undocked and removed from the lock mechanism(s) within a given period of time (e.g., 3 minutes) starting from the time of successful payment. Upon completing **1724**, method **1700** continues with **1726** of FIG. 17B.

[0095] If a cart/stroller has not been undocked/removed from the lock mechanism [**1726:NO**], then **1728** is performed where the lock mechanism is relocked, the cart's/stroller's status is updated in the datastore, and the lock mechanism's status is updated in the datastore. A payment reimbursement transaction or a cart/stroller exchange transaction is also performed. Additionally, the GUI can be updated to once again include the image of the cart/stroller or lock mechanism. Thereafter, **1766** of FIG. 17C is performed where method **1700** ends or other processing is performed.

[0096] If a cart/stroller has been undocked/removed from the lock mechanism [**1726:YES**], then **1730** is performed where the cart's/stroller's status and the lock mechanisms statuses are updated in the system. In optional **1732**, the cart's/stroller's location in the facility is tracked. The displayed GUI may also be updated in **1732** to indicate the cart's/stroller's rental status, location, and/or expected time of its return to the vending system.

[0097] Next, a decision is made in **1734** as to whether or not the cart/stroller has been returned. If so [**1734:YES**], then **1736** is performed where the lock mechanism is locked. Also, tag read data and/or barcode scan data is communicated from the lock mechanism to the computing device. At the computing device, the tag read data and/or barcode scan data is used to obtain rental transaction information for the cart/stroller, as shown by **1738**.

[0098] In some scenarios, there is no time limit for a stroller rental. In other scenarios, a user may be able to select a time limit for a stroller rental, where the user pays more as the time is increased from a pre-set minimum time period (e.g., 1 hour). Accordingly, method **1700** may include optional **1740, 1744-1764**.

[0099] If the rental transaction information indicates that the cart/stroller rental time has expired or is about to expire [**1740:YES**], then **1742** is performed where the cart/stroller status and/or lock mechanism status is updated in the system. **1766** of FIG. 17C is then performed where method **1700** ends or other processing is performed (e.g., return to **1712** of FIG. 17A).

[00100] If not [**1740:NO**], then optional **1744** is performed where the lock mechanism is disabled based on the reason (e.g., cart/stroller damaged), a return event is logged in the datastore, and/or a notification is provided to the enterprise system (e.g., notifying of cart/stroller damage such that a repairman can be deployed to the vending system). Upon completing **1744** and/or **1746**, method **1700** continues with **1747** of FIG. 17C.

[00101] As shown in FIG. 17C, **1747** involves receiving a user input via the displayed GUI for selecting another cart/stroller. The lock mechanism associated with the newly selected cart/stroller is then unlocked in **1748**. In **1750**, the cart's/stroller's status and/or the lock mechanism's status is(are) updated in the system.

[00102] When the cart/stroller has been returned [**1752:YES**], **1754** is performed where the lock mechanism is locked, and tag read data and/or barcode read data is communicated from the lock mechanism to the computing device. The cart's/stroller's status and/or lock mechanism's status are updated in the system as shown by **1756**. The displayed GUI may also be updated to reflect the same. The lock mechanism's charger may optionally be activated or enabled in **1758**.

[00103] In some scenarios, an improper operation of the lock mechanism is detected as shown by **1760**. When this occurs, the lock mechanism is disabled in **1760**. A notification regarding the disabled state may also be communicated from the lock mechanism to the computing device, as shown by **1764**. Subsequently, **1766** is performed where method **1700** ends or other processing is performed (e.g., return to **1716** of FIG. 17A).

[00104] Referring now to FIG. 18, there is provided a flow diagram of an illustrative method **1800** for operating a vending system for renting carts or strollers. Method **1800** begins with **1802** and continues with **1804** where tag read operations or barcode scan operations are performed by a device disposed at a lock mechanism of the vending system to obtain a unique identifier for a cart or stroller. The device can include, but is not limited to, a docking rail of the vending system to which the lock mechanism is coupled. The unique identifier is communicated in **1804** from a docking rail to a computing device of the vending system. In **1806**, the computing device selects an image from a plurality of pre-stored images based on the unique identifier. The selected image is displayed by the computing device along with other images as part of a GUI facilitating cart or stroller rental, as shown by **1808**.

[00105] In **1810**, the computing device receives at least one user input for renting a cart or stroller associated with one of the displayed images. The computing device then performs operations to cause a release of the lock mechanism that is locking the rented cart or stroller to the vending system, as shown by **1812**.

[00106] In **1814**, the GUI is dynamically updated to indicate an updated rental status of the cart or stroller. The dynamical GUI update may be performed in response to an undocking of the cart or stroller from the vending system. The dynamic update can involve removing at least one image from the GUI in response to a cart's or stroller's undocking from the vending system. In **1816**, operations of the lock mechanism for charging an energy storage device of the cart or stroller are deactivated when the lock mechanism is released. In **1818**, at least one electronic component of the cart or stroller is enabled when the cart or stroller is undocked from the vending system. This enablement can be achieved via a wireless communication from the lock

mechanism to the at least one electronic component of the cart or stroller. The electronic component includes, but is not limited to, a device charger for charging personal devices.

[00107] In **1820**, the lock mechanism or another lock mechanism receives at least a portion of the cart or stroller which is being returned to the vending system. Tag read operations or barcode scan operations are performed by the lock mechanism or the another lock mechanism in **1822** when the cart or stroller has been successfully received. In **1824**, the enabled electronic component(s) of the cart or stroller is(are) disabled when the cart or stroller is successfully received and/or re-docked at the vending system. This disablement can be achieved via a wireless communication from the lock mechanism to the at least one electronic component of the cart or stroller. The electronic component(s) include(s), but is(are) not limited to, a device charger for charging personal devices. Upon completing **1824**, method **1800** continues with **1826** of FIG. 18B.

[00108] As shown in FIG. 18B, **1826** involves re-activating the operations of the lock mechanism for charging the energy storage device of the cart or stroller when the lock mechanism is re-locked. The GUI is dynamically changed in **1828** to include an additional image in response to then cart's return or stroller's return to the vending system.

[00109] In **1830**, the tag read data or barcode scan data is used to determine if a rental time for the cart or stroller has expired. If the rental time has expired [**1832:YES**], then **1834** is performed where actuation of the lock mechanism or the another lock mechanism is caused so as to lock the cart or stroller to the vending system. Thereafter, **1844** is performed where method **1800** ends or other processing is performed (e.g., return to **1802** of FIG. 18A).

[00110] If the rental time has not expired [**1832:NO**], then **1836** is performed where the GUI is dynamically changed to include a prompt for specifying a reason why the cart or stroller was return. In **1838**, operations are performed to cause actuation and/or disablement of the lock mechanism or the another lock mechanism so as to lock the cart or stroller to vending system based on the specified reason as to why the cart or stroller was returned. In **1840**, operations are performed by the computing device to dynamically change the GUI to allow a user-input for selecting another cart or stroller. In **1842**, the computing device causes a release of another lock

mechanism in response to the user-input. Upon completing **1842**, **1844** is performed where method **1800** ends or other processing is performed (e.g., return to **1802** of FIG. 18A).

[00111] The present solution is not limited to the operations shown in FIG. 18. Method **1800** can include more or less operations than that shown in FIG. 18. For example, method **1800** can additionally involve dynamically changing the GUI to remove at least one image therefrom in response to a detection of a defective lock mechanism, cart or stroller.

[00112] Although the present solution has been illustrated and described with respect to one or more implementations, equivalent alterations and modifications will occur to others skilled in the art upon the reading and understanding of this specification and the annexed drawings. In addition, while a particular feature of the present solution may have been disclosed with respect to only one of several implementations, such feature may be combined with one or more other features of the other implementations as may be desired and advantageous for any given or particular application. Thus, the breadth and scope of the present solution should not be limited by any of the above described embodiments. Rather, the scope of the present solution should be defined in accordance with the following claims and their equivalents.

CLAIMS

What is claimed is:

1. A method for operating a vending system for renting carts or strollers, comprising:

performing tag read operations or barcode scan operations by a device disposed at a lock mechanism of the vending system to obtain a unique identifier for a cart or stroller;

selecting, by a computing device of the vending system, an image from a plurality of pre-stored images based on the unique identifier;

displaying, by the computing device, the selected image along with other images as part of a graphical user interface facilitating cart or stroller rental;

receiving, by the computing device, at least one user input for renting a cart or stroller associated with one of the displayed images; and

performing operations by the computing device to cause a release of the lock mechanism that is locking the rented cart or stroller to the vending system.

2. The method according to claim 1, wherein the carts or strollers are stored in at least one row so as to have a side-by-side parallel arrangement.

3. The method according to claim 2, wherein an elongate horizontal axis, that runs from a front of each cart or stroller to a back of said each cart or stroller, is angled 90° relative to a docking rail of the vending system.

4. The method according to claim 1, wherein the device that performs the tag read operations or barcode scan operations comprises a docking rail of the vending system to which the lock mechanism is coupled.

5. The method according to claim 4, further comprising communicating the unique identifier for the cart or stroller from the docking rail to the computing device of the vending system.

6. The method according to claim 5, further comprising using the unique identifier by the computing device to obtain rental transaction information for the cart or stroller.

7. The method according to claim 1, further comprising dynamically updating the Graphical User Interface to indicate an updated rental status of the cart or stroller, in response to an undocking of the cart or stroller from the vending system.

8. The method according to claim 1, further comprising:

receiving, by the lock mechanism or another lock mechanism, at least a portion of the cart or stroller which is being returned to the vending system;

performing tag read operations or barcode scan operations by the lock mechanism or the another lock mechanism when the cart or stroller has been successfully received; and

using tag read data or barcode scan data to determine if a rental time for the cart or stroller has expired.

9. The method according to claim 8, further comprising causing actuation of the lock mechanism or the another lock mechanism to lock the cart or stroller to the vending system when a determination is made that the rental time for the cart has expired.

10 The method according to claim 9, further comprising dynamically changing the Graphical user Interface to include a prompt for specifying a reason why the cart or stroller was return, when a determination is made that the rental time for the cart or stroller has not expired.

11. The method according to claim 10, further comprising causing actuation of the lock mechanism or the another lock mechanism to lock the cart or stroller to vending system based on the specified reason as to why the cart or stroller was returned.

12. The method according to claim 10, further comprising disabling the lock mechanism or the another lock mechanism based on the specified reason as to why the cart or stroller was returned.

13. The method according to claim 8, further comprising dynamically changing the Graphical User Interface to allow a user-input for selecting another cart or stroller, when a determination is made that the rental time for the cart or stroller has not expired.

14. The method according to claim 13, further comprising performing operations by the computing device to cause a release of another lock mechanism in response to the user-input.

15. The method according to claim 1, further comprising enabling at least one electronic component of the cart or stroller when the cart or stroller is undocked from the vending system.

16. The method according to claim 15, further comprising disabling the enabled at least one electronic component of the cart or stroller when the cart or stroller is re-docked at the vending system.

17. The method according to claim 16, wherein the enabling and disabling is achieved via a wireless communication from the lock mechanism to the at least one electronic component of the cart or stroller.

18. The method according to claim 15, wherein the at least one electronic component comprises a device charger for charging personal devices.

19. The method according to claim 1, further comprising deactivating operations of the lock mechanism for charging an energy storage device of the cart or stroller when the lock mechanism is released.

20. The method according to claim 19, further comprising re-activating the operations of the lock mechanism for charging the energy storage device of the cart or stroller when the lock mechanism is re-locked.

21. The method according to claim 19, wherein the energy storage device is at least partially disposed in or on a downward protruding post of the cart or stroller that is capturable by the lock mechanism.

22. The method according to claim 1, further comprising dynamically changing the graphical user interface to include an additional image in response to a cart's or stroller's return to the vending system.

23. The method according to claim 1, further comprising dynamically changing the graphical user interface to remove at least one image therefrom in response to a cart's or stroller's undocking from the vending system.

24. The method according to claim 1, further comprising dynamically changing the graphical user interface to remove at least one image therefrom in response to a detection of a defective lock mechanism, cart or stroller.

25. A vending system, comprising:

a processor; and

a non-transitory computer-readable storage medium comprising programming instructions that are configured to cause the processor to implement a method for operating a vending system for renting carts or strollers, wherein the programming instructions comprise instructions to:

cause a performance of tag read operations or barcode scan operations by a device disposed at a lock mechanism of the vending system to obtain a unique identifier for a cart or stroller;

select an image from a plurality of pre-stored images based on the unique identifier;

display the selected image along with other images as part of a graphical user interface facilitating cart or stroller rental;

receive at least one user input for renting a cart or stroller associated with one of the displayed images; and

cause a release of the lock mechanism that is locking the rented cart or stroller to the vending system.

26. The system according to claim 25, wherein the carts or strollers are stored in at least one row so as to have a side-by-side parallel arrangement.

27. The system according to claim 26, wherein an elongate horizontal axis, that runs from a front of each cart or stroller to a back of said each cart or stroller, is angled 90° relative to a docking rail of the vending system.

28. The system according to claim 25, wherein the device that performs the tag read operations or barcode scan operations comprises a docking rail of the vending system to which the lock mechanism is coupled.

29. The system according to claim 28, wherein the unique identifier for the cart or stroller is received from the docking rail of the vending system.

30. The system according to claim 29, wherein the programming instructions comprise instructions to use the unique identifier to obtain rental transaction information for the cart or stroller.

31. The system according to claim 25, wherein the programming instructions comprise instructions to cause a dynamic update of the graphical user interface to indicate an updated rental status of the cart or stroller, in response to an undocking of the cart or stroller from the vending system.

32. The system according to claim 25, wherein the programming instructions comprise instructions to:

cause tag read operations or barcode scan operations to be performed by the lock mechanism or another lock mechanism when the cart or stroller has been successfully received thereby; and

use tag read data or barcode scan data to determine if a rental time for the cart or stroller has expired.

33. The system according to claim 32, wherein the programming instructions comprise instructions to cause actuation of the lock mechanism or the another lock mechanism to lock the cart or stroller to the vending system when a determination is made that the rental time for the cart has expired.

34 The system according to claim 33, wherein the programming instructions comprise instructions to cause a dynamic change of the graphical user interface to include a prompt for specifying a reason why the cart or stroller was return, when a determination is made that the rental time for the cart or stroller has not expired.

35. The system according to claim 34, wherein the programming instructions comprise instructions to cause actuation of the lock mechanism or the another lock mechanism to lock the cart or stroller to vending system based on the specified reason as to why the cart or stroller was returned.

36. The system according to claim 34, wherein the programming instructions comprise instructions to cause a disablement of the lock mechanism or the another lock mechanism based on the specified reason as to why the cart or stroller was returned.

37. The system according to claim 32, wherein the programming instructions comprise instructions to cause a dynamic change of the graphical user interface to allow a user-input for selecting another cart or stroller, when a determination is made that the rental time for the cart or stroller has not expired.

38. The system according to claim 37, wherein the programming instructions comprise instructions to cause a release of another lock mechanism in response to the user-input.

39. The system according to claim 25, wherein the programming instructions comprise instructions to cause an enablement of at least one electronic component of the cart or stroller when the cart or stroller is undocked from the vending system.

40. The system according to claim 39, wherein the programming instructions comprise instructions to cause a disablement of the enabled at least one electronic component of the cart or stroller when the cart or stroller is re-docked at the vending system.

41. The system according to claim 40, wherein the enabling and disabling is achieved via a wireless communication from the lock mechanism to the at least one electronic component of the cart or stroller.

42. The system according to claim 39, wherein the at least one electronic component comprises a device charger for charging personal devices.

43. The system according to claim 25, wherein the programming instructions comprise instructions to cause a deactivation of lock mechanism operations for charging an energy storage device of the cart or stroller when the lock mechanism is released.

44. The system according to claim 43, wherein the programming instructions comprise instructions to cause a re-activation of the lock mechanism operations for charging the energy storage device of the cart or stroller when the lock mechanism is re-locked.

45. The system according to claim 43, wherein the energy storage device is at least partially disposed in or on a downward protruding post of the cart or stroller that is capturable by the lock mechanism.

46. The system according to claim 25, wherein the programming instructions comprise instructions to cause a dynamic change in the graphical user interface to include an additional image in response to a cart's or stroller's return to the vending system.

47. The system according to claim 25, wherein the programming instructions comprise instructions to cause a dynamic change in the graphical user interface to remove at least one image therefrom in response to a cart's or stroller's undocking from the vending system.

48. The system according to claim 25, wherein the programming instructions comprise instructions to cause a dynamic change in the graphical user interface to remove at least one image therefrom in response to a detection of a defective lock mechanism, cart or stroller.

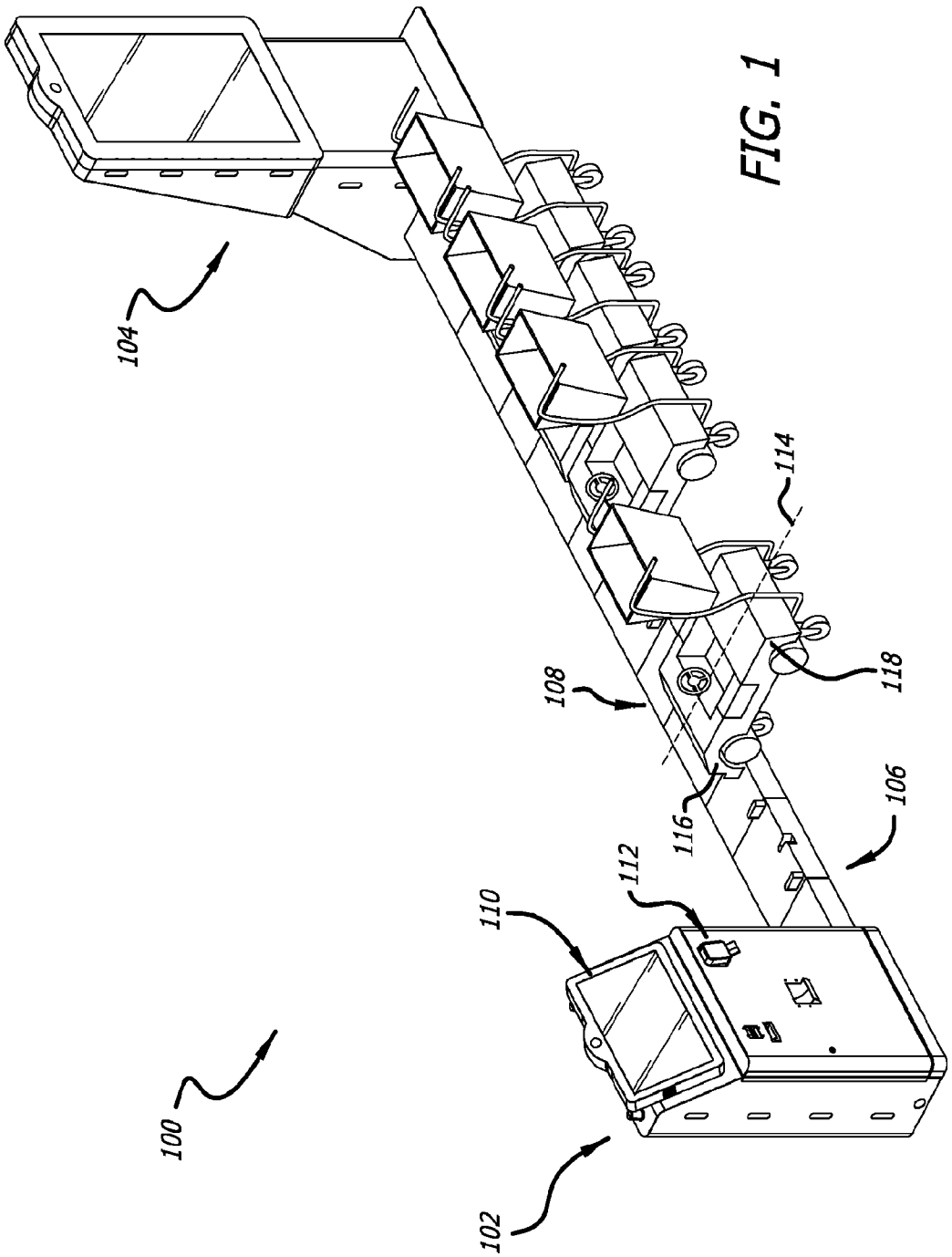

FIG. 1

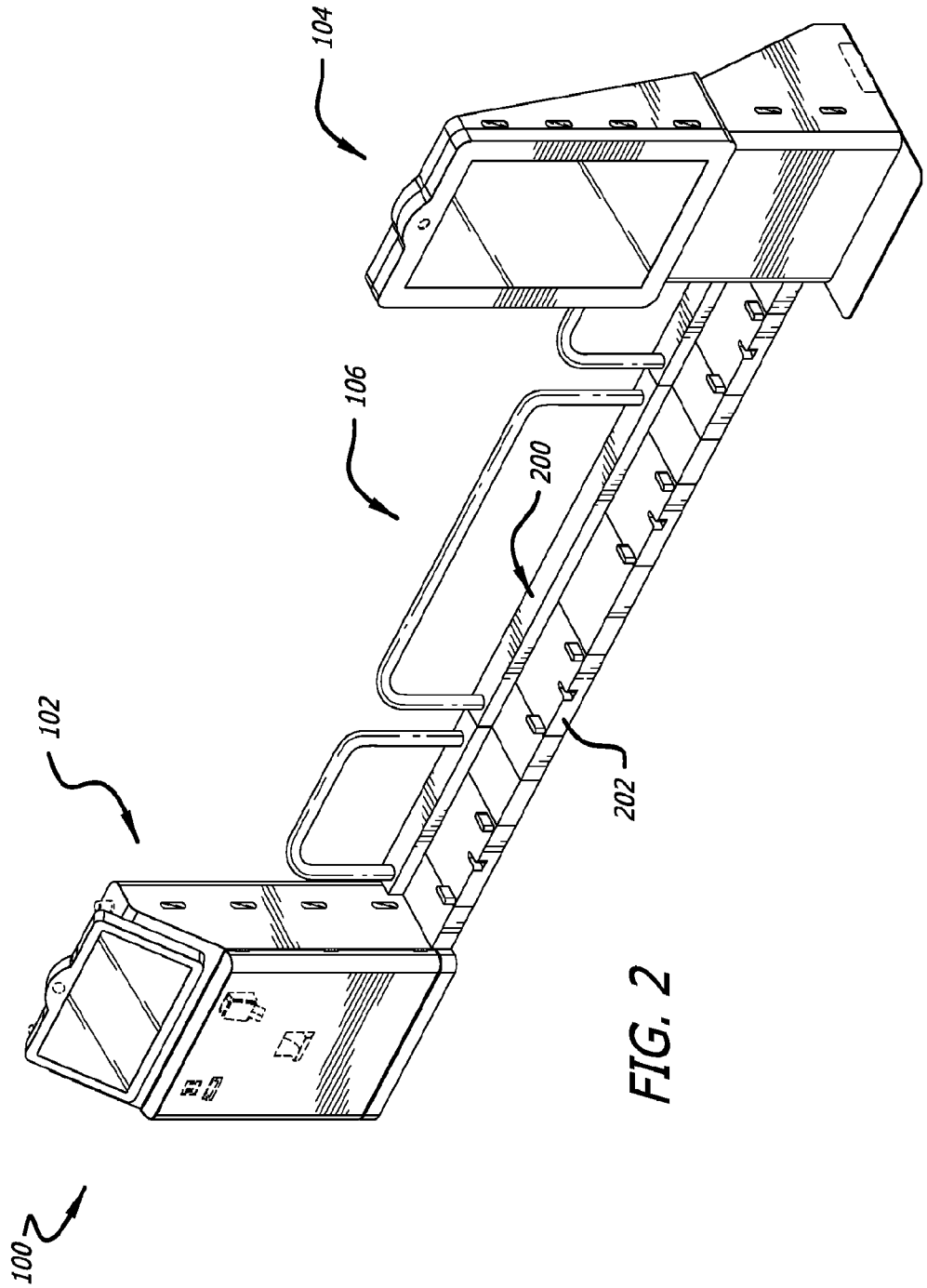

FIG. 2

FIG. 3A

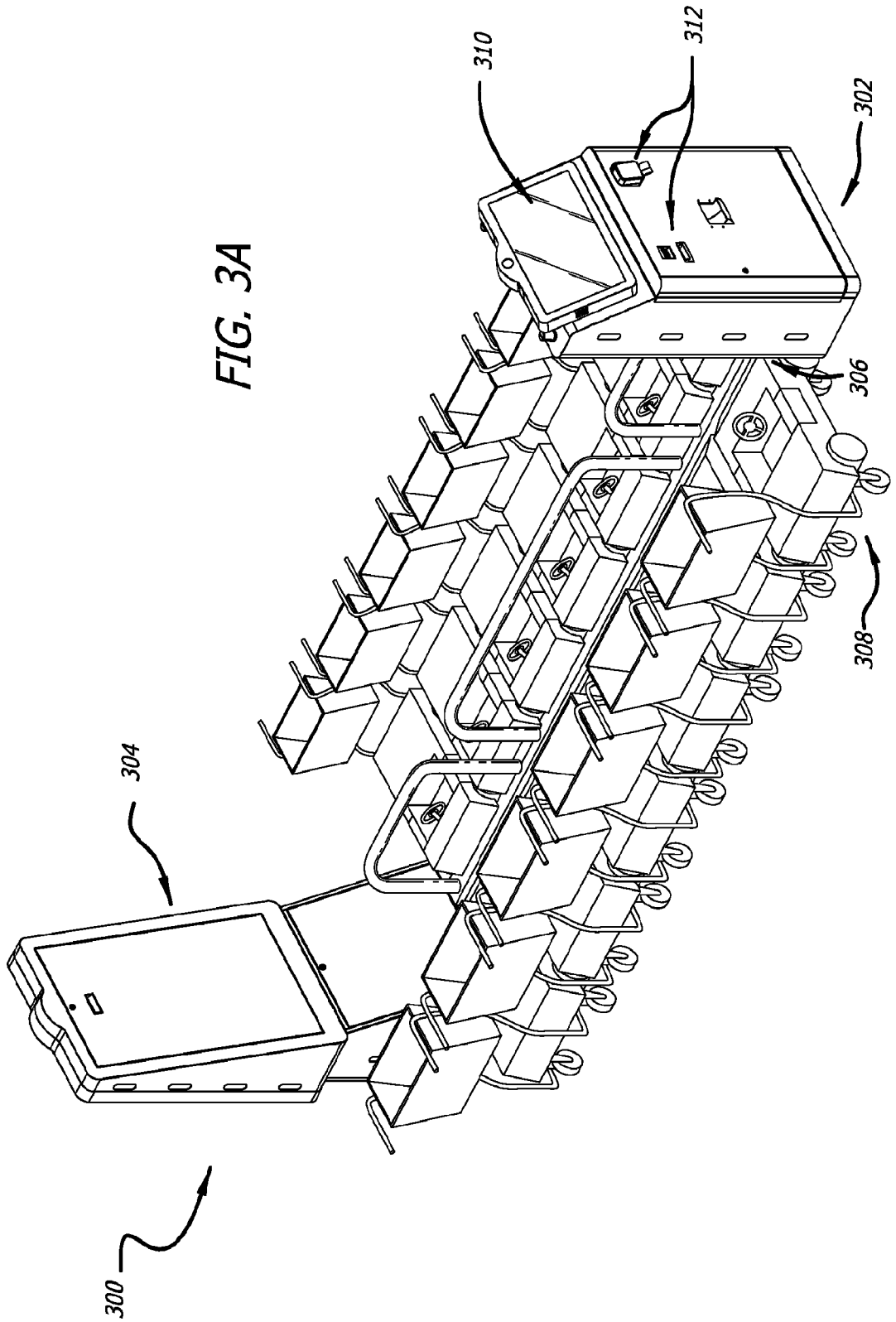

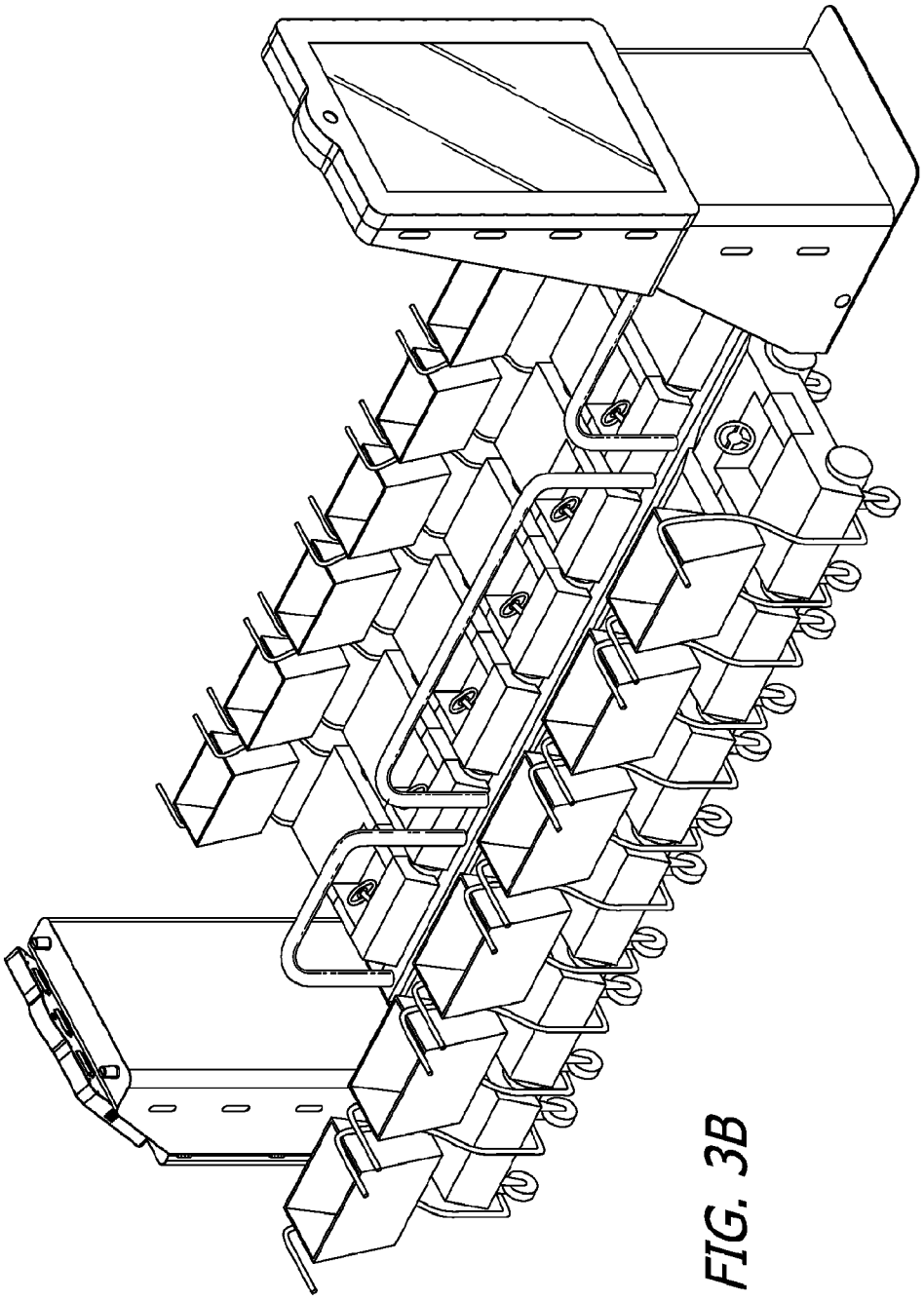

FIG. 3B

FIG. 4

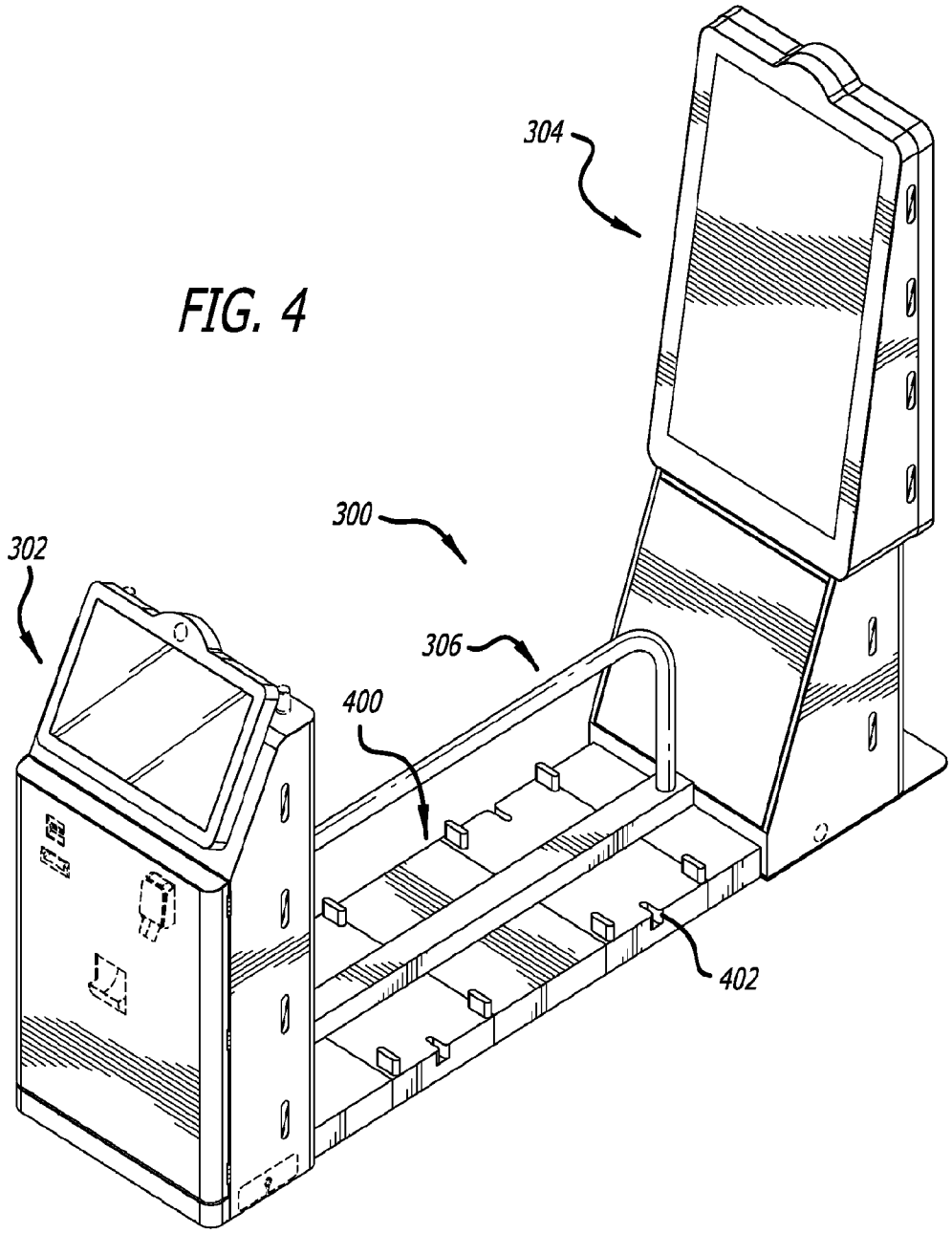

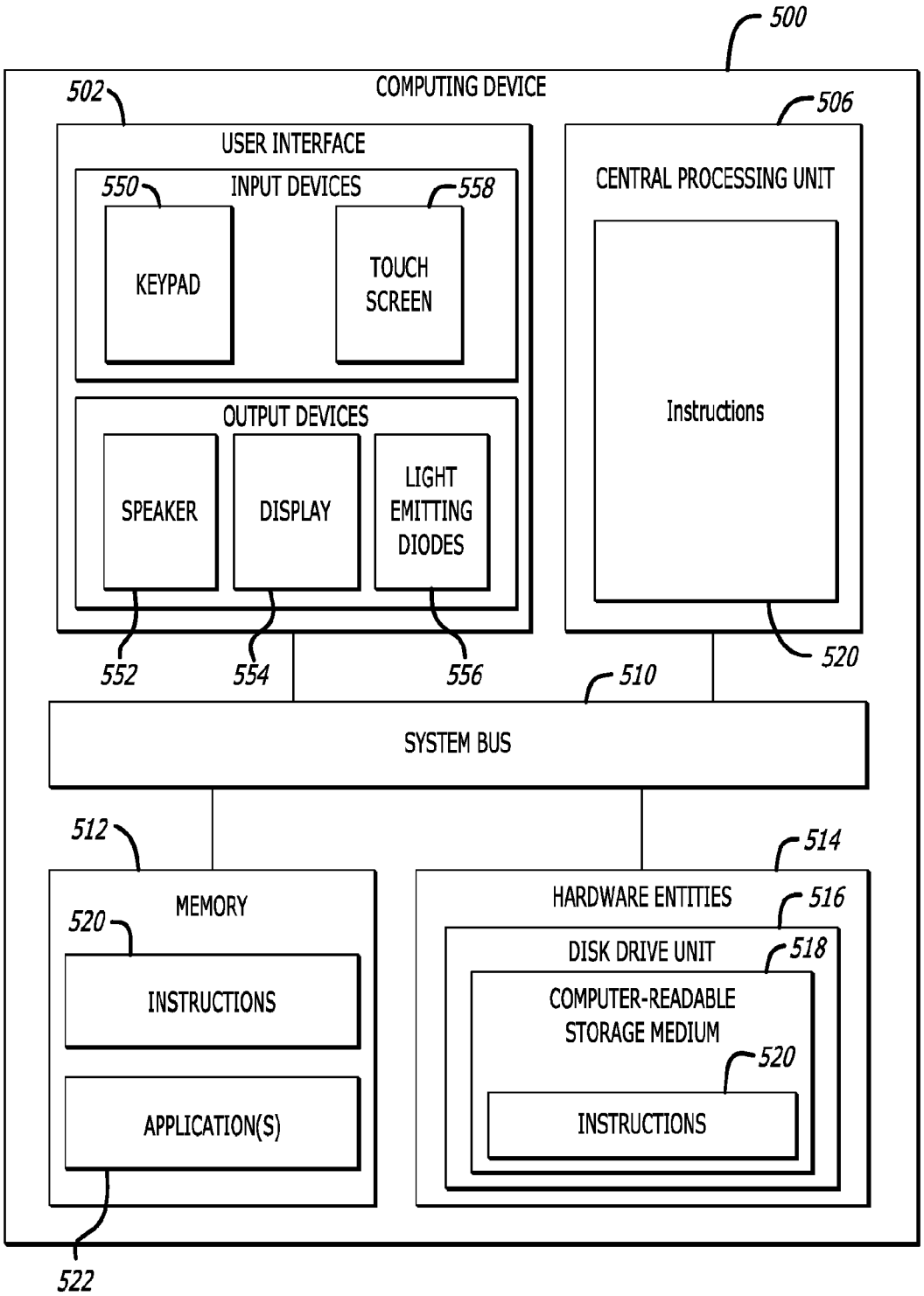
500
COMPUTING DEVICE
502
USER INTERFACE
550
INPUT DEVICES
558
KEYPAD
TOUCH SCREEN
OUTPUT DEVICES
SPEAKER
DISPLAY
LIGHT EMITTING DIODES
506
CENTRAL PROCESSING UNIT
Instructions
552
554
556
520
510
SYSTEM BUS
512
MEMORY
520
INSTRUCTIONS
APPLICATION(S)
522
514
HARDWARE ENTITIES
516
DISK DRIVE UNIT
518
COMPUTER-READABLE STORAGE MEDIUM
520
INSTRUCTIONS

FIG. 5

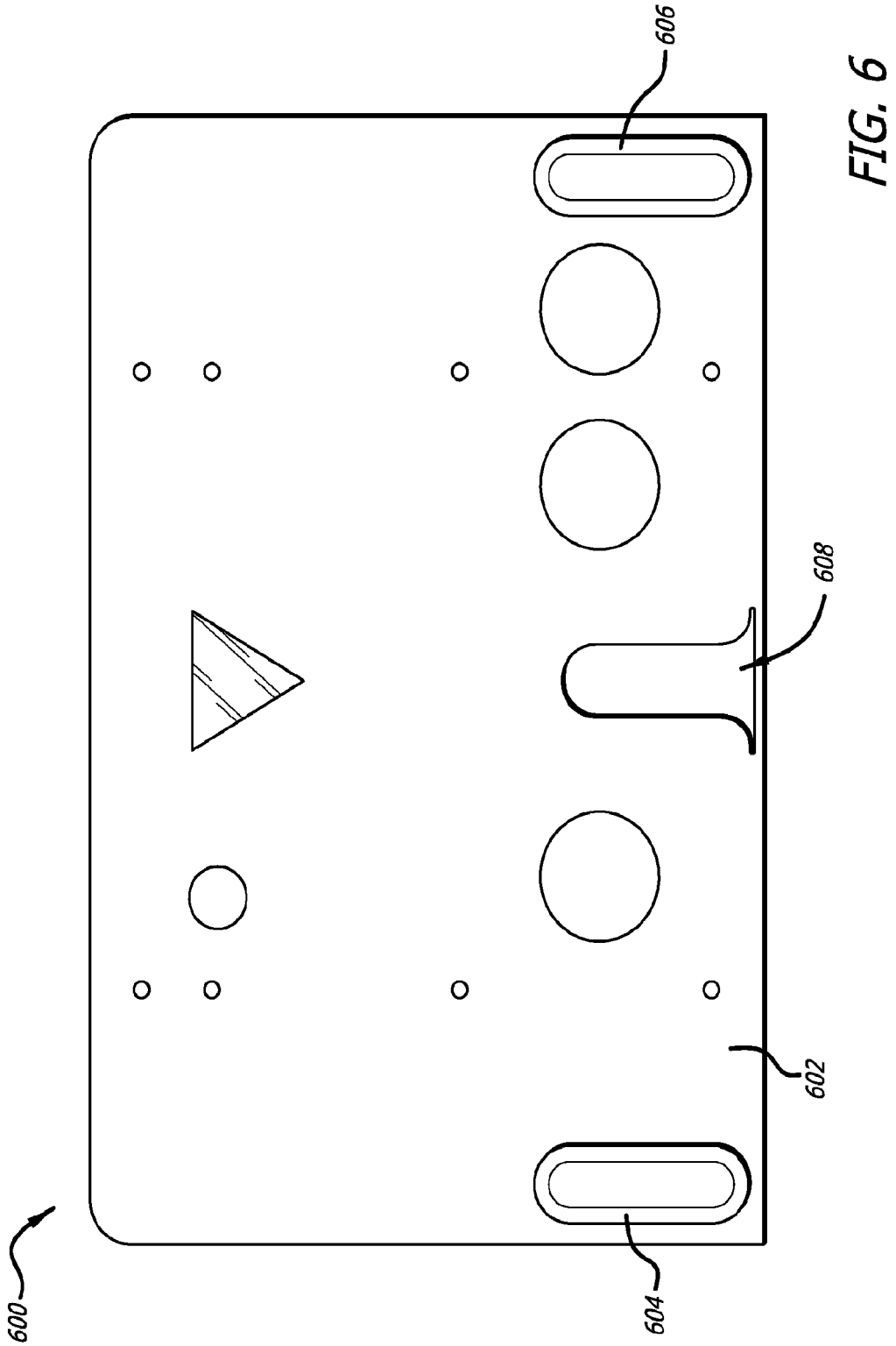

FIG. 6

FIG. 7

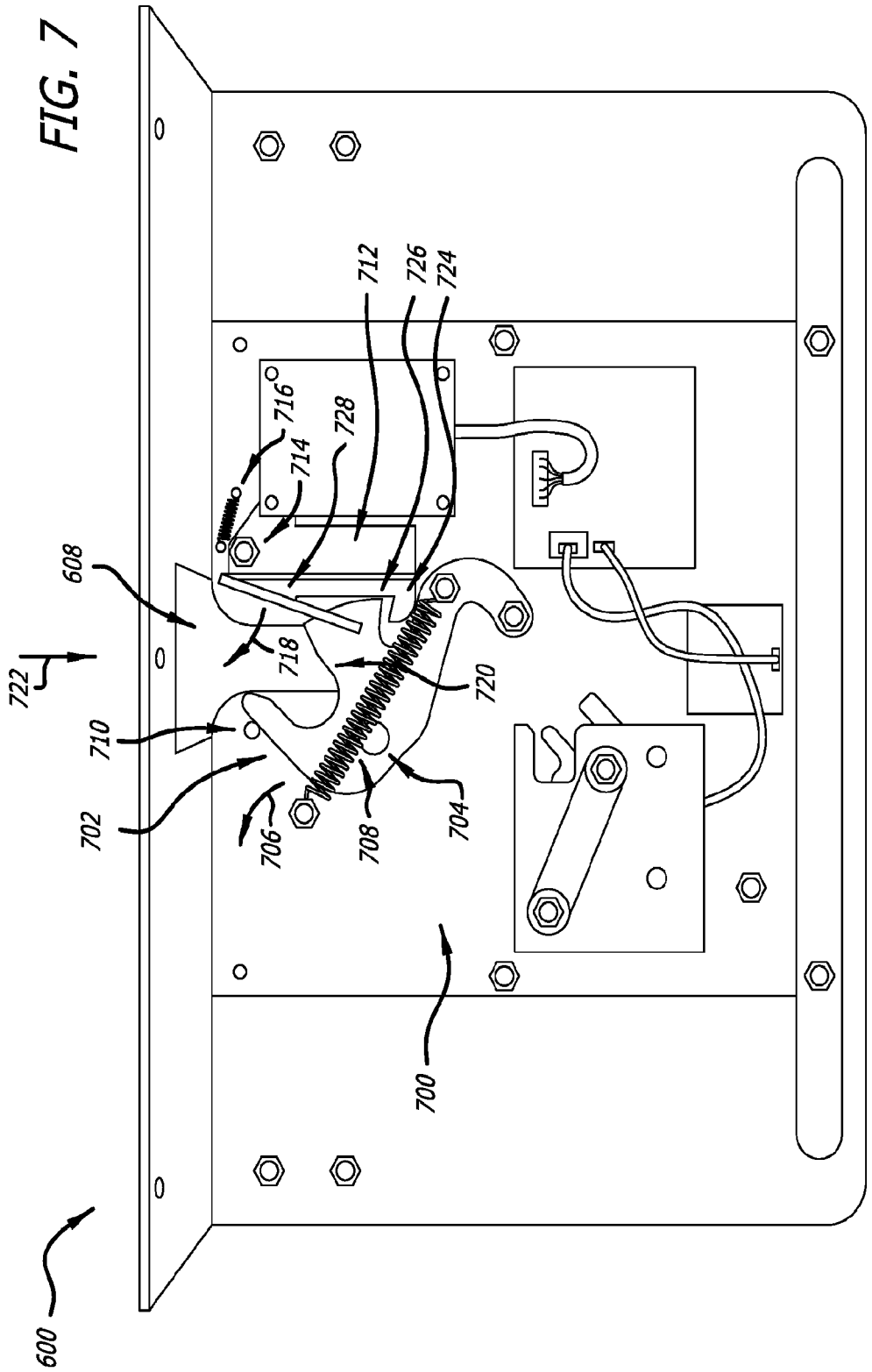
712
726
724
716
728
714
608
718
720
722
710
702
706
708
704
700
600

FIG. 8

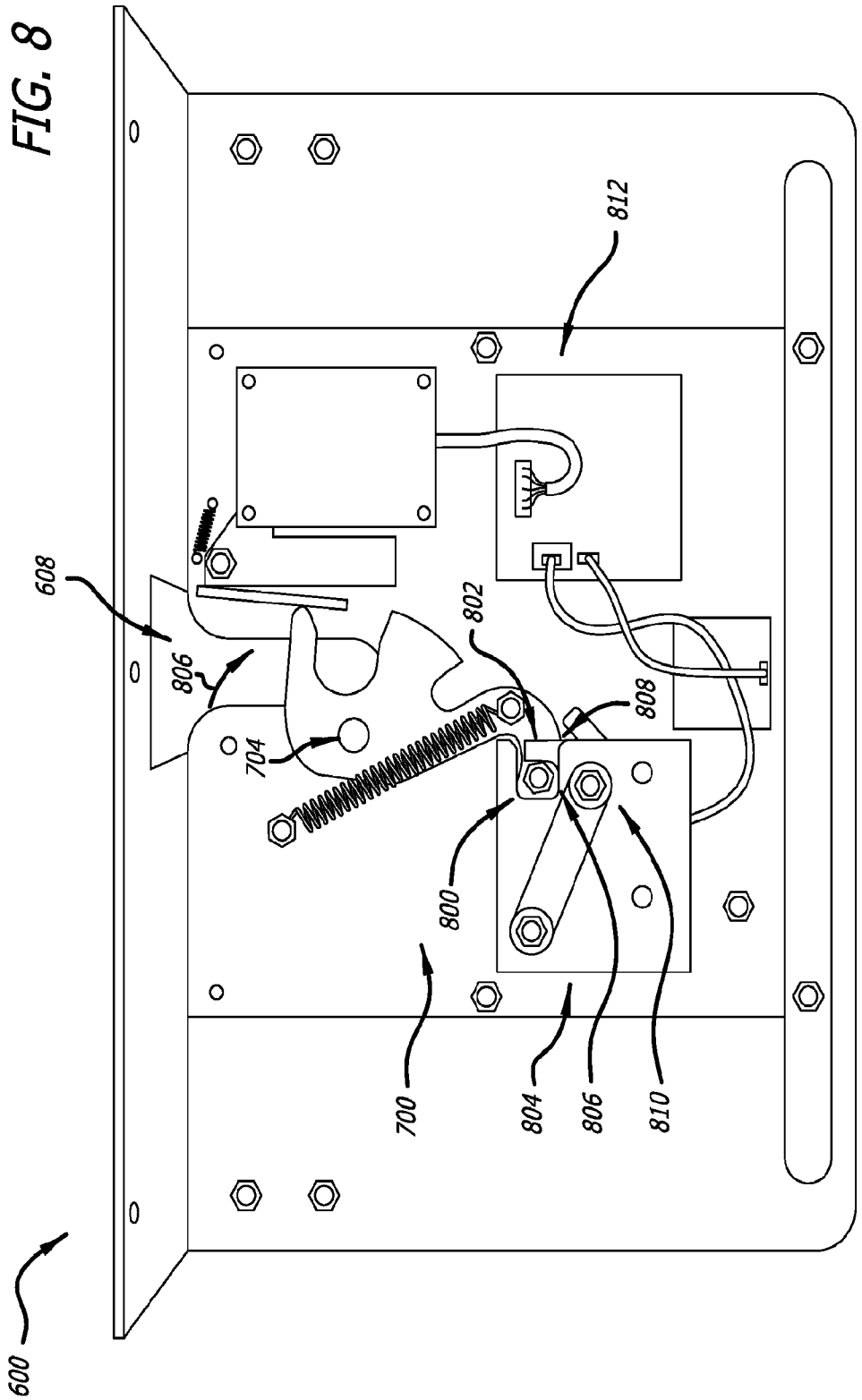

FIG. 9

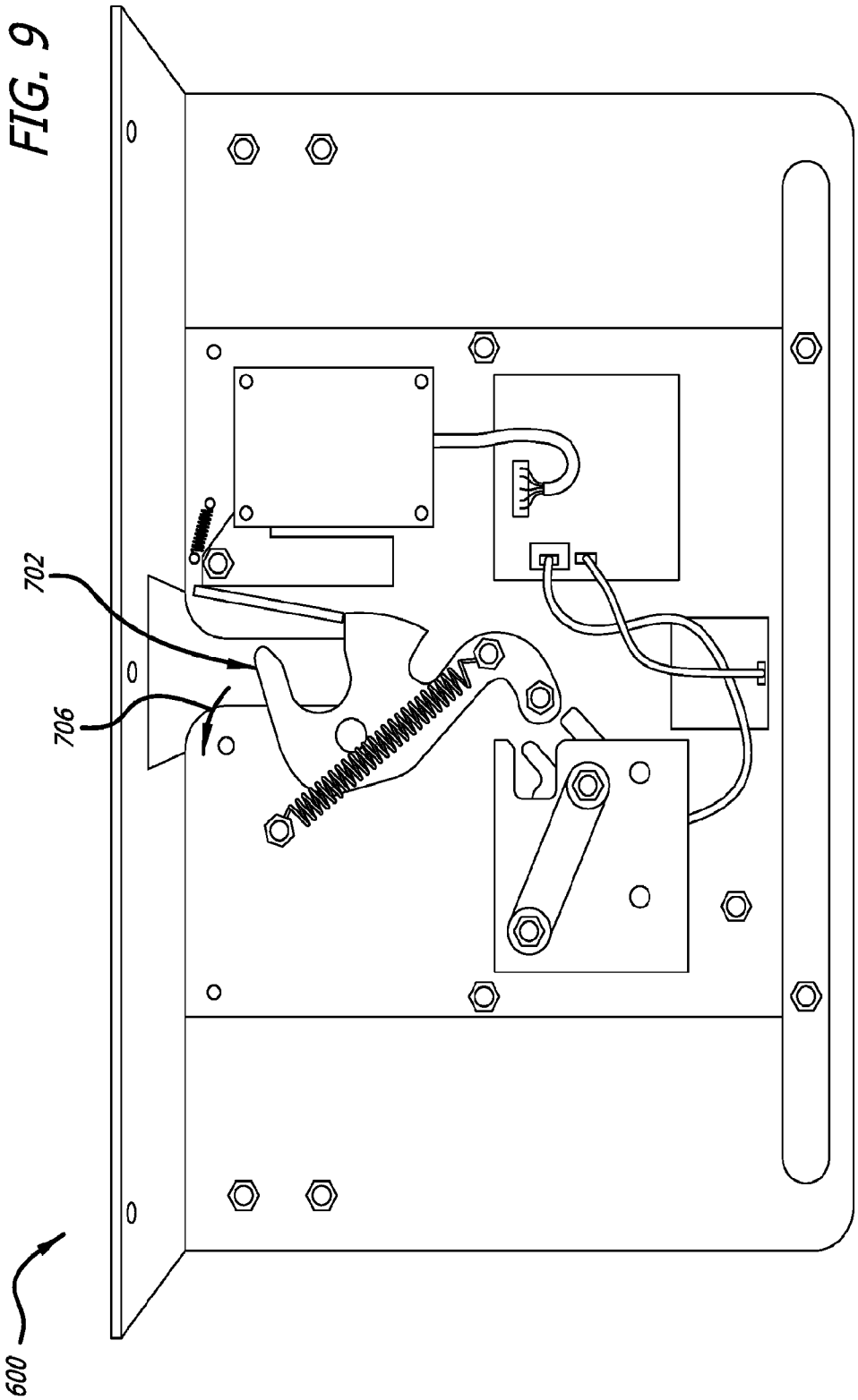

FIG. 10

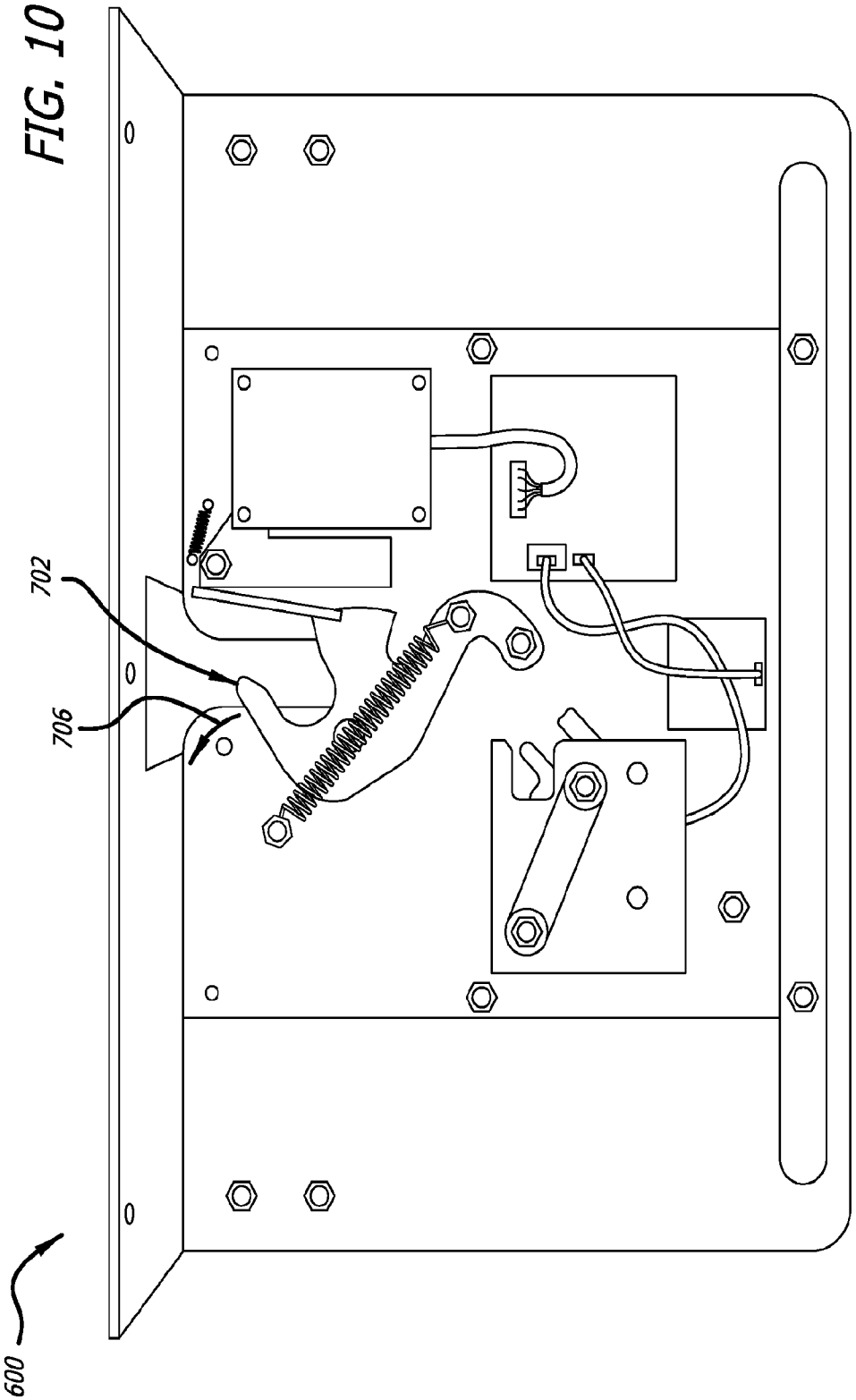

FIG. 11

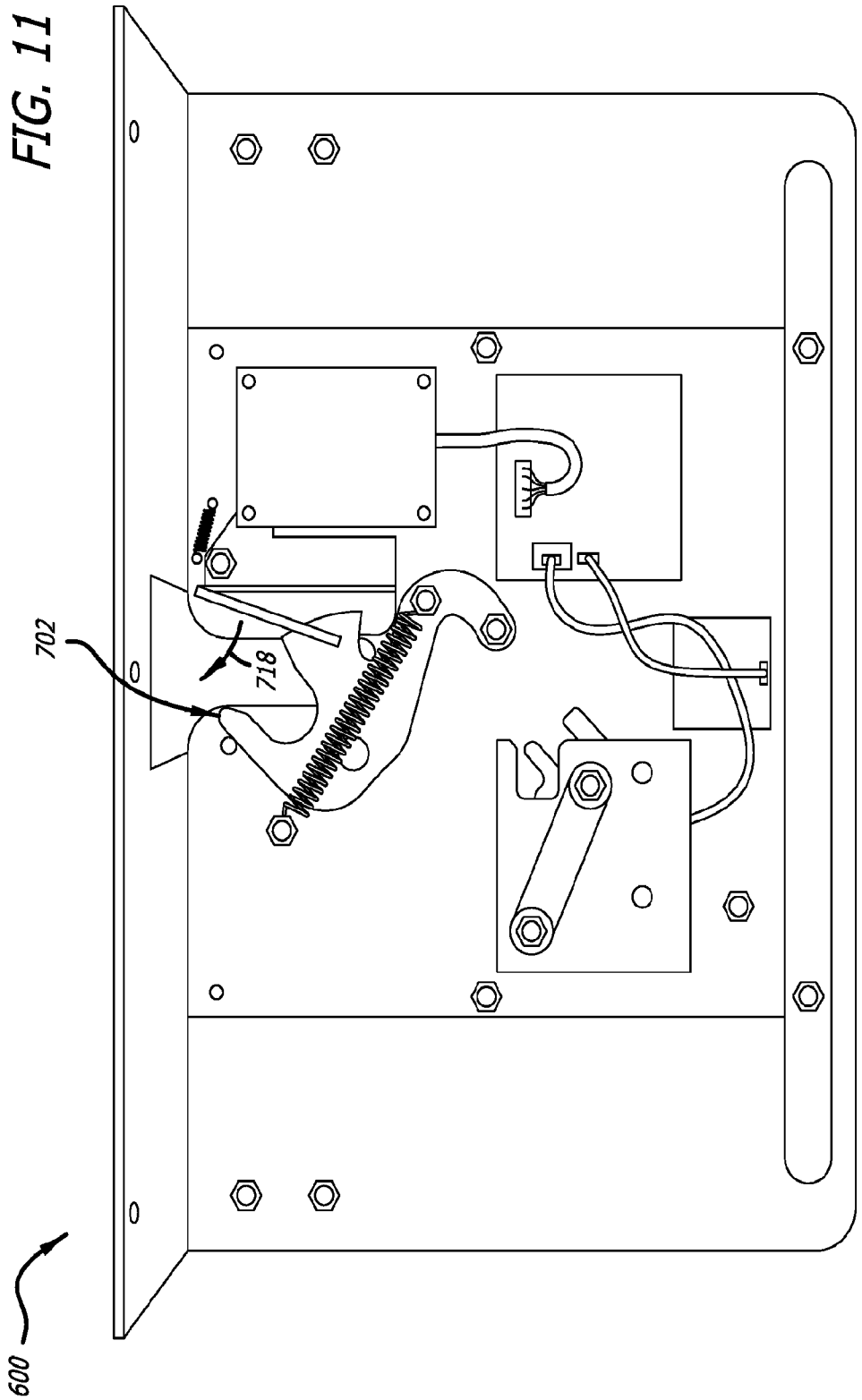

FIG. 12

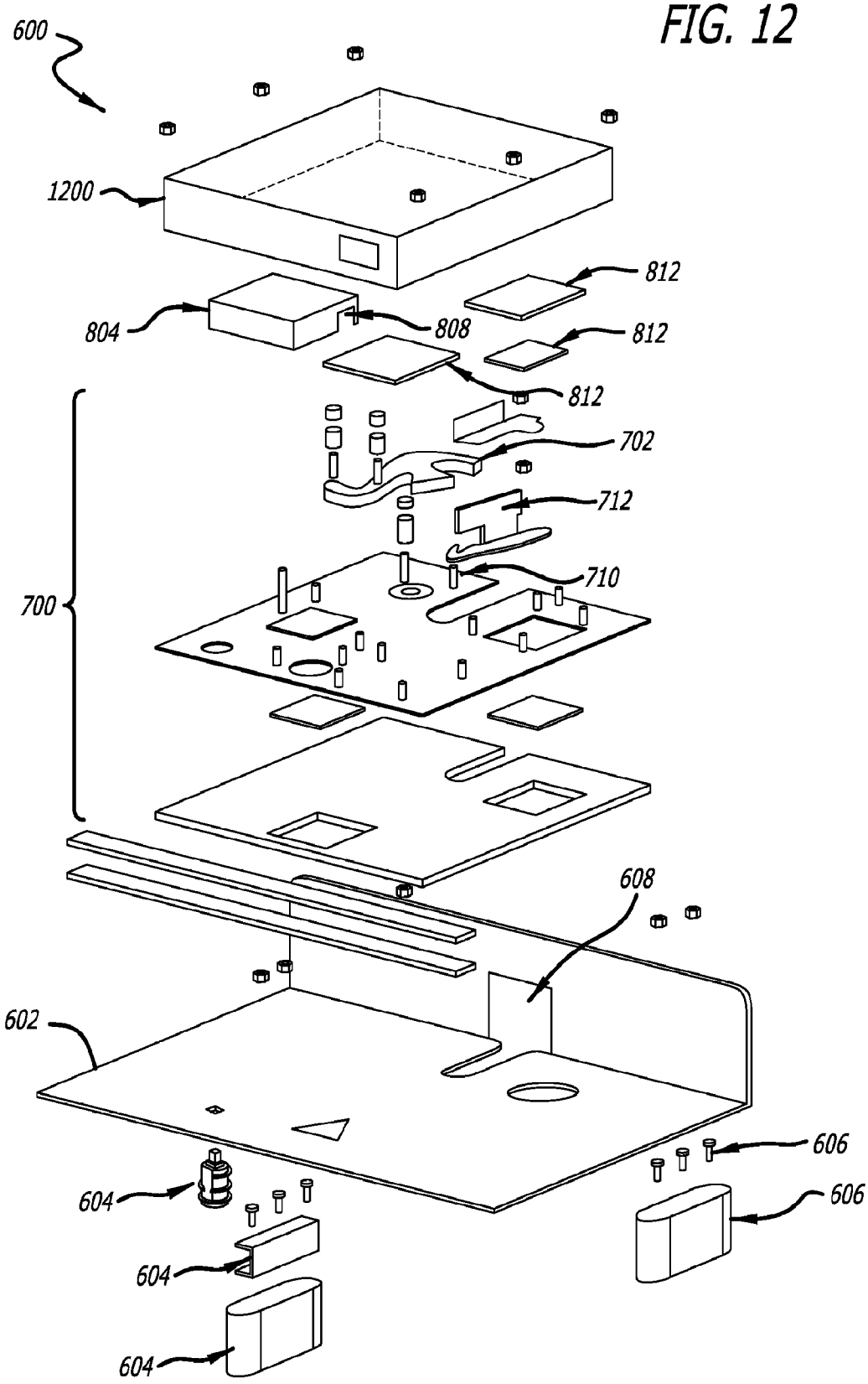
600
1200
812
804
808
812
812
702
712
710
700
608
602
606
606
604
604
604

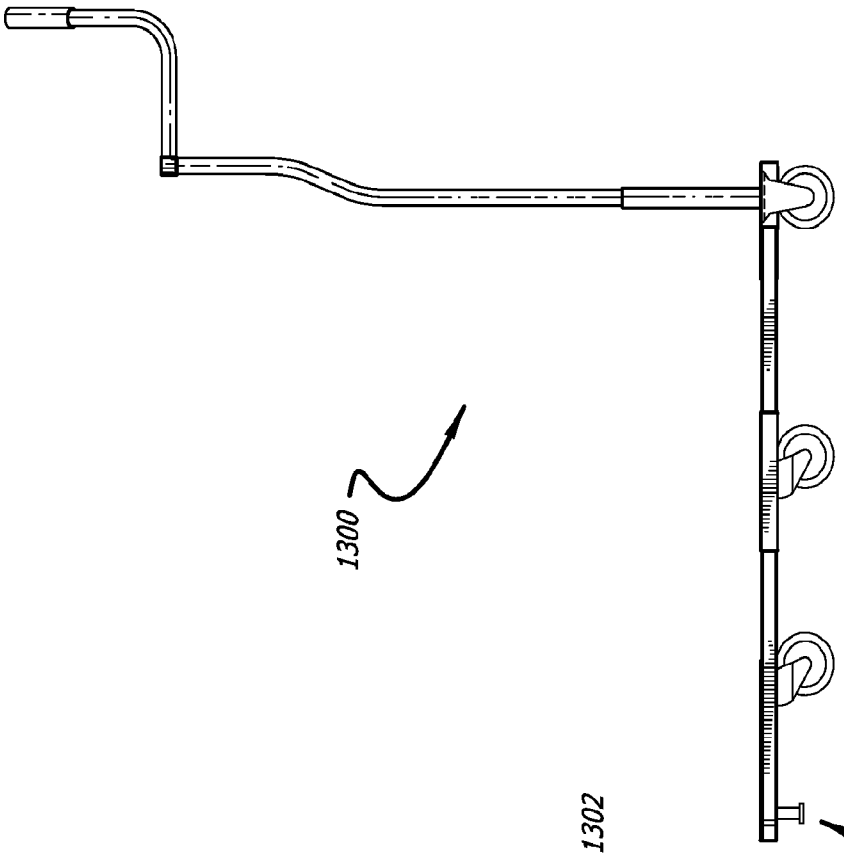

FIG. 14

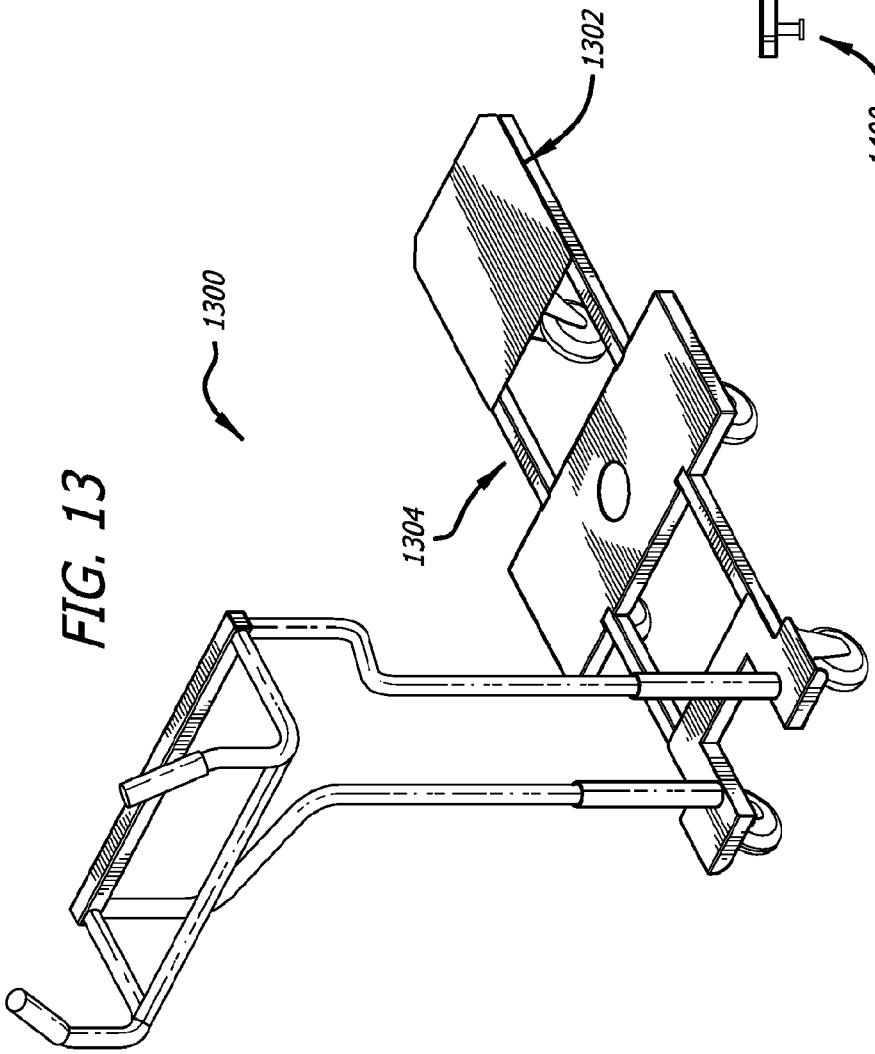

FIG. 13

FIG. 15

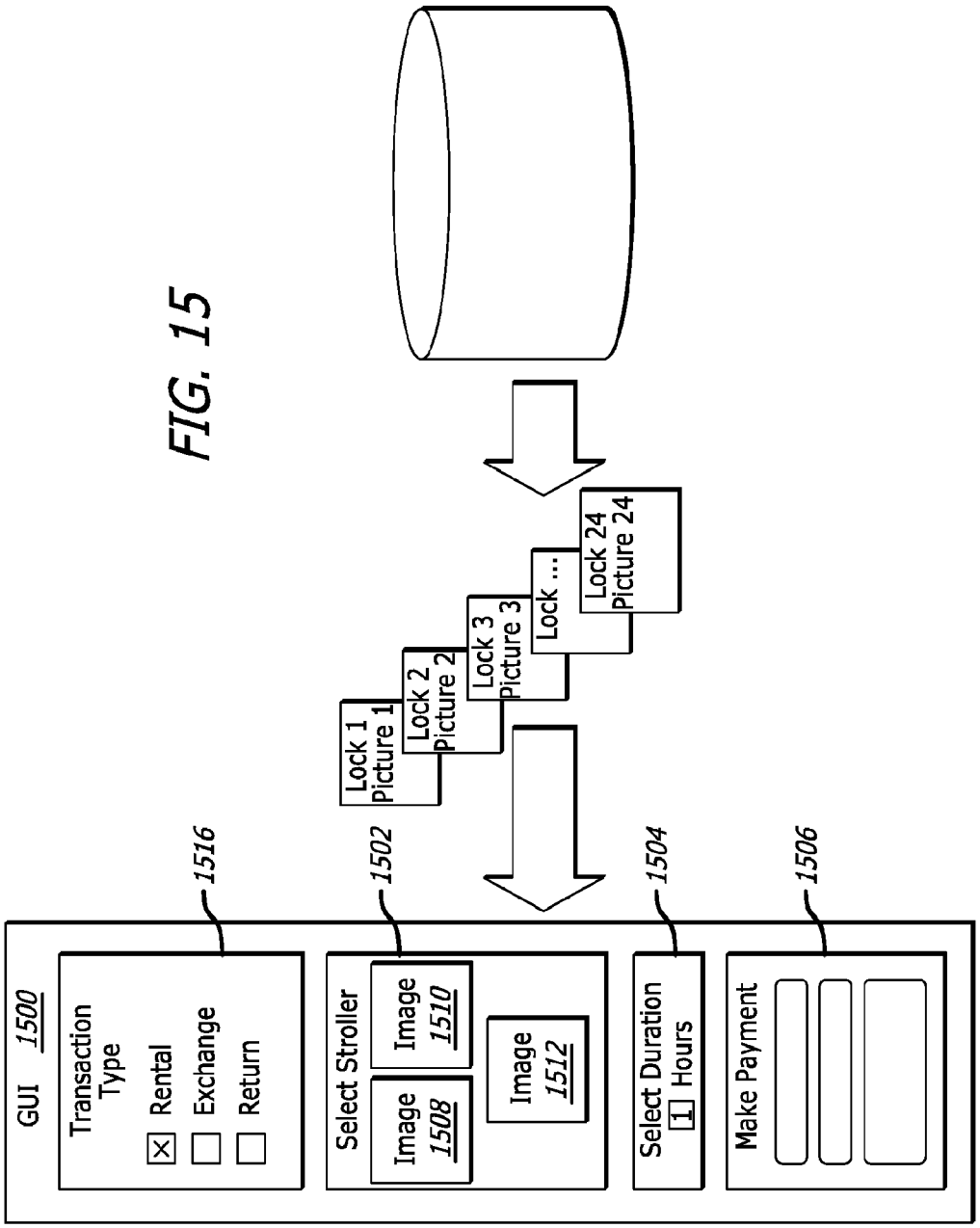
GUI 1500
Transaction Type
☒ Rental
☐ Exchange
☐ Return
1516
Select Stroller
Image 1508
Image 1510
Image 1512
1502
Lock 1 Picture 1
Lock 2 Picture 2
Lock 3 Picture 3
Lock ...
Lock 24 Picture 24
Select Duration
1 Hours
1504
Make Payment
1506

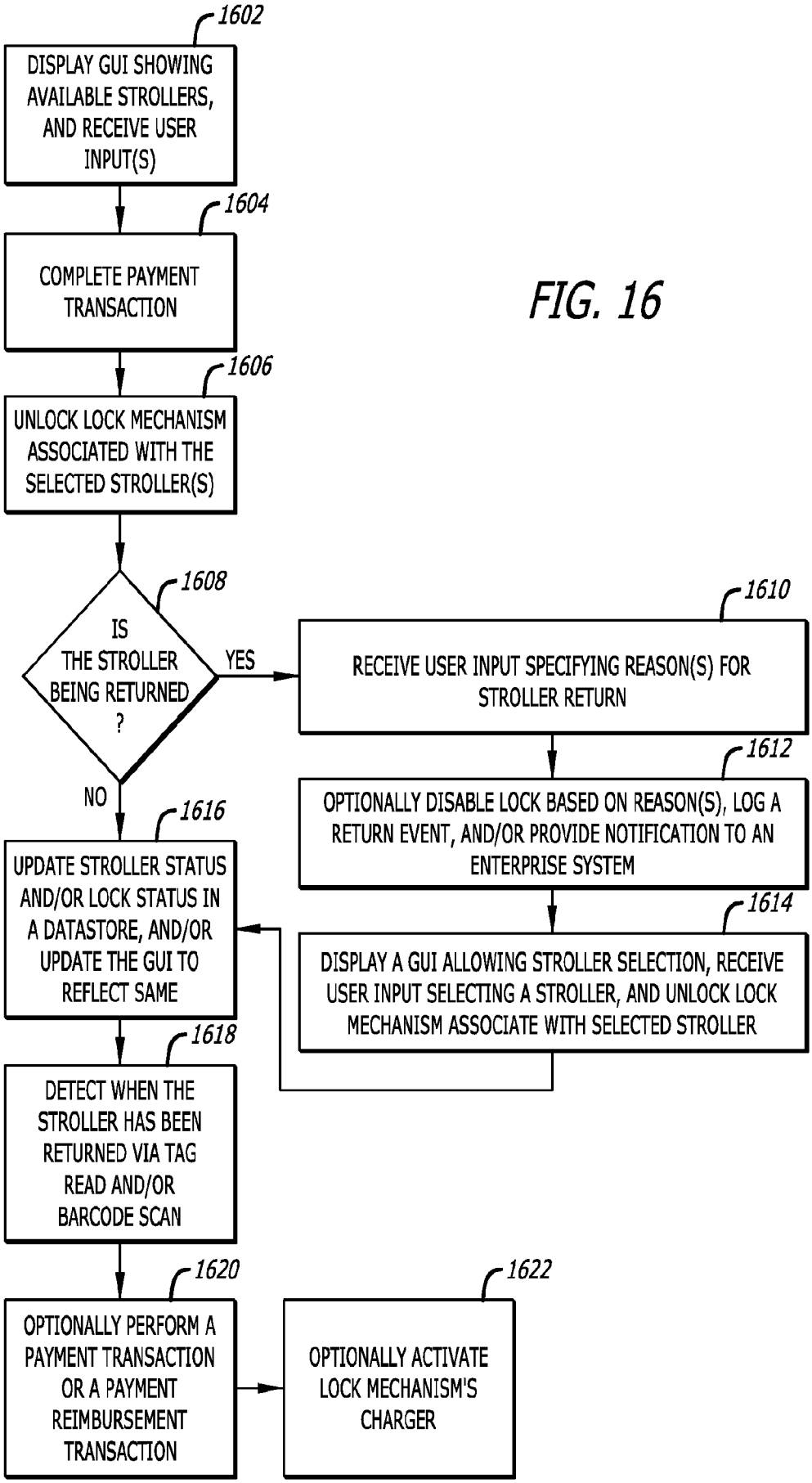
1602
DISPLAY GUI SHOWING AVAILABLE STROLLERS, AND RECEIVE USER INPUT(S)
1604
COMPLETE PAYMENT TRANSACTION
1606
UNLOCK LOCK MECHANISM ASSOCIATED WITH THE SELECTED STROLLER(S)
1608
IS THE STROLLER BEING RETURNED ?
YES
NO
1610
RECEIVE USER INPUT SPECIFYING REASON(S) FOR STROLLER RETURN
1612
OPTIONALLY DISABLE LOCK BASED ON REASON(S), LOG A RETURN EVENT, AND/OR PROVIDE NOTIFICATION TO AN ENTERPRISE SYSTEM
1614
DISPLAY A GUI ALLOWING STROLLER SELECTION, RECEIVE USER INPUT SELECTING A STROLLER, AND UNLOCK LOCK MECHANISM ASSOCIATE WITH SELECTED STROLLER
1616
UPDATE STROLLER STATUS AND/OR LOCK STATUS IN A DATASTORE, AND/OR UPDATE THE GUI TO REFLECT SAME
1618
DETECT WHEN THE STROLLER HAS BEEN RETURNED VIA TAG READ AND/OR BARCODE SCAN
1620
OPTIONALLY PERFORM A PAYMENT TRANSACTION OR A PAYMENT REIMBURSEMENT TRANSACTION
1622
OPTIONALLY ACTIVATE LOCK MECHANISM'S CHARGER

FIG. 16

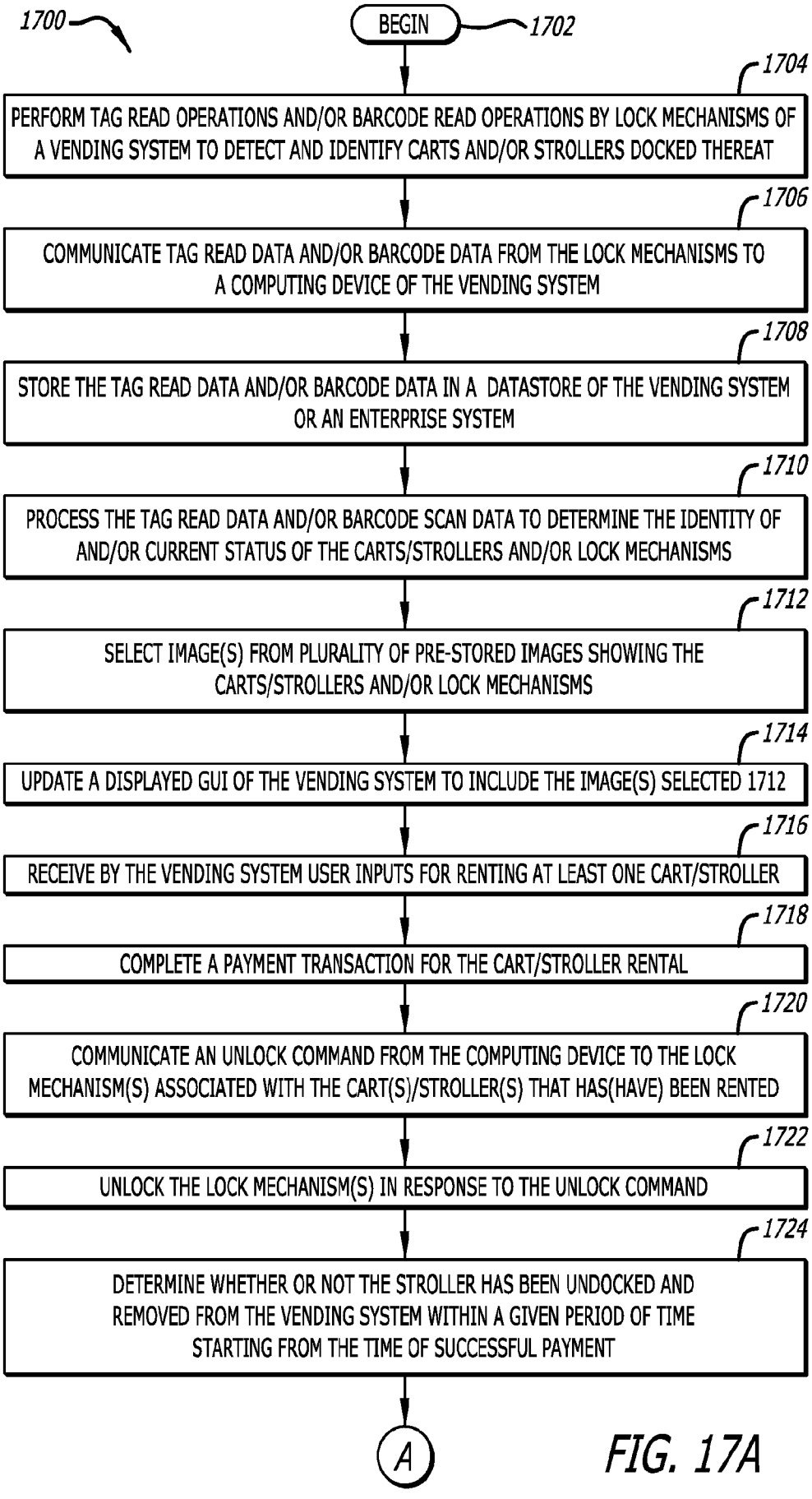
1700
BEGIN
1702
1704
PERFORM TAG READ OPERATIONS AND/OR BARCODE READ OPERATIONS BY LOCK MECHANISMS OF A VENDING SYSTEM TO DETECT AND IDENTIFY CARTS AND/OR STROLLERS DOCKED THEREAT
1706
COMMUNICATE TAG READ DATA AND/OR BARCODE DATA FROM THE LOCK MECHANISMS TO A COMPUTING DEVICE OF THE VENDING SYSTEM
1708
STORE THE TAG READ DATA AND/OR BARCODE DATA IN A DATASTORE OF THE VENDING SYSTEM OR AN ENTERPRISE SYSTEM
1710
PROCESS THE TAG READ DATA AND/OR BARCODE SCAN DATA TO DETERMINE THE IDENTITY OF AND/OR CURRENT STATUS OF THE CARTS/STROLLERS AND/OR LOCK MECHANISMS
1712
SELECT IMAGE(S) FROM PLURALITY OF PRE-STORED IMAGES SHOWING THE CARTS/STROLLERS AND/OR LOCK MECHANISMS
1714
UPDATE A DISPLAYED GUI OF THE VENDING SYSTEM TO INCLUDE THE IMAGE(S) SELECTED 1712
1716
RECEIVE BY THE VENDING SYSTEM USER INPUTS FOR RENTING AT LEAST ONE CART/STROLLER
1718
COMPLETE A PAYMENT TRANSACTION FOR THE CART/STROLLER RENTAL
1720
COMMUNICATE AN UNLOCK COMMAND FROM THE COMPUTING DEVICE TO THE LOCK MECHANISM(S) ASSOCIATED WITH THE CART(S)/STROLLER(S) THAT HAS(HAVE) BEEN RENTED
1722
UNLOCK THE LOCK MECHANISM(S) IN RESPONSE TO THE UNLOCK COMMAND
1724
DETERMINE WHETHER OR NOT THE STROLLER HAS BEEN UNDOCKED AND REMOVED FROM THE VENDING SYSTEM WITHIN A GIVEN PERIOD OF TIME STARTING FROM THE TIME OF SUCCESSFUL PAYMENT
A
Go To FIG. 17B

FIG. 17A

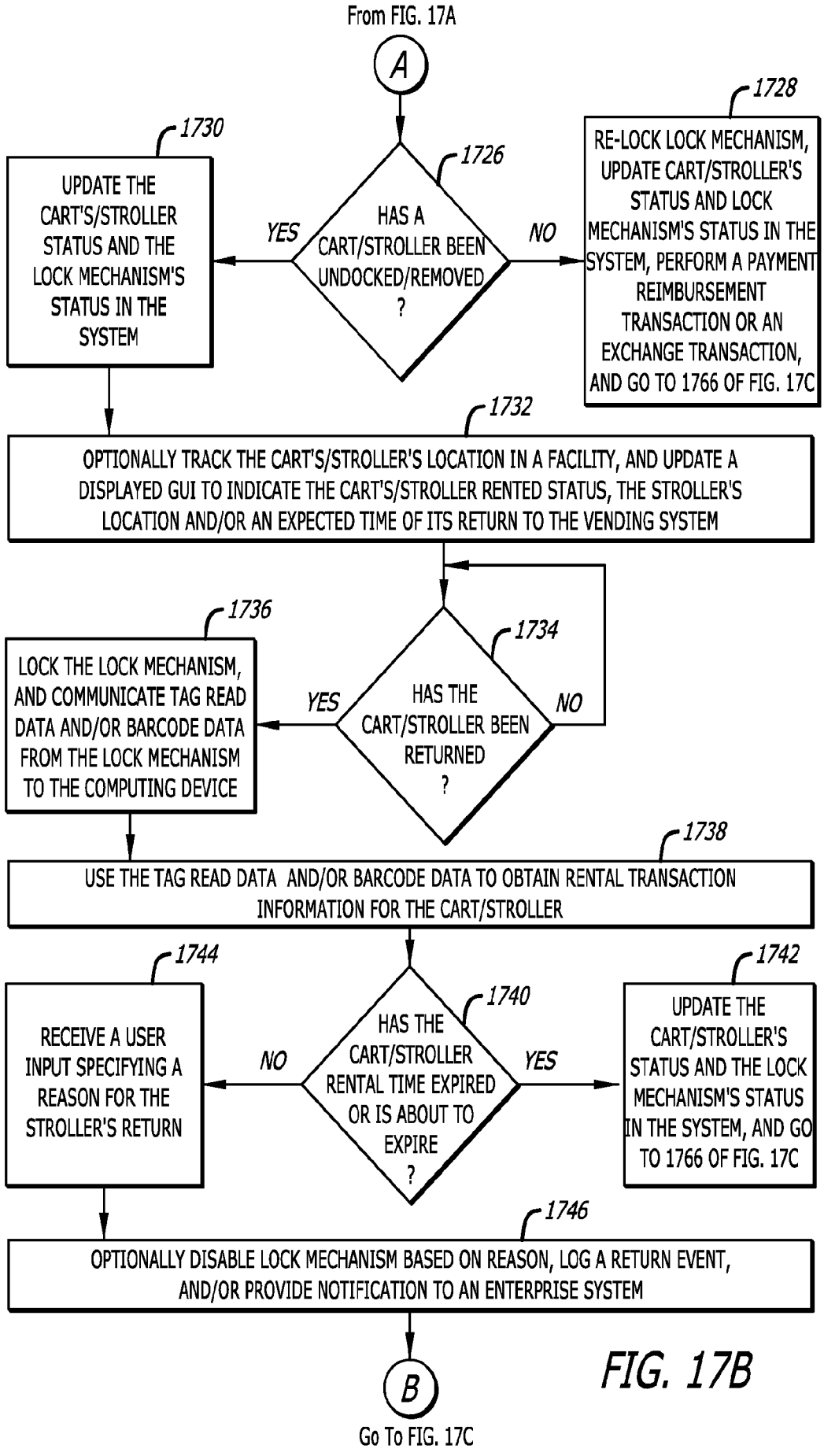
From FIG. 17A
A
1726
HAS A CART/STROLLER BEEN UNDOCKED/REMOVED ?
YES
NO
1730
UPDATE THE CART'S/STROLLER STATUS AND THE LOCK MECHANISM'S STATUS IN THE SYSTEM
1728
RE-LOCK LOCK MECHANISM, UPDATE CART/STROLLER'S STATUS AND LOCK MECHANISM'S STATUS IN THE SYSTEM, PERFORM A PAYMENT REIMBURSEMENT TRANSACTION OR AN EXCHANGE TRANSACTION, AND GO TO 1766 OF FIG. 17C
1732
OPTIONALLY TRACK THE CART'S/STROLLER'S LOCATION IN A FACILITY, AND UPDATE A DISPLAYED GUI TO INDICATE THE CART'S/STROLLER RENTED STATUS, THE STROLLER'S LOCATION AND/OR AN EXPECTED TIME OF ITS RETURN TO THE VENDING SYSTEM
1734
HAS THE CART/STROLLER BEEN RETURNED ?
YES
NO
1736
LOCK THE LOCK MECHANISM, AND COMMUNICATE TAG READ DATA AND/OR BARCODE DATA FROM THE LOCK MECHANISM TO THE COMPUTING DEVICE
1738
USE THE TAG READ DATA AND/OR BARCODE DATA TO OBTAIN RENTAL TRANSACTION INFORMATION FOR THE CART/STROLLER
1740
HAS THE CART/STROLLER RENTAL TIME EXPIRED OR IS ABOUT TO EXPIRE ?
NO
YES
1744
RECEIVE A USER INPUT SPECIFYING A REASON FOR THE STROLLER'S RETURN
1742
UPDATE THE CART/STROLLER'S STATUS AND THE LOCK MECHANISM'S STATUS IN THE SYSTEM, AND GO TO 1766 OF FIG. 17C
1746
OPTIONALLY DISABLE LOCK MECHANISM BASED ON REASON, LOG A RETURN EVENT, AND/OR PROVIDE NOTIFICATION TO AN ENTERPRISE SYSTEM
B
Go To FIG. 17C

FIG. 17B

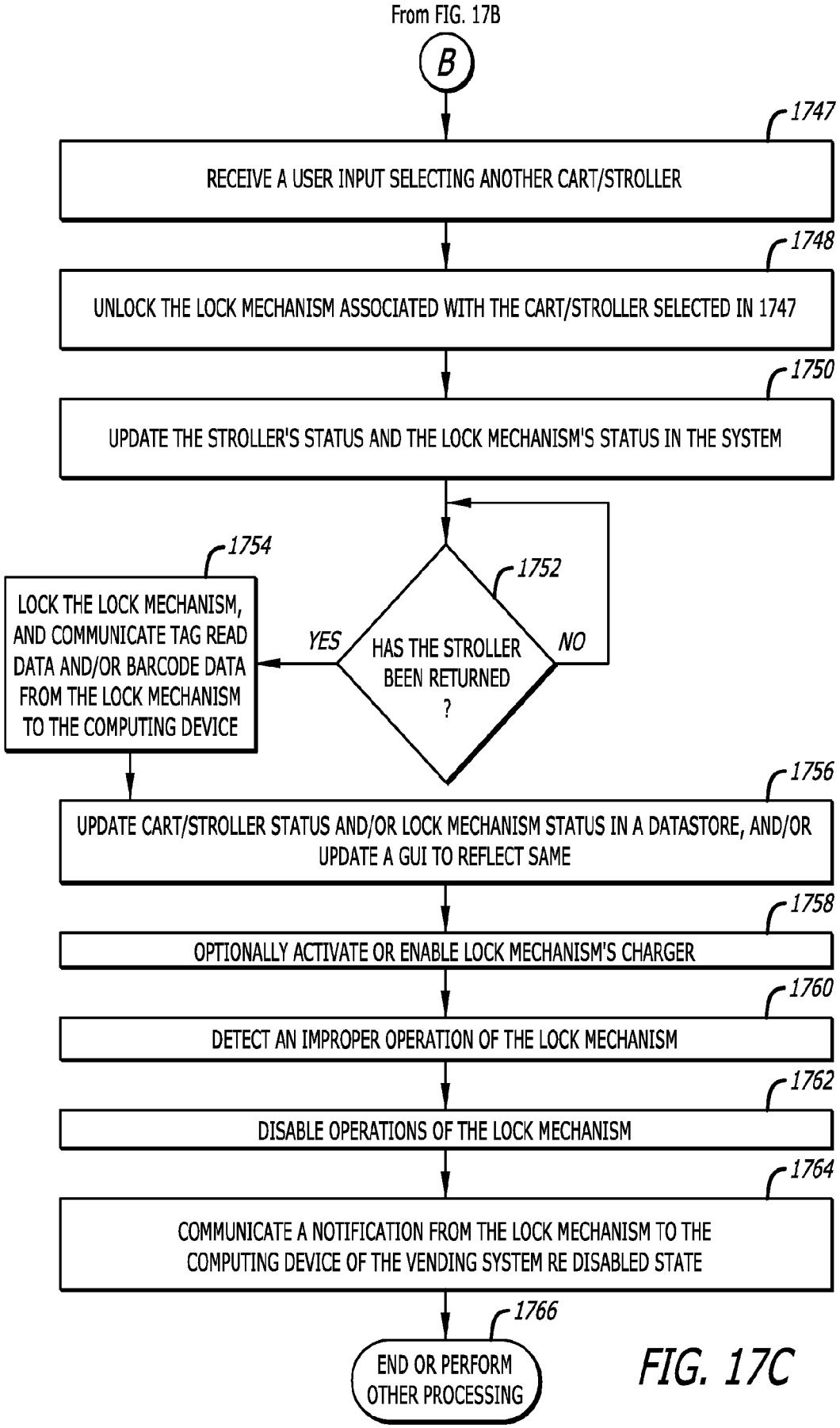
From FIG. 17B
B
1747
RECEIVE A USER INPUT SELECTING ANOTHER CART/STROLLER
1748
UNLOCK THE LOCK MECHANISM ASSOCIATED WITH THE CART/STROLLER SELECTED IN 1747
1750
UPDATE THE STROLLER'S STATUS AND THE LOCK MECHANISM'S STATUS IN THE SYSTEM
1752
HAS THE STROLLER BEEN RETURNED ?
YES
NO
1754
LOCK THE LOCK MECHANISM, AND COMMUNICATE TAG READ DATA AND/OR BARCODE DATA FROM THE LOCK MECHANISM TO THE COMPUTING DEVICE
1756
UPDATE CART/STROLLER STATUS AND/OR LOCK MECHANISM STATUS IN A DATASTORE, AND/OR UPDATE A GUI TO REFLECT SAME
1758
OPTIONALLY ACTIVATE OR ENABLE LOCK MECHANISM'S CHARGER
1760
DETECT AN IMPROPER OPERATION OF THE LOCK MECHANISM
1762
DISABLE OPERATIONS OF THE LOCK MECHANISM
1764
COMMUNICATE A NOTIFICATION FROM THE LOCK MECHANISM TO THE COMPUTING DEVICE OF THE VENDING SYSTEM RE DISABLED STATE
1766
END OR PERFORM OTHER PROCESSING

FIG. 17C

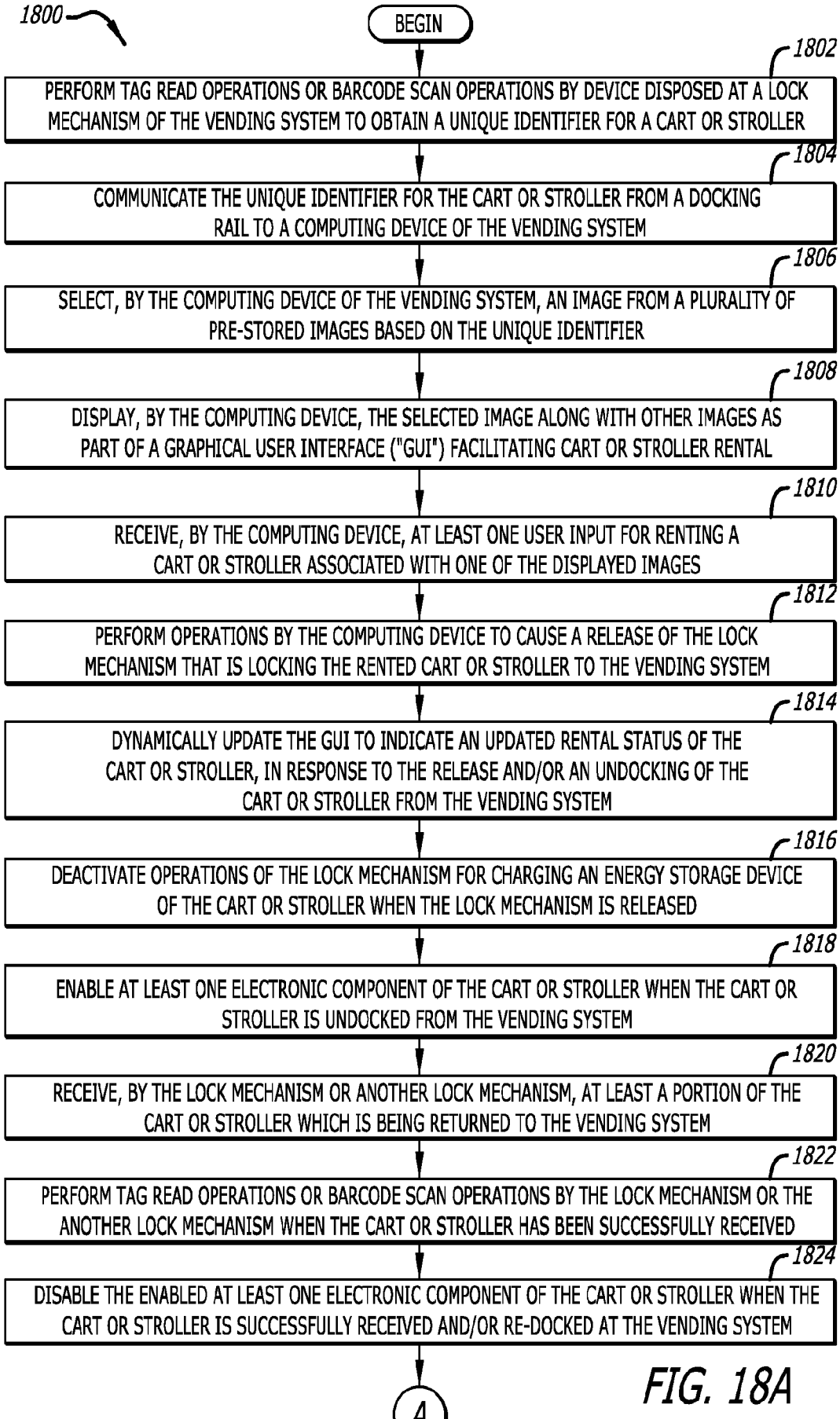
1800
BEGIN
1802
PERFORM TAG READ OPERATIONS OR BARCODE SCAN OPERATIONS BY DEVICE DISPOSED AT A LOCK MECHANISM OF THE VENDING SYSTEM TO OBTAIN A UNIQUE IDENTIFIER FOR A CART OR STROLLER
1804
COMMUNICATE THE UNIQUE IDENTIFIER FOR THE CART OR STROLLER FROM A DOCKING RAIL TO A COMPUTING DEVICE OF THE VENDING SYSTEM
1806
SELECT, BY THE COMPUTING DEVICE OF THE VENDING SYSTEM, AN IMAGE FROM A PLURALITY OF PRE-STORED IMAGES BASED ON THE UNIQUE IDENTIFIER
1808
DISPLAY, BY THE COMPUTING DEVICE, THE SELECTED IMAGE ALONG WITH OTHER IMAGES AS PART OF A GRAPHICAL USER INTERFACE ("GUI") FACILITATING CART OR STROLLER RENTAL
1810
RECEIVE, BY THE COMPUTING DEVICE, AT LEAST ONE USER INPUT FOR RENTING A CART OR STROLLER ASSOCIATED WITH ONE OF THE DISPLAYED IMAGES
1812
PERFORM OPERATIONS BY THE COMPUTING DEVICE TO CAUSE A RELEASE OF THE LOCK MECHANISM THAT IS LOCKING THE RENTED CART OR STROLLER TO THE VENDING SYSTEM
1814
DYNAMICALLY UPDATE THE GUI TO INDICATE AN UPDATED RENTAL STATUS OF THE CART OR STROLLER, IN RESPONSE TO THE RELEASE AND/OR AN UNDOCKING OF THE CART OR STROLLER FROM THE VENDING SYSTEM
1816
DEACTIVATE OPERATIONS OF THE LOCK MECHANISM FOR CHARGING AN ENERGY STORAGE DEVICE OF THE CART OR STROLLER WHEN THE LOCK MECHANISM IS RELEASED
1818
ENABLE AT LEAST ONE ELECTRONIC COMPONENT OF THE CART OR STROLLER WHEN THE CART OR STROLLER IS UNDOCKED FROM THE VENDING SYSTEM
1820
RECEIVE, BY THE LOCK MECHANISM OR ANOTHER LOCK MECHANISM, AT LEAST A PORTION OF THE CART OR STROLLER WHICH IS BEING RETURNED TO THE VENDING SYSTEM
1822
PERFORM TAG READ OPERATIONS OR BARCODE SCAN OPERATIONS BY THE LOCK MECHANISM OR THE ANOTHER LOCK MECHANISM WHEN THE CART OR STROLLER HAS BEEN SUCCESSFULLY RECEIVED
1824
DISABLE THE ENABLED AT LEAST ONE ELECTRONIC COMPONENT OF THE CART OR STROLLER WHEN THE CART OR STROLLER IS SUCCESSFULLY RECEIVED AND/OR RE-DOCKED AT THE VENDING SYSTEM
A
Go To FIG. 18B

FIG. 18A

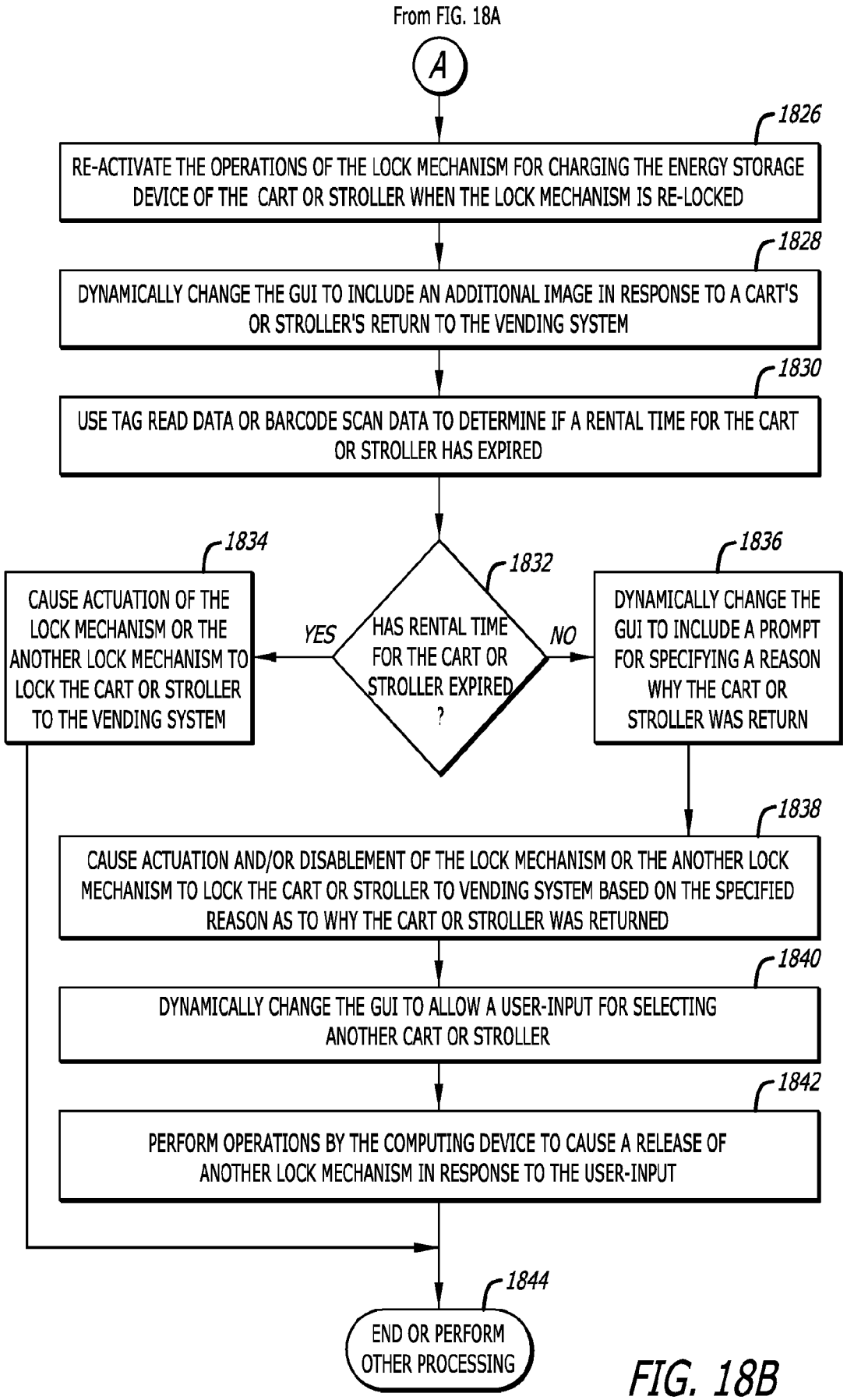
From FIG. 18A
A
1826
RE-ACTIVATE THE OPERATIONS OF THE LOCK MECHANISM FOR CHARGING THE ENERGY STORAGE DEVICE OF THE CART OR STROLLER WHEN THE LOCK MECHANISM IS RE-LOCKED
1828
DYNAMICALLY CHANGE THE GUI TO INCLUDE AN ADDITIONAL IMAGE IN RESPONSE TO A CART'S OR STROLLER'S RETURN TO THE VENDING SYSTEM
1830
USE TAG READ DATA OR BARCODE SCAN DATA TO DETERMINE IF A RENTAL TIME FOR THE CART OR STROLLER HAS EXPIRED
1832
HAS RENTAL TIME FOR THE CART OR STROLLER EXPIRED ?
YES
NO
1834
CAUSE ACTUATION OF THE LOCK MECHANISM OR THE ANOTHER LOCK MECHANISM TO LOCK THE CART OR STROLLER TO THE VENDING SYSTEM
1836
DYNAMICALLY CHANGE THE GUI TO INCLUDE A PROMPT FOR SPECIFYING A REASON WHY THE CART OR STROLLER WAS RETURN
1838
CAUSE ACTUATION AND/OR DISABLEMENT OF THE LOCK MECHANISM OR THE ANOTHER LOCK MECHANISM TO LOCK THE CART OR STROLLER TO VENDING SYSTEM BASED ON THE SPECIFIED REASON AS TO WHY THE CART OR STROLLER WAS RETURNED
1840
DYNAMICALLY CHANGE THE GUI TO ALLOW A USER-INPUT FOR SELECTING ANOTHER CART OR STROLLER
1842
PERFORM OPERATIONS BY THE COMPUTING DEVICE TO CAUSE A RELEASE OF ANOTHER LOCK MECHANISM IN RESPONSE TO THE USER-INPUT
1844
END OR PERFORM OTHER PROCESSING

FIG. 18B

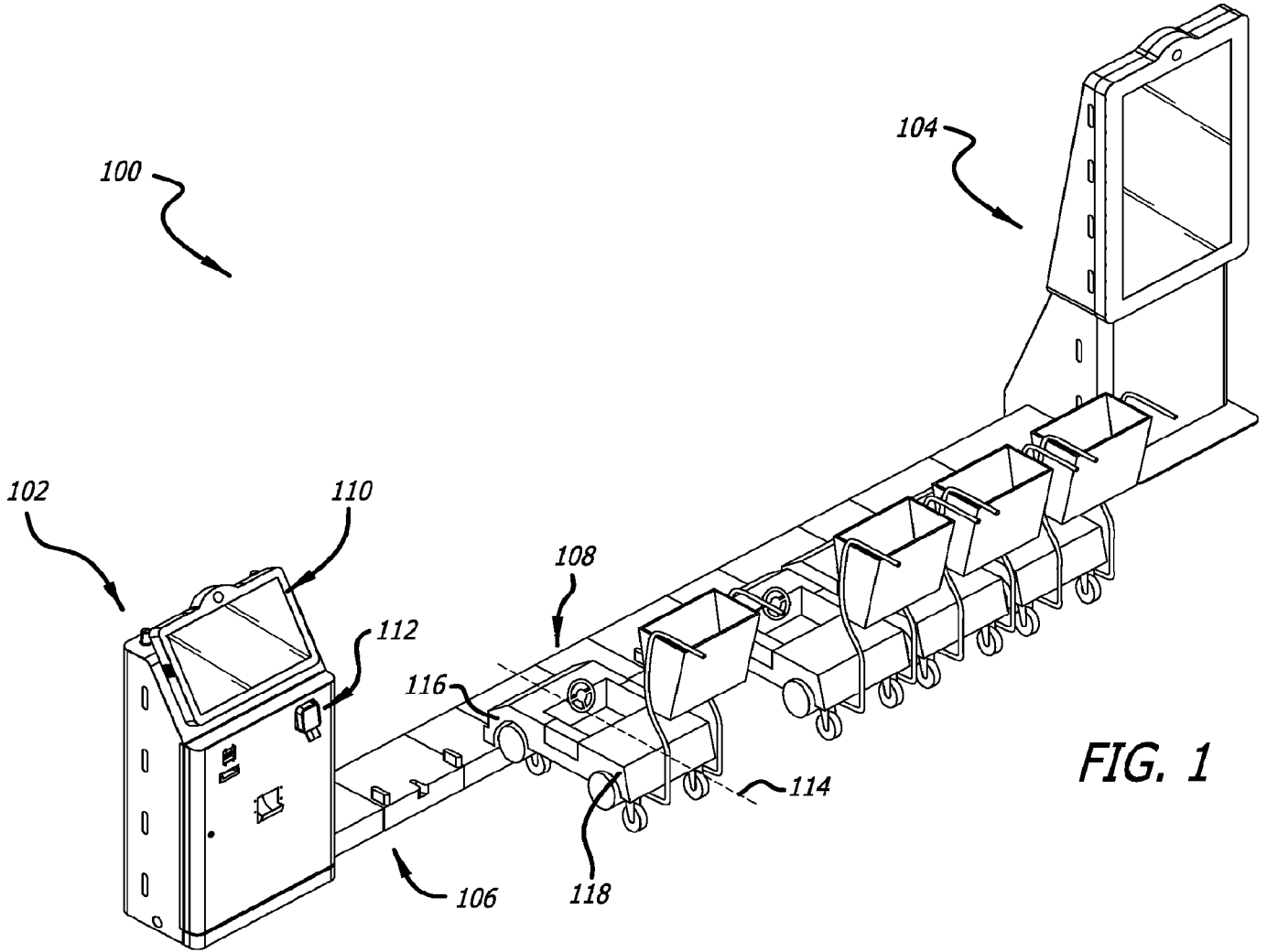

FIG. 1