(12) INTERNATIONAL APPLICATION PUBLISHED UNDER THE PATENT COOPERATION TREATY (PCT)

(19) World Intellectual Property Organization
International Bureau

(43) International Publication Date
20 November 2014 (20.11.2014)

WIPO | PCT

(10) International Publication Number
WO 2014/185855 A3

(51) International Patent Classification:
E21B 4/06 (2006.01) *E21B 17/03* (2006.01)
E21B 10/36 (2006.01)

(21) International Application Number:
PCT/SE2014/050599

(22) International Filing Date:
16 May 2014 (16.05.2014)

(25) Filing Language: English

(26) Publication Language: English

(30) Priority Data:
1350606-8 17 May 2013 (17.05.2013) SE

(71) Applicant: **ATLAS COPCO SECOROC AB** [SE/SE]; Box 521, S-737 25 Fagersta (SE).

(72) Inventor: **CARLSSON, Jimmy**; Middagsberget 4, S-737 91 Fagersta (SE).

(74) Agent: **EHRNER & DELMAR PATENTBYRÅ AB**; Box 10316, S-100 55 Stockholm (SE).

(81) Designated States *(unless otherwise indicated, for every kind of national protection available)*: AE, AG, AL, AM, AO, AT, AU, AZ, BA, BB, BG, BH, BN, BR, BW, BY, BZ, CA, CH, CL, CN, CO, CR, CU, CZ, DE, DK, DM, DO, DZ, EC, EE, EG, ES, FI, GB, GD, GE, GH, GM, GT, HN, HR, HU, ID, IL, IN, IR, IS, JP, KE, KG, KN, KP, KR, KZ, LA, LC, LK, LR, LS, LT, LU, LY, MA, MD, ME, MG, MK, MN, MW, MX, MY, MZ, NA, NG, NI, NO, NZ, OM, PA, PE, PG, PH, PL, PT, QA, RO, RS, RU, RW, SA, SC, SD, SE, SG, SK, SL, SM, ST, SV, SY, TH, TJ, TM, TN, TR, TT, TZ, UA, UG, US, UZ, VC, VN, ZA, ZM, ZW.

(84) Designated States *(unless otherwise indicated, for every kind of regional protection available)*: ARIPO (BW, GH, GM, KE, LR, LS, MW, MZ, NA, RW, SD, SL, SZ, TZ, UG, ZM, ZW), Eurasian (AM, AZ, BY, KG, KZ, RU, TJ, TM), European (AL, AT, BE, BG, CH, CY, CZ, DE, DK, EE, ES, FI, FR, GB, GR, HR, HU, IE, IS, IT, LT, LU, LV, MC, MK, MT, NL, NO, PL, PT, RO, RS, SE, SI, SK, SM, TR), OAPI (BF, BJ, CF, CG, CI, CM, GA, GN, GQ, GW, KM, ML, MR, NE, SN, TD, TG).

Published:

— *with international search report (Art. 21(3))*

— *before the expiration of the time limit for amending the claims and to be republished in the event of receipt of amendments (Rule 48.2(h))*

(88) Date of publication of the international search report:
9 April 2015

(54) Title: DEVICE AND SYSTEM FOR PERCUSSION ROCK DRILLING

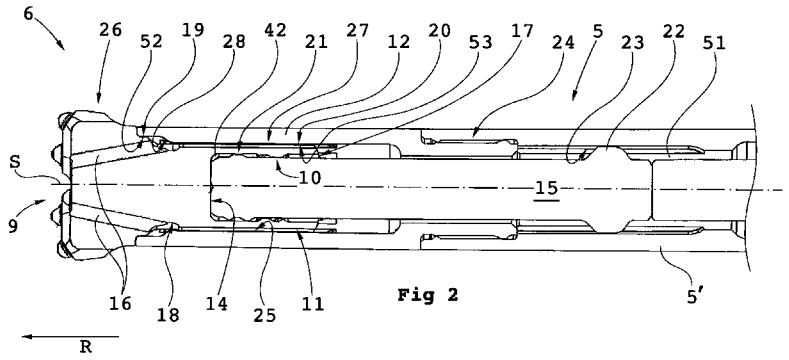

Fig 2

(57) Abstract: A drill bit (6) for percussion rock drilling including: - an impact portion (26) with an impact surface (9) for striking against rock in an impact direction (R), - an engagement portion (27) with: i) holder means (10) for holding the drill bit axially in a drill head of a drill string, and ii) rotation engagement means (11) for connecting the drill bit with the drill head for the purpose of rotation of the drill bit (6), - an anvil surface (14) being directed opposite to the impact direction for receiving shock waves from a striker rod (15) of the drill string, and - flushing channel means for transfer of flushing fluid to the impact surface (9). The holder means (10) and the anvil surface (14) are inside a holder recess (17) having an opening that is directed opposite to the impact direction (R). The invention also concerns a drill string component, a system and a method.

WO 2014/185855 A3

INTERNATIONAL SEARCH REPORT

International application No
PCT/SE2014/050599

A. CLASSIFICATION OF SUBJECT MATTER
INV. E21B4/06 E21B10/36 E21B17/03
ADD.

According to International Patent Classification (IPC) or to both national classification and IPC

B. FIELDS SEARCHED

Minimum documentation searched (classification system followed by classification symbols)
E21B

Documentation searched other than minimum documentation to the extent that such documents are included in the fields searched

Electronic data base consulted during the international search (name of data base and, where practicable, search terms used)
EPO-Internal, WPI Data

C. DOCUMENTS CONSIDERED TO BE RELEVANT

Category*	Citation of document, with indication, where appropriate, of the relevant passages	Relevant to claim No.
X	US 2008/078584 A1 (LYON LELAND H [US]) 3 April 2008 (2008-04-03) cited in the application	1-3
A	abstract figures 1-4 paragraphs [0031], [0035]	4-25
A	US 2004/188146 A1 (EGERSTROM FREDRIK [SE]) 30 September 2004 (2004-09-30) abstract figure 1c paragraphs [0018], [0051]	1-25

-/--

[X] Further documents are listed in the continuation of Box C.

[X] See patent family annex.

* Special categories of cited documents :

"A" document defining the general state of the art which is not considered to be of particular relevance

"E" earlier application or patent but published on or after the international filing date

"L" document which may throw doubts on priority claim(s) or which is cited to establish the publication date of another citation or other special reason (as specified)

"O" document referring to an oral disclosure, use, exhibition or other means

"P" document published prior to the international filing date but later than the priority date claimed

"T" later document published after the international filing date or priority date and not in conflict with the application but cited to understand the principle or theory underlying the invention

"X" document of particular relevance; the claimed invention cannot be considered novel or cannot be considered to involve an inventive step when the document is taken alone

"Y" document of particular relevance; the claimed invention cannot be considered to involve an inventive step when the document is combined with one or more other such documents, such combination being obvious to a person skilled in the art

"&" document member of the same patent family

Date of the actual completion of the international search	Date of mailing of the international search report
13 February 2015	20/02/2015

Name and mailing address of the ISA/	Authorized officer
European Patent Office, P.B. 5818 Patentlaan 2 NL - 2280 HV Rijswijk Tel. (+31-70) 340-2040, Fax: (+31-70) 340-3016	Wehland, Florian

1

Form PCT/ISA/210 (second sheet) (April 2005)

INTERNATIONAL SEARCH REPORT

International application No
PCT/SE2014/050599

C(Continuation). DOCUMENTS CONSIDERED TO BE RELEVANT

Category*	Citation of document, with indication, where appropriate, of the relevant passages	Relevant to claim No.
A	US 2001/018990 A1 (ASBERG BENGT [SE] ET AL AASBERG BENGT [SE] ET AL) 6 September 2001 (2001-09-06) abstract figures 1,4 paragraph [0023] paragraph [0024] -----	1-25

1

INTERNATIONAL SEARCH REPORT

Information on patent family members

International application No
PCT/SE2014/050599

Patent document cited in search report	Publication date	Patent family member(s)	Publication date
US 2008078584 A1	03-04-2008	US 2008078584 A1	03-04-2008
		WO 2008042258 A2	10-04-2008
US 2004188146 A1	30-09-2004	AT 375433 T	15-10-2007
		AU 2004223480 A1	07-10-2004
		CA 2516476 A1	07-10-2004
		CN 1756888 A	05-04-2006
		DE 602004009427 T2	24-07-2008
		DK 1611310 T3	11-02-2008
		EP 1611310 A1	04-01-2006
		ES 2297401 T3	01-05-2008
		HK 1089219 A1	18-07-2008
		JP 4459225 B2	28-04-2010
		JP 2006521481 A	21-09-2006
		KR 20050122219 A	28-12-2005
		PT 1611310 E	29-01-2008
		SE 0300836 A	27-09-2004
		US 2004188146 A1	30-09-2004
		WO 2004085791 A1	07-10-2004
		ZA 200506361 A	28-03-2007
US 2001018990 A1	06-09-2001	AU 778724 B2	16-12-2004
		AU 3628101 A	12-09-2001
		BR 0108795 A	31-12-2002
		CA 2397146 A1	07-09-2001
		CN 1406309 A	26-03-2003
		EP 1259697 A1	27-11-2002
		JP 2003525372 A	26-08-2003
		MX PA02008445 A	28-01-2003
		NO 20024125 A	29-08-2002
		PL 357778 A1	26-07-2004
		SE 514931 C2	21-05-2001
		US 2001018990 A1	06-09-2001
		WO 0165051 A1	07-09-2001
		ZA 200205239 A	29-09-2003