A. H. WEISS.

SWITCHING DEVICE.

APPLICATION FILED DEC. 26, 1912.

1,224,517.

Patented May 1, 1917.

2 SHEETS—SHEET 1.

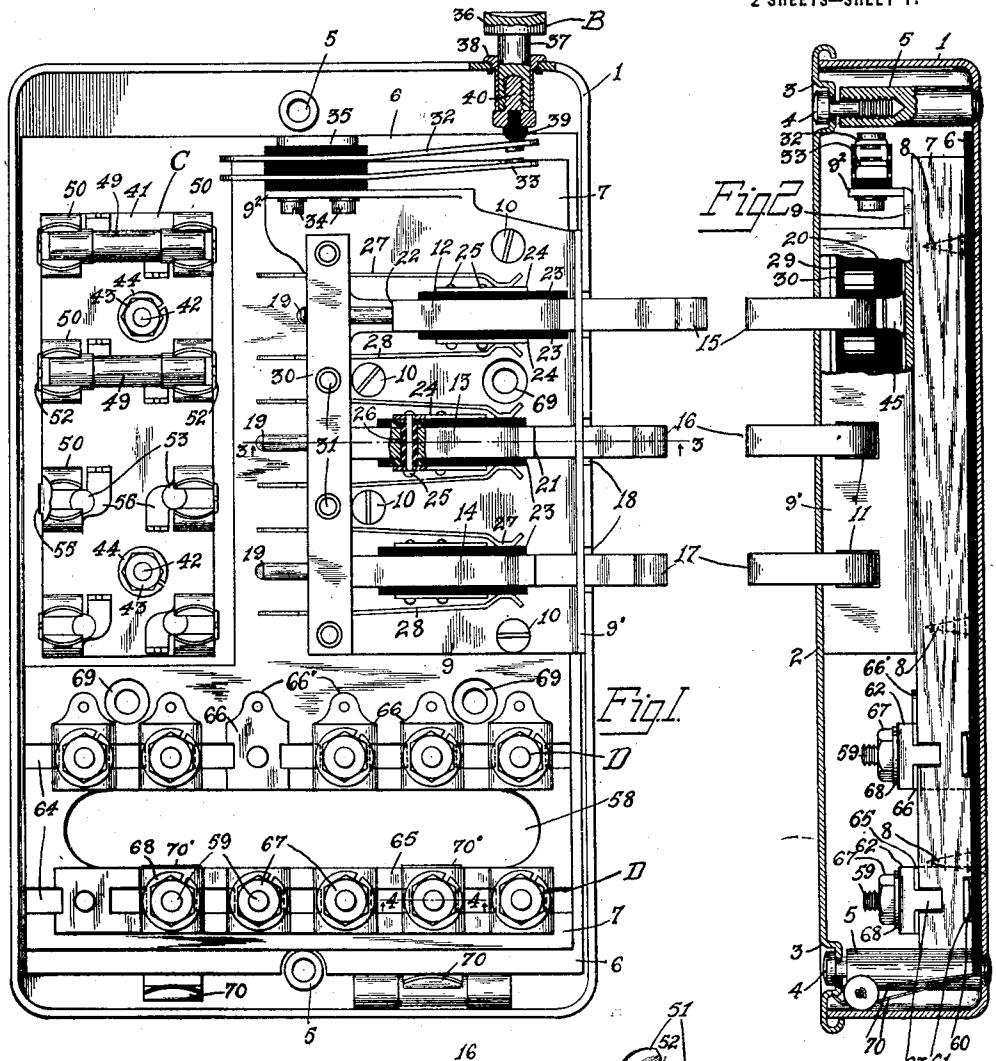

Fig. 1.

Fig. 2.

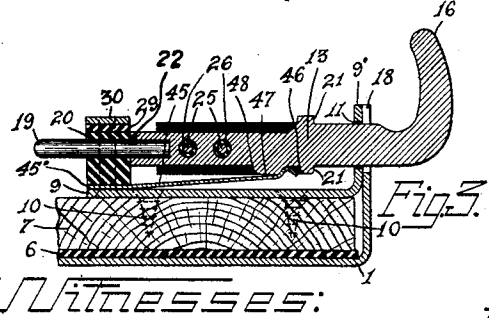

Fig. 3.

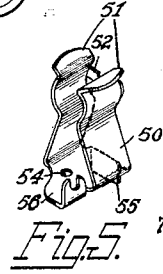

Fig. 5.

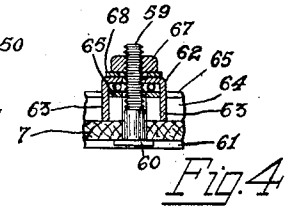

Fig. 4.

Witnesses:

G. E. Mueller

Wm. Berghahn

Inventor:

Alfred H. Weiss

By Curtis B. Camp

Attorney.

THE NORRIS PETERS CO., PHOTO-LITHO., WASHINGTON, D. C.

A. H. WEISS.

SWITCHING DEVICE.

APPLICATION FILED DEC. 26, 1912.

1,224,517.

Patented May 1, 1917.

2 SHEETS—SHEET 2.

Fig. 6.

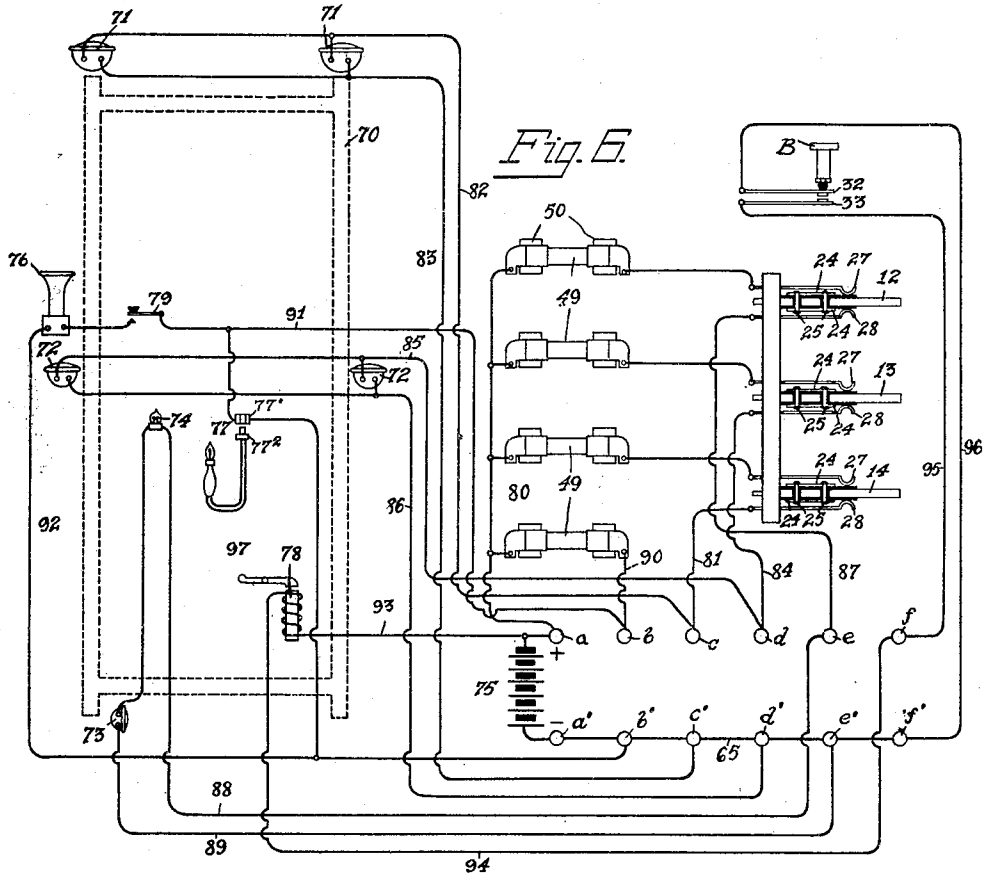

Witnesses:

G. E. Mueller

Wm. Berghahn.

Inventor:

Alfred H. Weiss

By Curtis B. Hunt

Attorney.

THE NORRIS PETERS CO., PHOTO-LITHO., WASHINGTON, D. C.

UNITED STATES PATENT OFFICE.

ALFRED H. WEISS, OF CHICAGO, ILLINOIS, ASSIGNOR TO KELLOGG SWITCHBOARD AND SUPPLY COMPANY, OF CHICAGO, ILLINOIS, A CORPORATION OF ILLINOIS.

SWITCHING DEVICE.

1,224,517. Specification of Letters Patent. Patented May 1, 1917.

Application filed December 26, 1912. Serial No. 738,565.

To all whom it may concern:

Be it known that I, ALFRED H. WEISS, a citizen of the United States of America, residing in Chicago, county of Cook, and State of Illinois, have invented certain new and useful Improvements in Switching Devices, of which the following is a specification.

My invention relates to electrical keys and more particularly to keys of the multiple type for use in connection with automobile lighting and starting systems.

It is the object of my invention to produce an improved device of the class described which will obviate undesirable features and embody desirable features and advantages all in a simple, efficient and economical manner, and to the accomplishment of this object and such others as may hereafter appear, the invention consists in the novel details of construction, parts, and combination of parts hereafter described and particularly pointed out in the appended claims, reference being had to the accompanying drawings forming a part hereof in which the same reference characters indicate like parts throughout the several views, and in which:—

Figure 1 is a plan view of a junction box with the cover removed and parts shown broken away to show construction of same and also showing one of the switching handles in its operated position.

Fig. 2 is a side elevation of the junction box with the cover in place showing the box and cover in section.

Fig. 3 is a section along the line 3, 3 of Fig. 1 looking in the direction of the arrows to show the construction of one of the three lighting switches.

Fig. 4 is a section along the line 4, 4, of Fig. 1 looking in the direction of the arrows indicated thereon to show the construction of one of the binding posts.

Fig. 5 is a perspective view of the fuse clip and Fig. 6 is a circuit showing the junction box connected in circuit with the lighting and starting system of an automobile.

Referring now more in detail to my invention as illustrated on sheet one of my invention, it comprises a rectangular shaped box 1 which is stamped and formed out of sheet steel or any other suitable material. The box contains the lighting switches, starting button, fuse block and binding posts of my junction box, all of which will be explained more in detail in ensuing parts of the specification. The cover 2 is fitted over the box and has its edges rolled so as to fit snugly over the box after the cover is screwed down in place. The cover may be fastened in any suitable manner but I preferably use the method shown in the accompanying drawing in which the cover 2 has the two indentations 3 which are drilled and tapped to take the thread of the screws 4. The screws 4 are screwed into the tapped hole of the indentations 3 until the thread of the screw passes through it. The upper half of the screw being smaller in diameter than the threaded portion and after the screw threads pass through the tapped hole the smaller upper diameter of the screw gives the screw play so in case there are slight inaccuracies in setting the studs 5 in the bottom of the box the screws will have enough play to enable them to be screwed into the studs 5 which are tapped to receive the screws 4. The screws 4 are also placed so that in case the cover is taken off the screws still remain in the cover doing away with the loss of screws. The fastening as described is simple in construction but it holds the cover tightly in place against jarring of the car.

A rectangular piece of insulating material 6, any kind being suitable, is placed in the bottom of the box and above that an L-shaped block of wood 7. The rectangular piece of insulation 6 and L-shaped block of wood 7 are fastened to the bottom of the box by means of the wood screws 8 which are shown dotted in Fig 2. The plate 9 is fastened to the L-shaped block of wood 7 by means of the wood screws 10, one side of the plate being bent up in the form of a right angle 9^1 which angular piece 9^1 has the square holes 11 punched through it to receive the handle ends 15, 16, and 17 of the switch bars 12, 13, and 14. The handle ends extend through the square openings 11 of the angular portions 9^1 of the plate 9 and through U-shaped openings 18 in the side of the box 1.

The handle ends 15, 16, and 17 protrude beyond the box 1 and bend upward above the cover 2 so that in case any one of the switching handles which the operator of the car sees fit to operate is easily accessible. The inner surfaces of the bent up portion

of the switching handles are shaped so as to conform with that of the finger.

The switching handles 12, 13 and 14 are supported at their forward ends by the square openings 11 of the angular portion 9^1 of plate 9 and the ends extending into the inside of the box are in the form of studs 19 driven into the switching handles and supported in a block of insulation 20 which has been drilled the size of the studs 19. The forward or outward movement in operating the handles is stopped by the shoulders 21 which butt up against the angular portion 9^1 of the plate 9. The backward movement in restoring the handles is checked by the shoulders 22 which butt up against the block of insulation 20.

A leaf spring 45 is clamped between the block 20 and the plate 9 by means of the screws 31. The portions 45^1 of the leaf springs 45 clamped between the insulating block and the plate are of one piece, the springs 45 extending from it under the handles being the separate extensions of the piece clamped. The free end of the spring is shaped so that it rests in a recess 46 on the bottom of the bars 12, 13, 14. The free end of the spring is under tension this necessitating a pull on the handles to operate them. When the switch bar is fully operated the free end springs back by passing beyond the projection 47 back of shoulder 48 and holds the switching handle in its fully operated position. In restoring, the operator pushes the switching handle inwardly against the initial holding pressure of the spring 45. This leaf spring holds the switching handle in a rigid position at all times and the jarring of the automobile will not in any way disturb the position thereof.

A strip of insulation 23 is mounted on each side of the handle and then a strip of copper 24 on top of each strip 23. These two pieces on each side are held in place by the rivets 25 which pass through insulating bushings 26 which insulate the rivets from the switching handle, and when the handle is in its operated position it electrically connects the two copper strips 24.

The contact springs 27 and 28 are set in the block of insulation 20 which is slotted to receive the springs 27 and 28. A strip of insulating material 29 is then placed between the block of insulation 20 and the metal clamping strip 30. The screws 31 pass through the plate 9, the insulation block 20 the strip 29 and screw into the metal strip 30 clamping the pieces together and also holding them securely in place to the plate 9. The free ends of the springs 27 and 28 normally rest on the insulation strips 23 which are fastened to the switching handle and when the switching handle is pulled out into its operated position the free ends of the springs 27, 28 pass from the insulation strips 23 to the strips of copper 24 as shown in Fig. 1 which shows the switching handle in its operated position. In this position the circuit is closed by the two strips 24 being connected by the rivets 25 but insulated from the switching handle by the bushing 26. Thus, it may be seen that whenever the switching handle is pulled into its operated position there is always a positive connection and not the least chance of the circuit being broken.

The plate 9 is bent up at one end to form a fastening plate 9^2 for the contact springs 32, 33 which when closed by the push button B, operate the magnetic clutch which will be explained more in detail in describing the circuit illustrated in Fig. 6. The contact springs 32, 33 are fastened to the bent up end 9^2 of the plate 9 by means of screws 34 which screw into the plate 35, the contact springs being suitably insulated by a strip of insulation placed between them, the screws passing through insulation bushings (not shown). The push button B shown in the drawing has parts in section to show the construction. The push button operates the spring contacts 32, 33 and comprises the button 36 having a shank 37 extending down through the metal bushing 38. The bushing 38 is staked into a hole drilled into the box 1 and has a portion extending into the box which is drilled to allow the shank 37 to pass through. The buffer 39 is of insulation and is forced into the hexagonal head of the screw 40 which is in turn threaded into the shank 37, the buffer 39 insulating the button from the contact springs 32 and 33.

A fuse block C is provided comprising a block 41 of insulating material fastened to the box by means of the screws 42 which pass through the bottom of the box and through the fuse block 41. A split washer 44 is put over the screw between the block 41 and the nut 43, the nut 43 being screwed down tightly. This split washer 44 acts as a lock for the nut 43 and holds the fuse block securely in place preventing any loosening due to the jarring of the automobile.

I have shown a fuse 49 in two of the fuse clips 50, showing how they are held in place. As illustrated in Fig. 5 the fuse holder is in the form of a clip having the upward extending arms 51 which are shaped to conform with the cylindrical ends of the fuse but somewhat smaller that the fuse itself. When the fuse is put in place it forces the clip members 51 outwardly and when the fuse has been forced to the part to conform with it, the members 51 spring back holding the fuse securely in place and the jarring of the automobile will

not dislodge them. The bent portions 52 on the members 51 act as end stops for the fuse. The clips 50 are held in place on the fuse block 41 by means of the rivets 53 which pass through the holes 54 of the clip 50 into the block 41. The extending piece 55 is bent at right angles to the base of the clip to fit along the side of the fuse block to keep it from slipping or moving around. The terminals 56 for the clips are extensions of the clip proper and notches cut in the angle portion to receive the wire to be soldered to it.

The binding posts D are in two rows of six each all being similar in construction with the exception that the outer row has a connecting strip 65 making them common to each other one binding post of the outer row having parts removed to show the construction of the strip 65. The inward row has a terminal piece 66 individual to each binding post, one binding post of the inner row having parts removed to show the terminal 66. The two rows of binding posts serve as terminals for the wiring in the interior of the box and that brought to the box from the lighting starting circuit of the automobile.

The wiring coming from the lighting and starting circuit of the automobile is brought through the oblong opening 58 which extends through the bottom of the box 1, the insulation 6, and the L-shaped block of wood 7. The binding post consists of a threaded stud 59 extending through the block 7 and having a square head 60 fitted into a groove 61 in the bottom of the block 7. This groove runs the width of the block and keeps the stud 59 from twisting around. The U-shaped piece 62 through which the stud 59 passes has two extending legs 63 which fit in the groove 64 in the top of the block 7. The terminals 66 of the inward row and the common strip 65 of the outer row fit under the U-shaped piece 62. To fasten a conductor or wire to one of the terminals, the end of the wire is placed between the U-shaped piece 62 and the strip 65 or terminal 66 and the nut 67 is then turned to securely clamp the wire between the contact surfaces of the U-shaped member 62 and the strip 65 or terminal 66. A split washer 68 is placed between the nut 67 and the U-shaped piece 62. The washer 68 acts as a lock for the nut 67 when said nut 67 is screwed down tightly to hold the wire in the binding post. This arrangement assures good connections which will not become loosened by jarring of the automobile. The extensions 66^1 of the pieces 66 are the terminals for the interior wiring of the junction box.

The holes 69 which extend through the block 7, the insulation 6 and the bottom of the box 1 receive the screws by which the box is fastened to the automobile. The fuse holders 70 which serve as holders for additional fuses are angular in shape with the upper end formed to hold the fuse as shown most clearly in Fig. 2. The fuse holder is forced outwardly from the end wall of the box in placing the fuse in it and when it is in place the tension of the spring holder securely holds the fuse in place between the wall of the box and the holder. The lower ends of fuse holders 70 are bent back and placed between the insulation 6 and the bottom of the box 1. When the block 7 and the insulation 6 are screwed to the bottom of the box by the screws 10 the lower ends of the holders 70 are held in place, the ends fitting between the insulation 6 and the bottom of the box, are bent up along the insulation 6, thus securely holding the clips between the insulation and the bottom of the box.

Referring now to Fig. 6, I illustrate a circuit arrangement of the junction box and apparatus in a diagrammatic way, that is with the junction box operating in connection with a lighting and starting circuit of an automobile. In the drawing I show the chassis 70 of an automobile dotted in a diagrammatic way. I place the different lights in their same relative position as they are located on an automobile. The head lights 71 are controlled by the switching handle 14, the said head lights having their terminals at the binding posts c and c^1. The side lights 72 are controlled by the switching handle 13, the said side lights having their terminals at the binding posts d and d^1. The tail light 73 and speedometer light 74 are controlled by the switching handle 12. The said tail light and speedometer light have their terminals at the binding posts e and e^1. The binding posts a and a^1 are the terminals for the battery 75. The binding posts b and b^1 are the terminals for the horn 76 and the handy plug and socket 77. The button 79 that controls the operation of the horn is placed in circuit with open contacts which when closed operate the horn. The clutch magnet 78 is controlled by the contacts 32 and 33 which operate in connection with the button B, the clutch having its terminals at binding posts f and f^1.

Operation.

The operator of the automobile wishing to light the different lights of the automobile would pull out the switching handles 12, 13 or 14 accordingly. To light the head lights 71 the switching handle 14 would be pulled out closing the circuit from the positive side of battery 75 at binding post a, conductor 80 through the fuse 49 of the head light circuit, the spring 27, the copper strips 24, and rivets 25, the spring 28, conductor 81, the binding post c, conductor 82, through the two head lights 71 in multiple back over

conductor 83, the binding post c^1, the common strip 65 to the grounded side of the battery 75 thus lighting the head lights.

The side lights are lighted by pulling out the switching handle 13 which closes a circuit from the positive side of battery at binding post a, conductor 80, the fuse 49 of the side light circuit, the spring 27, the copper strips 24, of the switching handle 13 and the rivets 25, the spring 28, conductor 84, the binding post d, conductor 85, the two side lights 72 in multiple back over conductor 86, the binding post d^1, the common strip 65 to the grounded side of battery 75 thus lighting the side lights.

The tail light and speedometer light are lighted by pulling out the switching handle 12 which closes a circuit from the positive side of battery at binding post a, conductor 80, the fuse 49 of the tail light and speedometer circuit, the spring 27, the copper strip 24 of the switching handle 12, the rivets 25, the copper strip 24, spring 28, conductor 87, binding post e, conductor 88 through the speedometer and tail light in series, the conductor 89 to the binding post e^1 the common strip 65 to the grounded side of battery, thus lighting the lights. The speedometer and tail lights are in series so as to act as a check for the tail light. If in case of trouble in the tail and speedometer circuit, the operator of the automobile can tell if the tail light is lighted because the speedometer and tail lights are in series and if the speedometer light is not lighted the operator knows that the tail light is also out.

The horn and handy plug and socket are in multiple in the same circuit. The horn circuit having the button 79 interposed in it which when closed operates the horn. The operation of the horn is as follows. Upon operation of switch 79, a circuit for the horn is closed, traced from the positive side of battery 75 at binding post a, conductor 80, the fuse 49, of that circuit, conductor 90, the binding post b, conductor 91, the closed contact of button 79 through the horn 76, conductor 92 to the binding post b^1, common strip 65 to the grounded side of battery. The handy plug and socket 77 is in the same circuit and is used as a handy portable lamp. The socket 77^1 is fastened to the dash of the automobile, and the plug 77^2 has an extension cord and a lamp attached to it. In using, the plug 77^2 is inserted in the socket 77 which closes the circuit from the positive side of battery 75, a binding post, a conductor 80, the fuse 49 of that circuit, conductor 90, the binding post b, conductor 91 through the socket 77^1, plug 77^2, the lamp back over conductor 92 to the binding post b^1 common strip 65, to the grounded side of the battery.

The clutch magnet 78 is controlled by the button B and the contacts 32, and 33. The contacts 32 and 33 when closed complete a circuit from the positive side of the battery 75 at binding post a, conductor 93, through the clutch magnet 78, conductor 94, binding post f, conductor 95, contact 33, contact 32, conductor 96 to the binding post f^1, the common strip 65 to the grounded side of the battery. The magnet becomes energized attracting its armature 97. The operator of the automobile then throws in the starting pedal or other starting means adapted by different automobiles for starting the engine.

What I claim as new and desire to secure by United States Letters Patent is:

1. A switching device comprising a switch frame having front and rear supporting members, an angularly shaped switch operating-bar suitably supported by said frame so as to prevent rotation of said bar but to permit longitudinal movement thereof, the rear extremity of said bar being adapted to engage the rear mounting support to limit the backward movement of said bar, projections formed integrally with said bar adapted to engage the forward mounting support to limit the forward movement of said bar, an angularly disposed hook shaped handle portion for said bar extending from the face of said frame, switch contact springs suitably carried by said frame on opposite sides of said switch bar, insulating strips on said bar normally engaged by the contacting portions of said switch springs, and conducting strips also carried by said bar but insulated therefrom by said insulating strips and adapted to be engaged by said switch springs to render the circuit through them continuous when the bar is operated.

2. A switching device comprising a switch frame having front and rear supporting members, an angularly shaped switch operating bar suitably supported by the front member so as to prevent rotation of said bar but to permit longitudinal movement thereof, a round supporting stud driven into said bar and extending through the rear supporting member, switch springs suitably carried by said frame on opposite sides of said switch bar, insulating strips on said bar normally engaged by the contacting portions of said switch springs, conducting strips also carried by said bar and adapted to be engaged by said switch springs to render the circuit through them continuous when the bar is operated, and a hook shaped member extending from said switch bar at its forward end which is adapted to be grasped by the finger of the operator when said bar is to be longitudinally moved to operate the switch contacts.

3. A switching device comprising a switching frame, an angularly shaped movable switch operating member suitably car-

ried by said frame, projections formed integrally with said member adapted to engage the frame to limit the forward movement of said member, a pair of strips of insulation and a pair of conducting strips mounted upon said switch operating member, conducting pins connecting said pair of conducting strips, a pair of springs mounted upon said frame and adapted to coöperate with said conducting strips, a spring member secured to said switching frame for yieldingly holding said operating member in its normal or operated position, and means for moving said operating member to its operated position thereby causing said switch springs to engage said conducting strips to close a circuit connection between said springs.

Signed by me at Chicago, county of Cook and State of Illinois, in the presence of two witnesses.

ALFRED H. WEISS.

Witnesses:
G. E. MUELLER,
B. O'BRIEN.

Copies of this patent may be obtained for five cents each, by addressing the "Commissioner of Patents, Washington, D. C."