(19) DANMARK

(10) DK/EP 3135086 T3

(12) Oversættelse af europæisk patentskrift

Patent- og Varemærkestyrelsen

(51) Int.Cl.: *A 01 B 79/00 (2006.01)* *A 01 B 61/00 (2006.01)*

(45) Oversættelsen bekendtgjort den: **2019-01-21**

(80) Dato for Den Europæiske Patentmyndigheds bekendtgørelse om meddelelse af patentet: **2018-10-03**

(86) Europæisk ansøgning nr.: **16401040.7**

(86) Europæisk indleveringsdag: **2016-07-11**

(87) Den europæiske ansøgnings publiceringsdag: **2017-03-01**

(30) Prioritet: **2015-07-16 DE 102015111518**

(84) Designerede stater: **AL AT BE BG CH CY CZ DE DK EE ES FI FR GB GR HR HU IE IS IT LI LT LU LV MC MK MT NL NO PL PT RO RS SE SI SK SM TR**

(73) Patenthaver: **Amazonen-Werke H. Dreyer GmbH & Co. KG, Am Amazonenwerk 9-13, 49205 Hasbergen, Tyskland**

(72) Opfinder: **Schlüter, Tim, Frankensteiner Weg 4, 49078 Osnabrück, Tyskland**

(74) Fuldmægtig i Danmark: **Patrade A/S, Ceresbyen 75, 8000 Århus C, Danmark**

(54) Benævnelse: **JORDKULTIVERINGSANORDNING OG METODE TIL UDARBEJDELSE AF ET JORDKORT MED EN SÅDAN JORDKULTIVERINGSANORDNING**

(56) Fremdragne publikationer:
EP-A1- 1 273 216
EP-B1- 0 749 677
DE-C2- 4 232 067

SOIL CULTIVATION DEVICE AND METHOD FOR CREATING A SOIL MAP WITH SUCH A SOIL CULTIVATION DEVICE

Description

The invention relates to a soil-cultivating implement according to the preamble of Claim 1 and to a method for producing a soil map with such a soil-cultivating implement.

A soil-cultivating implement is already known from DE 42 32 067 C2, in which an overload safeguard for its soil-cultivating tool has a sensor for registering the relative position of the soil-cultivating tool, wherein a pressure controller is operationally connected to the sensor and a microprocessor is provided, which ensures that a minimization of the relative movements of the soil-cultivating tool as a reaction to different soil resistances is achievable. The soil-cultivating tool disclosed in this document is a plough, which is embodied so as to be pivotable around a joint against a pre-tension force generated by a hydraulic cylinder, so that the soil-cultivating tool has a uniform working position in normal soil conditions. As soon as the soil-cultivating tool encounters an increased resistance, however, as arises due to rocks or strongly solidified soil sections, for example, an evasion movement begins, which is possible by way of the hydraulic cylinder coupled to the soil-cultivating tool, which returns the soil-cultivating tool back into its working position following the evasion movement.

In other words, an overload safeguard is described in DE 42 32 067 C2, which adapts itself automatically to the respective soil conditions, wherein a certain degree of flexibility of the soil-cultivating tool is entirely permissible. A pressure sensor or a position sensor is used in this case as the sensor.

A sensor, which is also referred to as a detector, measured variable pickup, or measuring feeler, is very generally a technical component which can acquire specific physical or chemical properties and/or the material quality of its surroundings qualitatively or quantitatively as a measured variable. These

variables are converted into an electrical signal which can be further processed. The sensor is thus defined as the part of a measuring device which responds directly to a measured variable. The sensor is therefore the first element of a measuring chain. A pressure sensor described in DE 42 32 067 C2 accordingly measures the physical variable pressure (= force per unit of area) and converts it into an electrical output variable as a measure of the pressure.

In addition, EP 0 749 677 B1 describes a method for determining data about the state of an agricultural area, in which the required power consumption of a soil-cultivating implement is acquired at various points in time and is stored in conjunction with the respective location of the soil-cultivating implement in a memory unit. According to the content of the disclosure of this document, in this case the power consumption can be determined by acquiring the drive and/or traction power of the soil-cultivating implement and/or by determining the penetration depth or speed of the soil-cultivating implement. The determined data are supplemented and/or updated at intervals in this case by new measurements. A DGPS system by means of satellite navigation is used for the location determination of the soil-cultivating implement.

In this case, this generally means that a global position determination system ("global positioning system"), abbreviated "GPS", is based on satellites which continuously emit their present position and the accurate time of day using coded radio signals. Special GPS receivers can then compute their own position and speed from the signal runtimes. Theoretically, the signals of three satellites are sufficient for this purpose, since the accurate position and height can be determined therefrom. In practice, however, GPS receivers do not have a clock which is accurate enough to measure the runtimes correctly. Therefore, the signal of a fourth satellite is required, using which the accurate time can also be determined in the receiver. However, not only the position, but rather also the movement direction of the receiver may be determined using the GPS signals.

The determined data are transmitted in the solution according to EP 0 749 677 B1 via suitable data lines to a terminal which has the memory unit. In this context,

the assignment of the acquired data to the respective location also takes place. In a following year, the cultivation of the soil is to be controlled and/or regulated by this type of data acquisition, or the possibility exists of adapting a sowing unit attached to the plough to the soil conditions.

The determination of the power consumption of the soil-cultivating implement results in a comparatively inaccurate acquisition of the data of the soil surface. This is because, for example, during the measurement of the drive power, values are also incorporated into the evaluation which are caused exclusively by the driving behaviour of the driver, which can result in misinterpretations. In addition, the method presented in this document is also comparatively inaccurate because solely the position of the soil-cultivating implement is determined, which corresponds to a comparatively rough measurement.

The invention is based on the object of providing a soil-cultivating implement which enables a cartography of the soil to be cultivated with the highest possible accuracy. In addition, a method is to be specified, using which the stored data required for this purpose are usable.

A soil-cultivating implement having at least one soil-cultivating tool, one measuring device, and one memory unit which is coupled to the measuring device and has the purpose of storing and processing the data originating from the measuring device was refined to achieve the stated object according to the invention in that the measuring device has at least one sensor which is arranged on a plurality of soil-cultivating tools or on each soil-cultivating tool, and the measurement signals of which are a measure of the interference variables acting on the soil-cultivating tool, and has means for exchanging data with a global position-detection system (GPS).

In this case, the means for exchanging data with a global position-detection system (GPS) is to be understood as a transceiver system for GPS signals, which can be, for example, a navigation implement, the signals of which are not output via a speech controller, but rather are stored as a measured signal in the meaning

according to the invention. The essential advantage of the invention can be seen in that sensors used for the measurement are arranged directly on a plurality of or on every soil-cultivating tool and not on the soil-cultivating implement, as is the case in the above-described known solutions. Therefore, the concept of the solution relates to providing such a sensor as much as possible on a large number of or even on every soil-cultivating tool. The acquisition of the measurement signals originating from the sensors, the storage thereof in the memory unit, and the combination thereof with the GPS data therefore enables a very accurate, detailed mapping of the soil. For this purpose, the relative positions of the individual soil-cultivating tools in relation to the GPS antenna, which is typically located on a tractor vehicle or tractor, are preferably established once. If the GPS antenna is located on the soil-cultivating implement, these relative positions can also already be stored in a control unit. The determination of the relative positions of soil-cultivating tool and GPS antenna results in particularly accurate mapping of the cultivated area.

It is furthermore possible by way of this mapping to divide the soil into regions which are easy, moderate, or difficult to cultivate. Moreover, accurate positioning in the soil of existing rocks or other obstructions can be performed by the proposed solution, so that damage to the soil-cultivating tool can thus be effectively avoided because, for example, in the following year, the soil-cultivating tool can already be raised before reaching the obstruction located in the soil and thus removed from the hazardous region.

According to a first embodiment of the invention, it is proposed that the measurement signals which are acquired by the sensors correspond to a force which acts on the soil-cultivating tool and is preferably measured at the soil-cultivating tool or at a clamping means, and/or to an acceleration and/or to a speed and/or to a travel which is executed by the soil-cultivating tool or the clamping means.

In other words, different sensors can be used for the solution according to the invention, which results in high flexibility of the embodiment of such a soil-

cultivating implement and is overall accompanied by a great simplification and the possibility of cost reductions.

A refining proposal according to the invention is furthermore that the sensors are, for example, mechanical, resistive, piezoelectric, capacitive, inductive, optical, or magnetic sensors.

A manometer is mentioned at this point as an example of a mechanical sensor.

An example of a resistive sensor, the resistance change of which can be acquired, is, for example, a strain gauge. In the case of measurement using a strain gauge, it is fastened directly on the soil-cultivating tool or on the clamping means or integrated therein, wherein the deformation occurring due to force action is acquired. This has the result that the electrical resistance of the strain gauge changes with its elongation, which can be converted into an electrical voltage. This electrical voltage and thus the elongation change can be acquired and can be converted into a force measurement value on the basis of the elastic properties of the component provided with the strain gauge.

In a piezoceramic element as a sensor, in contrast, a charge distribution which is proportional to the introduced force results due to the force action. Depending on the type of the crystalline structure of the piezoelement, pressure or shear forces can be measured. The latter can also be acquired, for example, using a shear bolt attached to the soil-cultivating tool. Tension forces can only be measured using pre-tension. Piezoelectric force pickups are generally embodied to be very stiff and are also suitable for measuring highly dynamic forces (depending on the embodiment, up to 60 kHz).

An acceleration sensor, in contrast, is a sensor which measures an acceleration. This is usually performed by determining the inertia force acting on a test mass. It can thus be determined, for example, whether a speed increase or speed decrease takes place.

A distance sensor, in contrast, is used for measuring the distance between an object and a reference point or of length changes. In this case, the change of the distance is converted into a unity signal or transmitted to the control unit. Other terms for this purpose are distance measuring system, distance pickup, spacing sensor, position sensor, or distance sensor.

Inductively or magnetically acting sensors require a changing magnetic field, the change of which is acquired by the sensor. A Hall sensor is mentioned at this point as an example of such sensors.

Optical sensors are based on the influence of visible or non-visible light, for example, in the infrared range, the change of which is converted into an electrical voltage, which can in turn be acquired.

As was previously indicated, it is in the meaning of the invention that each measurement signal which is acquired by the sensors is assigned to the corresponding GPS signal and stored in a reproducible fashion in the memory unit. This has the result, for example, that independently of the location of the beginning of the cultivation of a soil surface, firstly the corresponding GPS signal is acquired and compared to a value stored in the memory unit for the resistance in the soil, so that proceeding from this position, the values of the underlying surface correlated with one another are always available. If such an association and reproducibility of the signals were not provided, the soil would always have to be cultivated proceeding from the same starting point. This is not required due to the invention.

The proliferation of electronic components and the data lines required for the data transmission is accompanied by the disadvantage that damage can occur to individual elements and in particular to the data lines. To avoid this, according to a very advantageous refining proposal of the invention, at least one cable-free data transmission system is present for transmitting data between the measuring device and the sensor and/or between the measuring device and the memory unit and/or between the measuring device and GPS. By dispensing with the typically

required cables, the susceptibility to failure can be substantially reduced in the scope of the invention. Bluetooth, WLAN, or Wi-Fi are mentioned solely by way of example at this point as cable-free systems.

In one advantageous refinement, the energy which is necessary for the measuring process by the sensor is obtained by means of a generator which is responsible for this, using energy harvesting, preferably from vibration energy and/or thermal energy and/or solar energy. "Energy harvesting" generally refers to obtaining small quantities of electrical energy from sources, such as ambient temperature, vibrations, or airflows for mobile implements having low power. The structures used for this purpose are also referred to as nanogenerators. Restrictions given by wired power supply or batteries can be avoided by this method. In this way, the energy can be obtained autonomously, i.e., independently of the tractor vehicle, by means of one or more generators on the soil-cultivating implement. Therefore, according to the invention, a detailed map of the quality of the cultivated area can be produced by means of the soil-cultivating implement according to the invention although a wired line to the tractor vehicle does not have to be provided for data transmission and energy transmission.

The soil-cultivating implement can be, for example, a plough or a grubber. The soil-cultivating tools of these soil-cultivating implements are loaded very strongly during the soil cultivation and therefore require a solution as to how they can be protected from damage.

The method according to the invention for producing a soil map with a soil-cultivating implement is characterized in that at least one sensor which is present on a plurality of soil-cultivating tools, or on each soil-cultivating tool, of a soil-cultivating implement and whose signals each constitute a measure of an interference variable which acts on the soil-cultivating tool, generate measurement signals which are acquired in a periodically recurring fashion and simultaneously together with a position signal which originates from the GPS and are stored assigned thereto in the memory unit.

The special advantage of this method is the periodic repetition, wherein the time interval is preferably settable, so that by reducing the time interval between two measurements, the accuracy can be increased. The acquired data of the individual sensors are subsequently acquired together with the respective position signal inside the memory unit and are thus available for the cultivation of the soil at a later point in time. Of course, there is also the option in this case of reading out the data from the memory unit and storing them, for example, on mobile data carriers. This also enables the use of the data for further soil-cultivating implements.

In one refinement of the method, the measurement signals are acquired and stored only when the force and/or the torque and/or the pressure which act on the soil-cultivating tool and are acquired by the measuring device exceed/exceeds a threshold value. In this manner, only those measured values are acquired which potentially display a destructive effect on the soil-cultivating tool. In this way, a map can be produced which has the position of obstructions located in the soil.

A matrix of the cultivated soil in the sense of a map can be produced by the acquisition of the sensor signals and the GPS signals and the functional linkage thereof, which has not only the different soil conditions but rather also obstructions within the soil. Therefore, according to one embodiment of the method, in order to determine the quality of the soil by means of the position signal and the measurement signal assigned thereto, a cartographic representation of the cultivated soil is produced and stored inside the memory unit or using the memory unit.

The effort required for acquiring the soil structure is rewarded when the soil has to be cultivated again at a following point in time after an initial mapping. This is because the option then exists of using the data stored in the memory unit of one measurement period as reference data for soil cultivation which is to be carried out with the soil-cultivating implement at a later time.

Further details of the invention can be inferred from the description of the examples and the drawings. In the figures of the drawings:

Figure 1: shows a soil-cultivating implement attached to a tractor vehicle,

Figure 2: shows a first embodiment variant of a soil-cultivating tool,

Figure 3: shows a second embodiment variant of a soil-cultivating tool,

Figure 4: shows a third embodiment variant of a soil-cultivating tool,

Figure 5: shows a fourth embodiment variant of a soil-cultivating tool having a sensor in a first position,

Figure 6: shows the embodiment variant of a soil-cultivating tool from Figure 5 in a second position, and

Figure 7: shows a greatly simplified schematic illustration of the principle of the invention.

Figure 1 shows, on the basis of the example of a grubber, a soil-cultivating implement 1, which is pulled in the illustrated example by a tractor vehicle 13. A tractor is used in this case as the tractor vehicle 13. The soil-cultivating implement 1 substantially consists of a frame 14 having a roller 16 at its end opposite to the tractor vehicle 13. A plurality of grubber tines 19 are arranged on the lower side of the soil-cultivating implement 1, in a manner reasonable for the soil cultivation. The special feature according to the invention that the soil-cultivating implement 1 has a measuring device 5, which has a sensor 7 or 8 arranged on the soil-cultivating tool 4, will be explained in greater detail hereafter in conjunction with the description of Figures 2 to 7. However, Figure 1 shows a part of a measuring device 5 embodied as a display screen, which visualizes the course of the measuring procedure to the driver of the tractor vehicle 13. In addition, two satellites are schematically shown in Figure 1, which are components of a global position-detection system (GPS) 9.

A tool arrangement of a grubber is shown as an example of a soil-cultivating tool 4 in Figure 2, at the lower end of which a grubber tine 19 is embodied having a sharp-edged tip penetrating into the soil. The tine carrier 15 is received so it is pivotable in a flange 17 around a joint 2 and is fastened by means of the fastening

bracket 18 as a module on the lower side of the soil-cultivating implement 1, as was already explained in conjunction with the description of Figure 1. The flange 17 of the soil-cultivating tool 4 shown in Figure 2 furthermore accommodates a clamping means 3, which is a tension spring in the example shown. This clamping means 3 applies a pre-tension force to the tine carrier 15, which is sufficient to carry out normal soil cultivation without the tine carrier 15 evading, i.e., without it being pivoted around the joint 2. However, if very strongly solidified components, rocks, or other obstructions are located in the soil, which could result in the destruction of the tine carrier 15 or the grubber tine 19, a substantial advantage of the illustrated exemplary embodiment is thus represented in that the clamping means 3 is capable of enabling an evasion movement of the tine carrier 15 around the joint 2. Normally, the tine carrier 15 only evades if it comes directly into contact with a hardened section of the soil or with the rock during the soil cultivation. In spite of the enabled evasion movement, this can result in increased wear or, in the worst case, also in damage to the grubber tine 19 or the tine carrier 15. To preclude this risk, a sensor 7 is arranged on the tine carrier 15 of Figure 2, which is a strain gauge in the illustrated example. As previously stated, the deformation of the soil-cultivating tool 4 occurring due to force action and the elongation of the strain gauge accompanying this result in a change of the electrical resistance. The conversion into an electrical voltage enables the conversion into a force measured value, which is stored in a memory unit 6 and is thus available at any time for later use. The acquisition of the position of the soil-cultivating tool 4 via a GPS 9 and its assignment to the measured value acquired by the sensor 7 for this position value enables a very exact cartography of the cultivated soil.

An embodiment of a soil-cultivating implement 4 substantially structurally equivalent to the illustration in Figure 2 is shown in Figure 3. In contrast to the variant in Figure 2, however, in this case two acceleration sensors 7 and 8 are used. The first acceleration sensor 8 is used in this case to generate a reference signal, while the second acceleration sensor 7 is used to acquire the acceleration of the tine carrier 15 permanently and simultaneously with the position signal acquired via the GPS 9. It can be sufficient for this purpose to attach the first

acceleration sensor 8 only at one point of the soil-cultivating machine and to use its signal as a reference for all second acceleration sensors 7. Since all tines are linked similarly to the rigid frame, it should be sufficient to use the signal of this one sensor 8 as a reference. To achieve a more exact measurement, alternatively, for example, first sensors 8 can also be attached on a plurality of or on all flanges 17. Every change of the position of the tine carrier 15 can thus be determined very exactly via the determination of a speed increase or speed decrease.

It is to be noted at this point that a measurement of the load of the grubber tine 19 or the tine carrier 15 can also be performed via a distance measuring device already described in greater detail at the outset, which can be arranged, for example on the clamping means 3, wherein a solution having a cable pull for implementing the movement of the tine carrier 15 would additionally also lead to the same result. Such a cable pull can also be laid in the flange 17 in addition to the clamping means 3.

With respect to the embodiment of the soil-cultivating tool 4, it also has to be noted in conjunction with the illustration in Figure 4 that this variant is also substantially structurally equivalent to the above-described embodiments. The difference in this case is in the use of the employed sensor 7, which is attached on the tine carrier 15. In the exemplary embodiment in Figure 4, it is a pressure sensor and in the special case a piezoceramic element as the sensor 7, in which a charge distribution arises due to force action, which is proportional to the introduced force. This charge distribution results in an electrical voltage, which can in turn be acquired as a measurement signal and stored inside the above-mentioned memory unit 6, wherein the assignment to the correlating position signal acquired via the GPS 9 also takes place here.

A special embodiment of a soil-cultivating tool 4 having an optical sensor 7 is shown in the illustrations in Figures 5 and 6. In this case, a reflector 12 is fastened on the pivotable part of the tine carrier 15, which is therefore also moved in the event of evasion movements of the tine carrier 15. The normal cultivating state of the tine carrier 15 is shown in Figure 5, in which the reflector 12 is

therefore not deflected and is located in its neutral position. A measured value generator 10, in the form of a light source, permanently or periodically emits an optical signal 11 onto the reflector 12, which is acquired by the light-sensitive sensor 7 after its reflection. In the illustrated example, the measured value generator is a light source, wherein the optical signal 11 is a laser beam. Other sources of electromagnetic radiation are also conceivable as the light source, for example, infrared sources. If a rock which cannot be overcome without destruction by the soil-cultivating tool 4 is located in the soil, for example, a deflection of the reflector 12 synchronous with the movement of the tine carrier 15 thus occurs in the direction of the arrow A in Figure 6. This change of the location of the reflector 12 is also metrologically acquired and stored just like the signals already stored above in the memory unit 6. During a later use of the stored values, it is thus exactly reproducible in conjunction with the position signal determined via the GPS 9 at which point of the cultivated soil a passage which cannot be overcome is located.

Figure 7 shows a greatly simplified illustration of the basic principle of the present invention. Accordingly, a soil-cultivating implement 1, which can be, for example, a grubber for cultivating a field, has soil-cultivating tools 4, i.e., for example, a plurality of grubber tines 19. At least one sensor 7 and/or 8 is arranged on each soil-cultivating tool 4, which generates a measurement signal defining the position of the soil-cultivating tool 4 during the cultivation of the soil. This measurement signal is acquired in a periodically recurring fashion and simultaneously together with a position signal which originates from a GPS 9. A measuring device 5 is provided for this purpose which comprises both the at least one sensor 7, 8 and means for data exchange with the GPS 9. The position signal of the GPS 9, and the measurement signal of the sensor 7, 8, are stored as signals assigned to one another in a memory unit 6 and are thus again available for a later use. It is possible by way of this procedure to process the quality of the soil for cartography, store it, and use it such that during a chronologically subsequent cultivation of the soil, the cultivating tool 4 can be raised in a timely manner before reaching an obstruction in the soil, to thus avoid a touch contact with the obstruction and protect the cultivating tool 4 as a whole in this manner. The

service life of such a cultivating tool 4 can thus be substantially lengthened, since damage to even a small extent is thus effectively avoidable.

LIST OF REFERENCE NUMERALS:

1	soil-cultivating implement
2	joint
3	clamping means
4	soil-cultivating tool
5	measuring device
6	memory unit
7	sensor
8	sensor
9	global position-detection system (GPS)
10	measured value generator (light source)
11	optical signal (laser beam)
12	reflector
13	tractor vehicle (tractor)
14	frame
15	tine carrier
16	roller
17	flange
18	fastening bracket
19	grubber tine

PATENTKRAV

1. Jorddyrkningsredskab (1) der har mindst et jorddyrkningsværktøj (4), en måleanordning (5) og en hukommelsesenhed (6) som er koblet til måleanordningen (5) og har det formål at lagre og behandle data der kommer fra måleanordningen (5), **kendetegnet ved**, at måleanordningen (5) har mindst en sensor (7, 8) som er arrangeret på en flerhed af jorddyrkningsværktøjer (4) eller på hvert jorddyrkningsværktøj (4), og hvis målesignaler er et mål for interferens variablerne, der virker på jorddyrkningsværktøjet (4) og har midler til udveksling af data med et globalt positioneringsdetekteringssystem (GPS) (9).

2. Jorddyrkningsredskab (1) ifølge krav 1, **kendetegnet ved**, at målesignalerne, som er detekteret af sensorerne (7, 8), svarer til en kraft, der virker på jorddyrkningsværktøjet (4) og er foretrukket målt ved jorddyrkningsværktøjet (4) eller ved fastspændingsmidler (3), og/eller til en acceleration og/eller en hastighed og/eller bevægelse, der er udført af jorddyrkningsværktøjet (4) eller fastspændingsmidlerne (3).

3. Jorddyrkningsredskab (1) ifølge et af de foregående krav, **kendetegnet ved**, at at sensorerne (7, 8) er mekaniske, resistive, piezoelektriske, kapacitive, induktive, optiske eller magnetiske sensorer.

4. Jorddyrkningsredskab (1) ifølge et af de foregående krav, **kendetegnet ved**, at hvert målesignal, som er detekteret af sensorerne (7, 8), er tildelt et respektivt tilsvarende GPS signal og lagret på en reproducerbar måde i hukommelsesenheden (6).

5. Jorddyrkningsredskab (1) ifølge et af de foregående krav, **kendetegnet ved**, at mindst et kabelfrit datatransmissionssystem er til stede til transmittering af data mellem måleanordningen (5) og sensoren (7, 8) og/eller mellem måleanordningen (5) og hukommelsesenheden (6) og/eller mellem måleanordningen (5) og GPS (9).

6. Jorddyrkningsredskab (1) ifølge et af de foregående krav, **kendetegnet ved**, at energien, som er nødvendig til sensorens (7, 8) måleproces, opnås ved hjælp af en generator, som er ansvarlig for dette ved at bruge energy harvesting, fortrinsvis fra vibrationsenergi og/eller termisk energi og/eller solenergi.

7. Jorddyrkningsredskab (1) ifølge et af de foregående krav, **kendetegnet ved**, at jorddyrkningsredskabet (1) er en plov eller en grubber.

8. Metode til udarbejdelse af et jordkort med et jorddyrkningsredskab (1) ifølge et af de foregående krav, **kendetegnet ved**, at mindst en sensor (7, 8) som er til stede på en flerhed af jorddyrkningsværktøjer (4), eller på hvert jorddyrkningsværktøj (4), af et jorddyrkningsredskab (1), og hvis signaler hvert udgør et mål for en interferens variabel, der virker på jorddyrkningsværktøjet (4), genererer målesignaler, der kommer på en periodisk gentagende måde og samtidig sammen med et positioneringssignal, som stammer fra GPS'en (9) og er lagret tildelt hertil i hukommelsesenheden (6).

9. Metode ifølge krav 8, **kendetegnet ved**, at målesignalerne kommer og kun lagres, når kraften og/eller drejningsmomentet og/eller trykket, som virker på jorddyrkningsværktøjet (4) og kommer fra måleanordningen (5), overstiger en tærskelværdi.

10. Metode ifølge krav 8 eller 9, **kendetegnet ved**, at for at bestemme kvaliteten af jorden ved hjælp af positionssignalet og målesignalerne, der er tildelt dertil, en kartografisk repræsentation af den dyrkede jord produceres og lagres inde i hukommelsesenheden (6) eller ved brug af hukommelsesenheden (6).

11. Metode ifølge et af kravene 8 til 10, **kendetegnet ved**, at dataene, lagret i hukommelsesenheden (6), af en måleperiode anvendes som referencedata til jorddyrkning, som skal udføres med jorddyrkningsredskabet (1) på et senere tidspunkt.

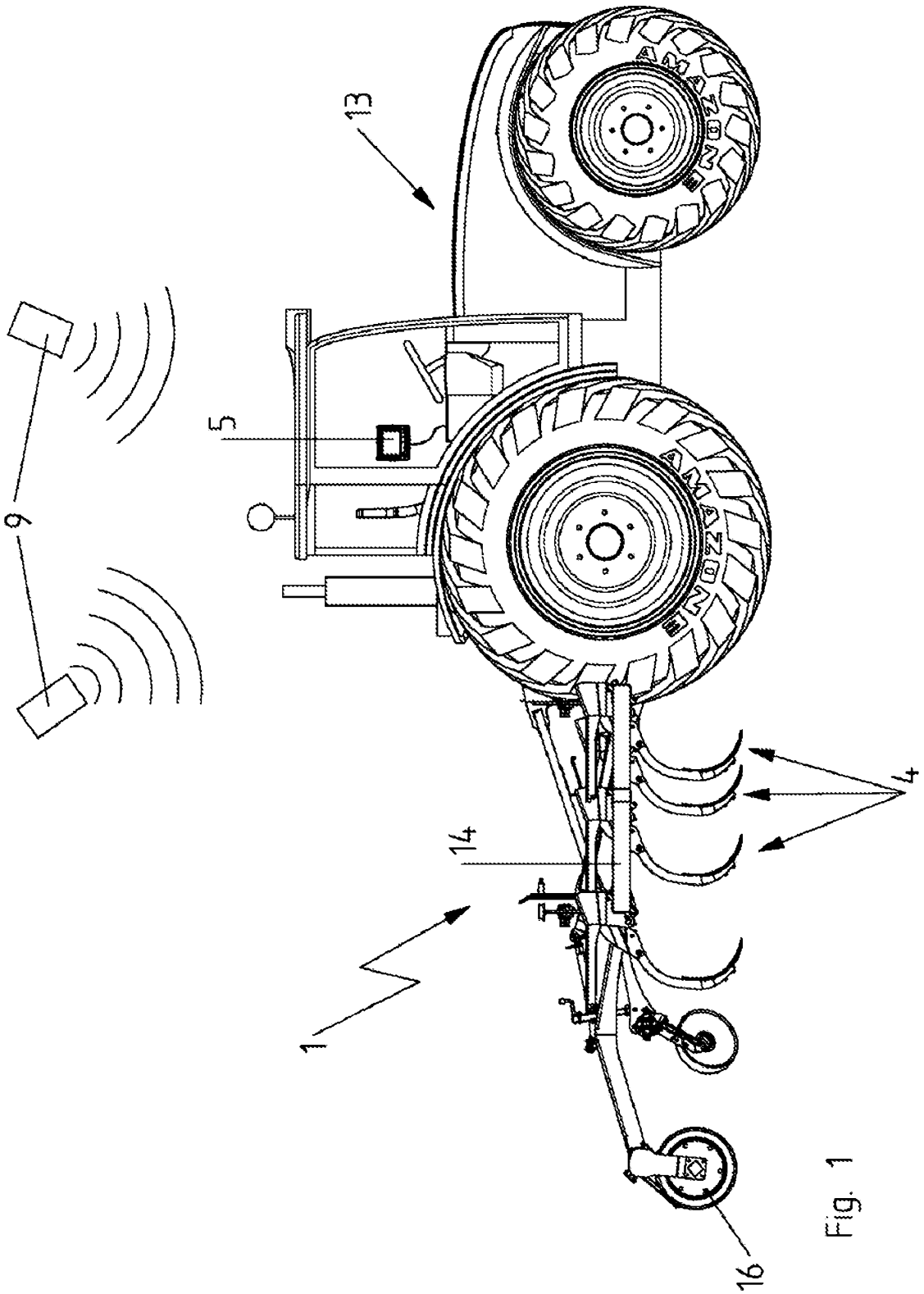

Fig. 1

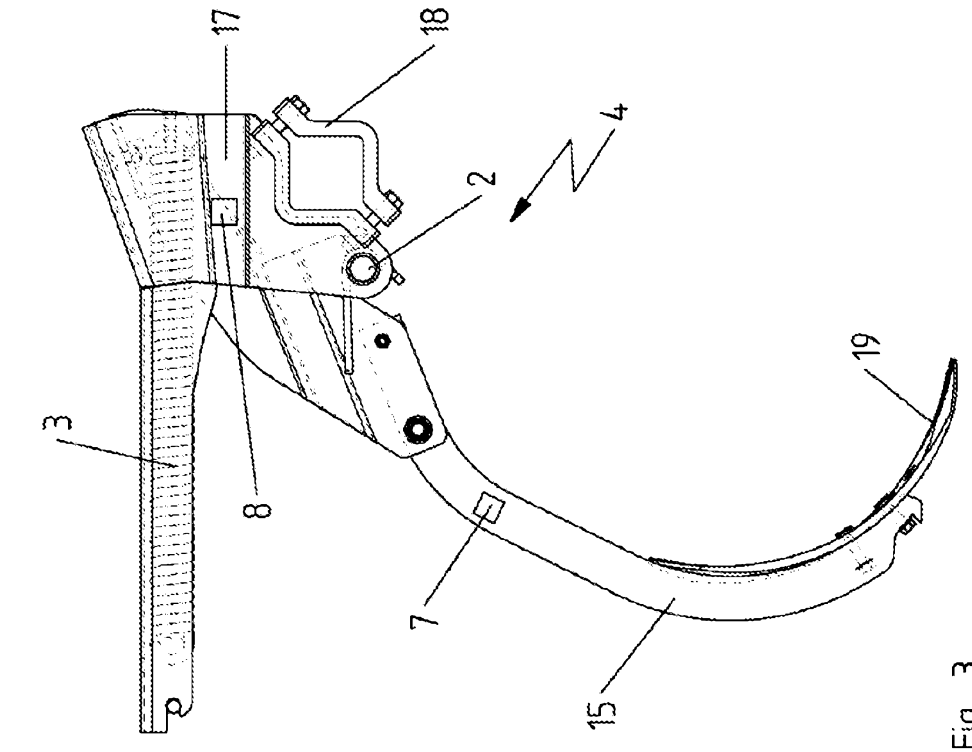

Fig. 3

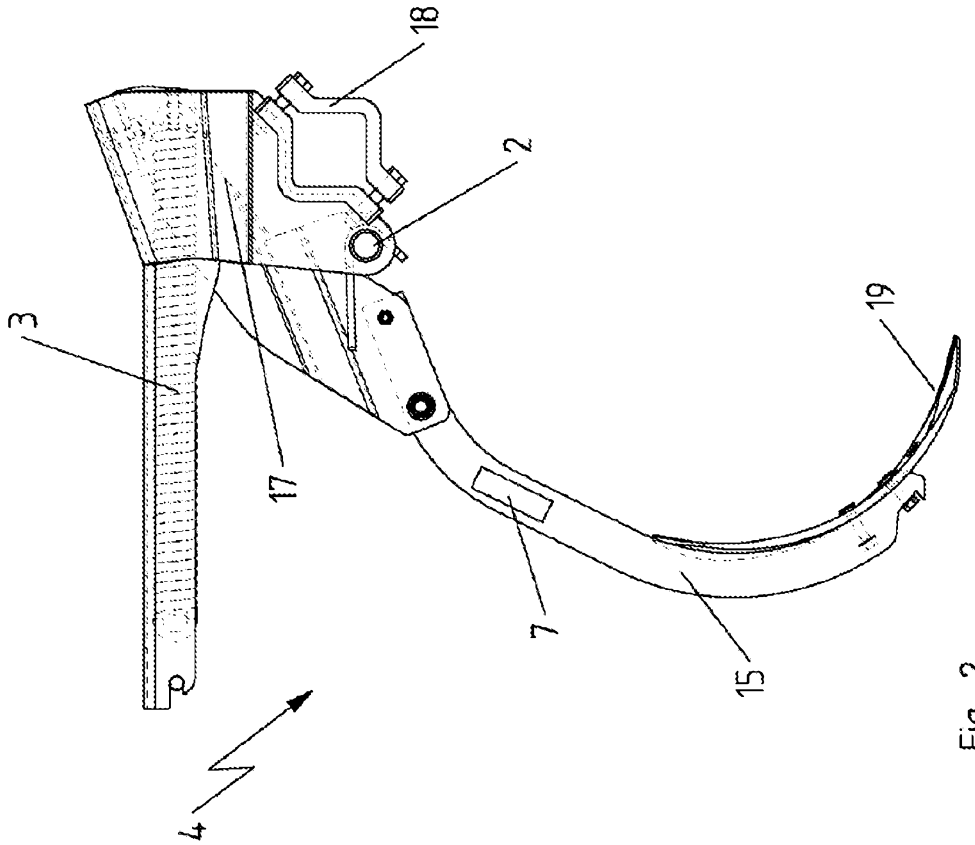

Fig. 2

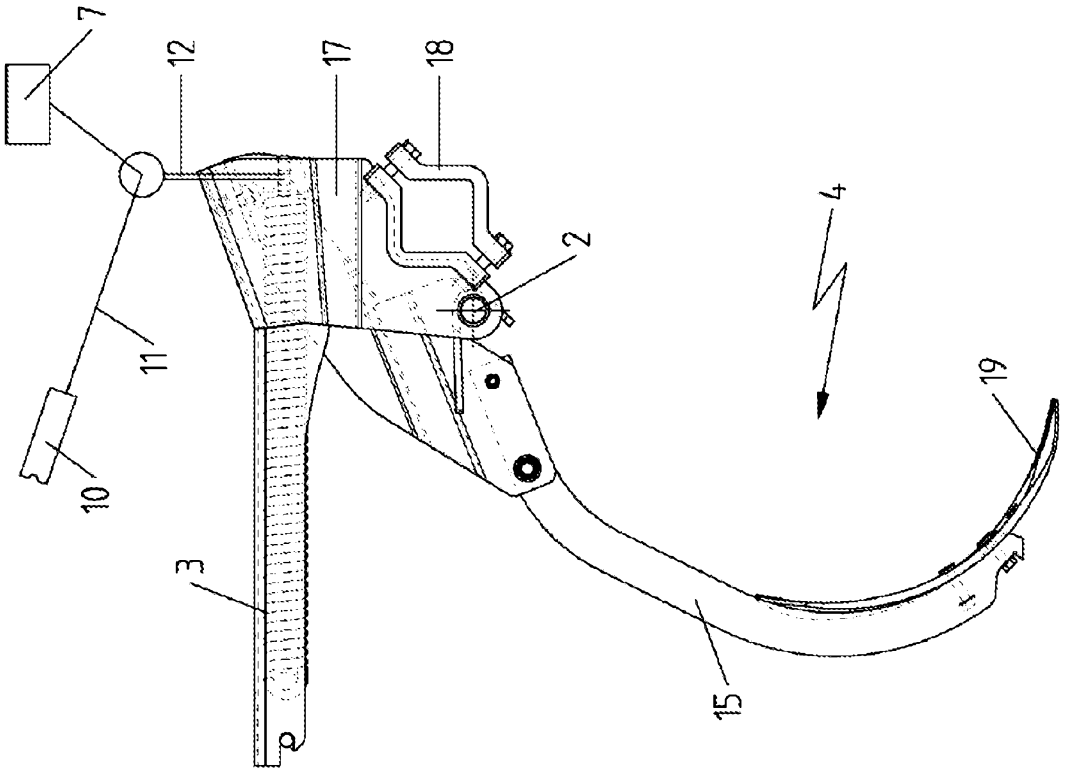

Fig. 5

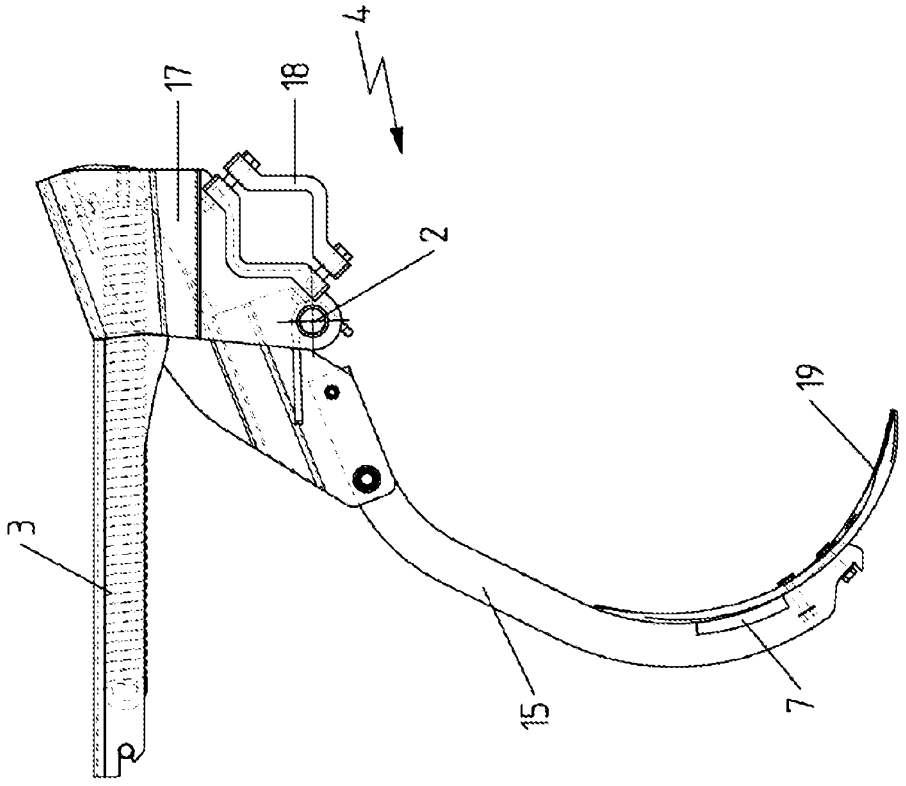

Fig. 4

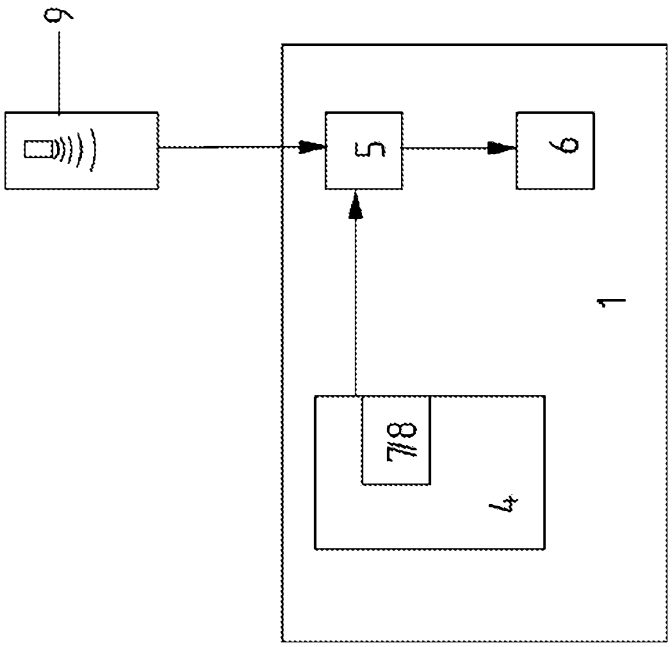

Fig. 7

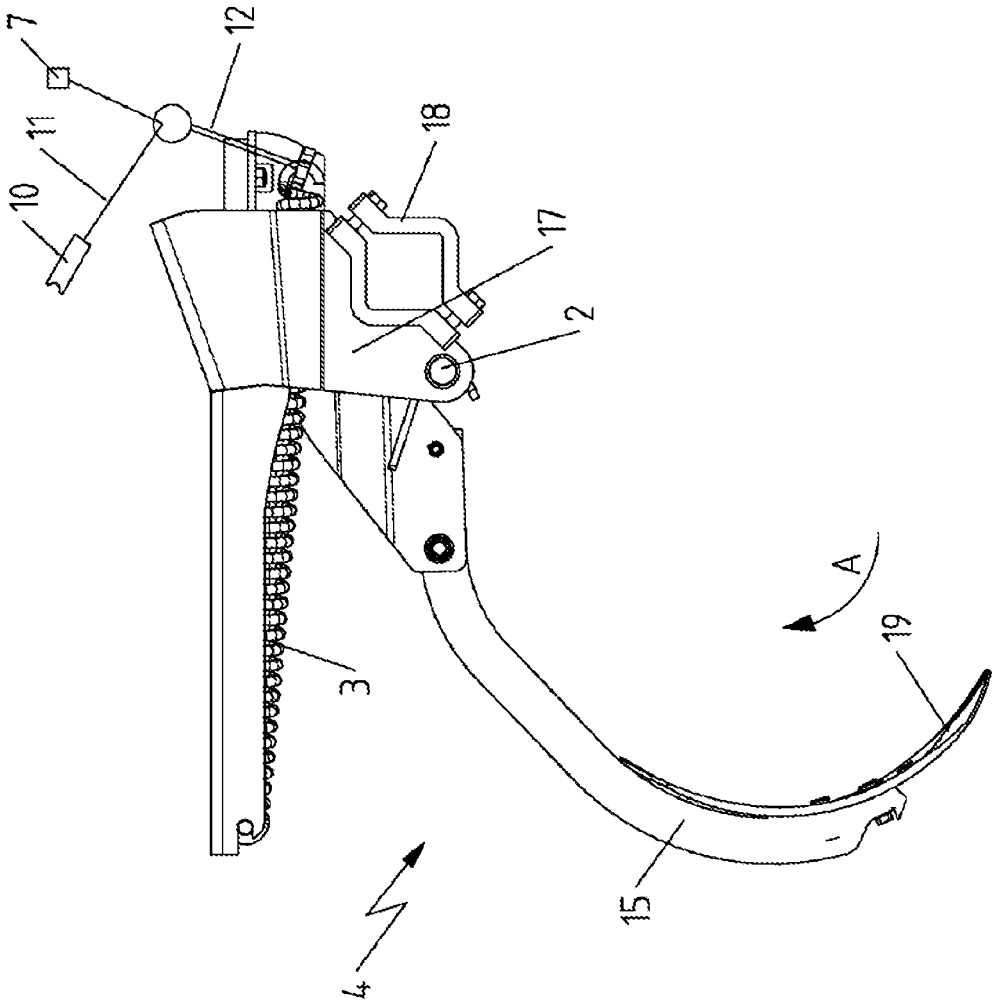

Fig. 6