March 28, 1961 N. E. BENSON 2,977,562

DIP SOLDERED PRINTED CIRCUIT SOCKETS

Filed Dec. 8, 1954

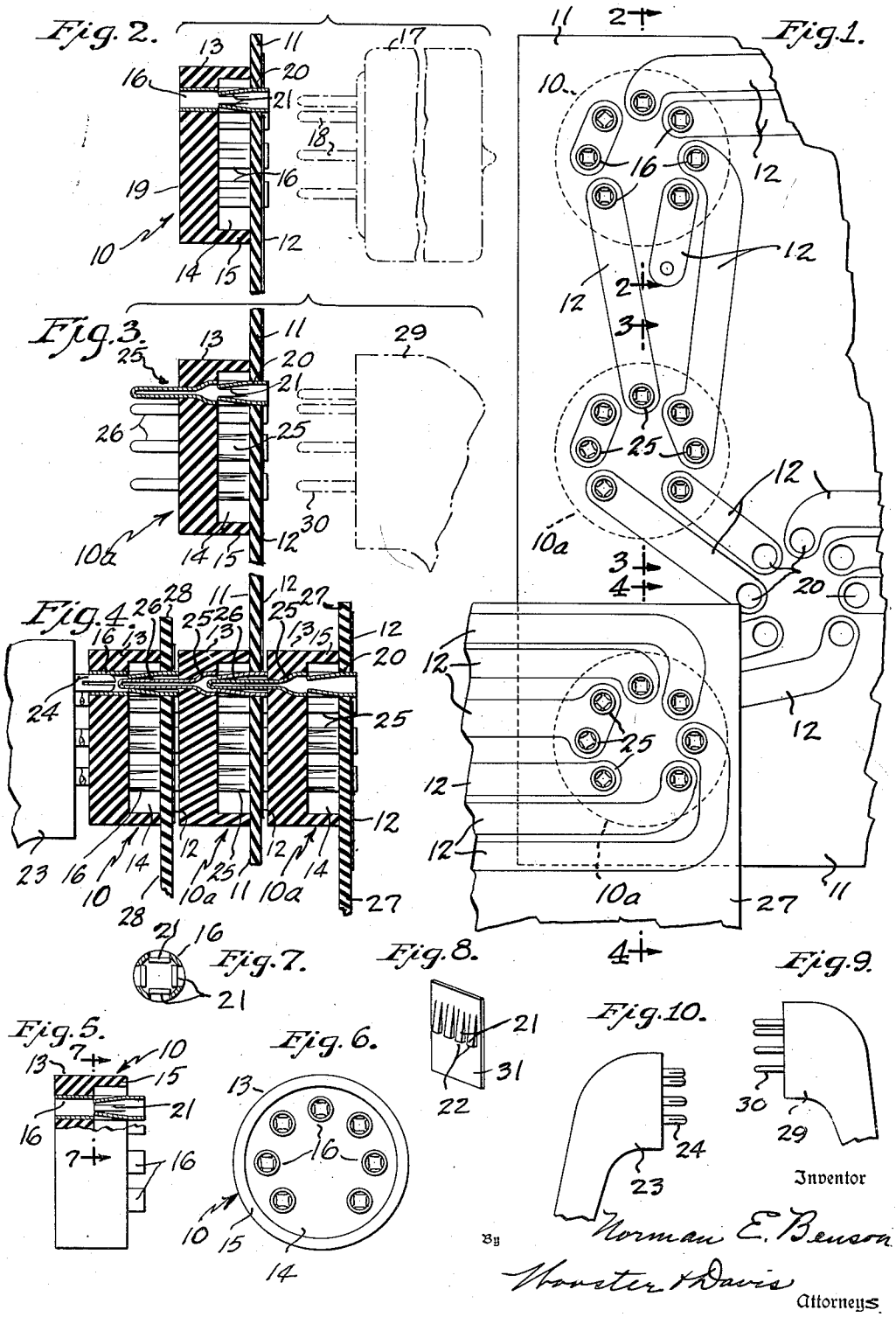


Inventor

Norman E. Benson

By Wooster & Davis

Attorneys

United States Patent Office 2,977,562
Patented Mar. 28, 1961



2,977,562

# DIP SOLDERED PRINTED CIRCUIT SOCKETS

Norman E. Benson, Westport, Conn., assignor to The Acme Wire Company, Hamden, Conn., a corporation of Connecticut

Filed Dec. 8, 1954, Ser. No. 473,814

1 Claim. (Cl. 339—17)

This invention relates to printed circuit sockets for various electronic devices, such, for example, as electronic tubes, resistors, and the like, and has for an object to provide a simple and effective socket for use with printed or etched circuits which will be simple in construction and will not materially weaken the sheet or panel of insulating material on which the circuit is printed or etched, and may be used for a number of different purposes and for connecting different devices in the circuits, such, for example, as relays, electronic tubes, transformers, capacitors, rectifiers, transistors, cable connectors and the like.

A particular object is to provide a device of this character which will have small space requirements in its use in circuits involving these devices, and also permit easy handling in assembly and use, saving space and time.

With the foregoing and other objects in view, I have devised the construction illustrated in the accompanying drawing forming a part of this specification. It is, however, to be understood the invention is not limited to the specific details of construction and arrangement shown, but may embody various changes and modifications within the scope of the invention.

In this drawing:

Fig. 1 shows a front view of a panel with printed or etched circuits applied to the front surface thereof and showing some of these sockets applied thereto;

Fig. 2 is a transverse section of a portion of this panel and the socket mounted therein taken substantially on line 2—2 of Fig. 1;

Fig. 3 is a similar view taken substantially on line 3—3 of Fig. 1;

Fig. 4 is a sectional view taken substantially on line 4—4 of Fig. 1 indicating how these sockets can be used to connect and combine a number of panels in which these sockets have been mounted and connected to the printed or etched circuits applied to them;

Fig. 5 is a partial side elevation and partial section of the socket of Fig. 2 removed from the panel;

Fig. 6 is an end view looking from the right of Fig. 5;

Fig. 7 is a detail sectional view of one of the socket tubes taken substantially on line 7—7 of Fig. 5 and on a somewhat larger scale;

Fig. 8 is a perspective view of one of the blanks from which these tubes may be formed;

Fig. 9 is a side elevation of a test plug for circuitry which may be used with these sockets, and

Fig. 10 is a similar view of a test plug for tube testing which may be used with the form of socket of Figs. 2 and 5.

As previously indicated, Fig. 1 shows a portion of a panel 11 which in this case comprises a sheet of insulating plastic material of the desired thickness, such material being, for example, phenolic products such as "Bakelite" or "Micarta" and similar insulating materials on the surface of which are printed or etched conducting circuits, a number of different shapes and lengths of



which are indicated at 12, but throughout the specification and claims the term "printed circuit" will be used in a generic sense to indicate either form. The improved sockets shown used with and mounted in this panel are the same except that they indicate the use of two different types of socket tubes or conductors. The form shown at 10 in Fig. 1 comprises a circular body member 13 of suitable insulating material, such, for example, as a molded plastic recessed on one side, as indicated at 14, to reduce the amount of material required, thus forming a circular flange or rim 15. Mounted in this insulating body are a plurality of socket or conductor tubes 16 arranged in a circle and spaced according to a pattern or arrangement of projecting contact pins in the base of an electronic device such, for example, as a relay tube, capacitors, transistors, and so forth, an electronic tube being indicated in broken lines 17 and the contact pins being indicated at 18. These conductor tubes 16 are mounted in the body member 13, preferably by molding them therein, and if found desirable or necessary they may be more securely anchored by roughening or knurling their outer surfaces to secure a better grip with the insulating material. In the form shown the tubes are open at both ends and substantially flush with the outer or rear side 19 of the body, and at their other ends projecting beyond the plane of the free edge of the rim 15 sufficiently to extend through correspondingly positioned openings 20 of the same size as these tubes formed in the panel 11. The printed circuit conductors 12 are led to these openings, as indicated in Fig. 1, and therefore when the projecting ends of the conductor tubes 16 are inserted through these openings they are in their respective conductors 12 of the printed circuits. A good electrical connection between these tubes and their respective conductors is then secured by soldering the tubes to the conductors, preferably by dip soldering, as this is a rapid and effective means for securing the proper soldered electrical connection, and effects all of the connections in one operation. With such a socket so mounted on the panel and with its conductor tubes electrically connected with the respective elements of the printed circuits on the panel, electrical devices involving contact pins similar to those shown at 18 on the base of the electronic tube 17 can be connected in these printed circuits by merely inserting the pins in the conductor tubes or sockets 16, either from the front or the back of the panel. The conductor tubes 16 may be provided with means for insuring a better grip and therefore electrical connection with the inserted pins, such for example, as by knurling on the inner surfaces or preferably by providing them with a series of inclined spring fingers 21 lanced from and bent laterally inward from the wall of the tube, thus providing relatively sharp free edges 22 which will grip the sides of the inserted pins such as 18 and retain them in the sockets and provide a good electrical connection between these pins and the sockets.

Other forms of electrical devices may be inserted in the opposite side of this socket such, for example, as the tube plug indicated at 23 in Fig. 10 provided with split male conductor pins 24. These could be inserted from the rear side of the socket 13 for testing purposes, while the tube 17 is inserted in the socket from the other side, the pins 24 of course being connected to suitable conductors (not shown) leading to the test apparatus.

The socket shown at 10*a* in Fig. 3, although of the same general form as that of Fig. 2, and comprising the same insulating body member 13, has a different type of conductor or socket tube 25 mounted therein. These socket tubes are the same as the tube 16 in Fig. 2 at the forward side of the body member 13, but instead of being open at the rear side they comprise projecting conductor pins 26. This socket is mounted in the panel 11

the same as that of Fig. 2, the forward open end portions of the socket tubes **25** projecting through the openings **20** in the panel arranged in a circle corresponding to the pattern of the contact pins of the electrical devices to be used therewith, and soldered to the conductors **12** of the printed circuits, the same as in the first form, the only difference between the two being that the socket tubes **16** in the first form are open at both ends so that electrical devices with projecting contact pins may be inserted in the sockets from either the front or back of the panel. In the form of Fig. 3 the conductor sockets tubes **25**, instead of being open at both ends, are open at the front end only, so the electrical devices with these projecting pins can be inserted in this socket from the front side of the panel only, but other electrical devices with socket conductor tubes can be applied to the rear side of this socket by inserting these projecting pins **26** into the open ends of the socket tubes in such devices. Thus, for example, in Fig. 4, a second panel **27** of insulating material in which is mounted one of these sockets may be applied to the socket mounted in the panel **11** by inserting its projecting pins **26** in the socket mounted in this panel. Similarly, a third insulating panel **28** having a socket like that of Fig. 2 can be connected to the projecting pins **26** of the socket mounted in panel **11**, and in this case the pins **24** of a test plug **23** can be inserted in the conductor tube sockets **16** of this socket, thus connecting the pins of this plug with the corresponding sockets in each of the panels **11**, **27** and **28** and the conductors of the printed circuits applied to these panels, and any number of these panels may be built up one above the other as found desirable.

Fig. 9 indicates a test plug **29** for circuitry which may be used with either form of the socket shown. It has the projecting conductor pins **30** arranged in the same pattern as the socket tubes **16** or **25** to be inserted in either form of socket from the front of the panel (as indicated in broken lines Fig. 3), the pins **30** being connected to suitable conductors (not shown) leading to the test device.

In Fig. 8 there is shown a blank comprising a sheet metal member **31** in which the spring tongues **21** are lanced and bent laterally, and which may be rolled into a tubular form to form the socket member **16**, or if made longer could be used for the tubular conductors **25**.

It will be seen from the above that this is a very simple and effective socket for use in connecting electronic devices in printed or etched circuits on an insulating panel, and as indicated, can be used for split test plugs for tubes or test plugs for circuitry, and can be formed as merely a tube socket, as shown in Fig. 2, or



as a combination tube and plug socket, as shown in Fig. 3. It can be used for various electronic devices to connect them in the printed circuits by merely plugging them into these pockets, such devices being, for example, electronic tubes, relays, transformers, capacitors, rectifiers, transistors, cable connectors and so forth, and any number of pins or tube sockets in different patterns may be used. It will be evident that it has small space requirements, which is a particular advantage of this construction, and also provides easy handling in assembling, saving both space and time. Also as mounting of the socket in the panel requires only the openings **20**, one for each tube socket, they do not objectionably weaken the phenolic or other plate or base of insulating material as no large hole is required in this plate. It may be used primarily in radar control, hearing aids, various electronic combinations, or electronic circuits, guided missiles, and so forth, where its small space requirements and simplicity are very material advantages.

Having thus set forth the nature of my invention, I claim:

In combination, an electronic device having projecting contact pins arranged in a predetermined pattern, a socket supporting panel comprising a sheet of insulating material of a thickness substantially less than the projecting length of said pins, printed or etched circuit conductors on one surface of said panel, a socket unit comprising a body of insulating material of substantially greater thickness than the thickness of said panel and located on the opposite side of said panel from the said conductors, and a series of conductor tubes fixedly secured in said body and arranged in a pattern corresponding with the arrangement of said contact pins of said electronic device, each said tube being of substantially greater length than the projecting length of said pins and having an open end projecting from said body a distance at least equal to the thickness of said panel and substantially less than the projecting length of said pins, said panel and conductors having holes corresponding in arrangement to said tubes, and said tubes having their open projecting ends inserted in said holes and soldered to said conductors and supporting said body of said socket unit against one side of said panel.

**References Cited** in the file of this patent

UNITED STATES PATENTS

| | | |
|---|---|---|
| 2,290,172 | Eby | July 21, 1942 |
| 2,401,430 | Lake | June 4, 1946 |
| 2,481,951 | Sabee et al. | Sept. 13, 1949 |
| 2,519,121 | Del Camp | Aug. 15, 1950 |
| 2,760,176 | Del Camp | Aug. 21, 1956 |