Dec. 1, 1942. R. F. ROPER 2,303,865

AIR CONDITIONING APPARATUS

Filed July 25, 1938 3 Sheets-Sheet 1

Fig. 1.

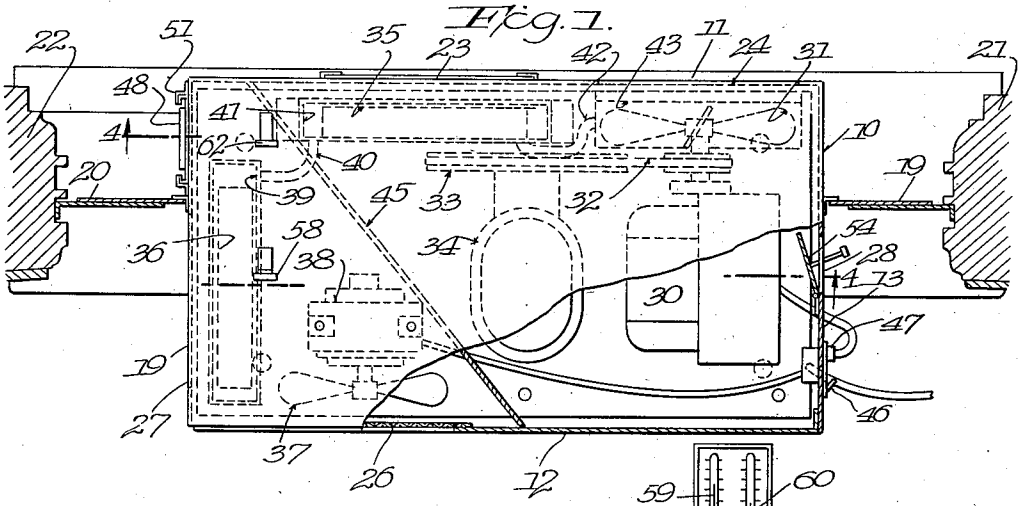

Fig. 4.

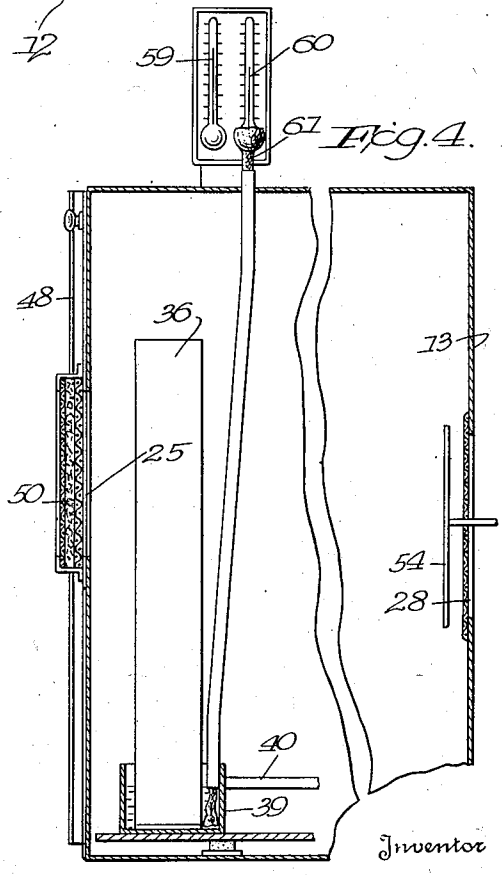

Fig. 3.

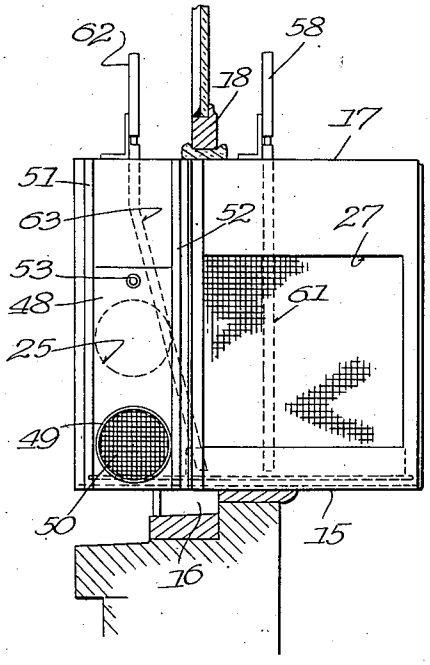

Inventor

Richard F. Roper.

By Cushman Darby & Cushman

Attorneys

Dec. 1, 1942. R. F. ROPER 2,303,865

AIR CONDITIONING APPARATUS

Filed July 25, 1938 3 Sheets--Sheet 2

Fig. 2

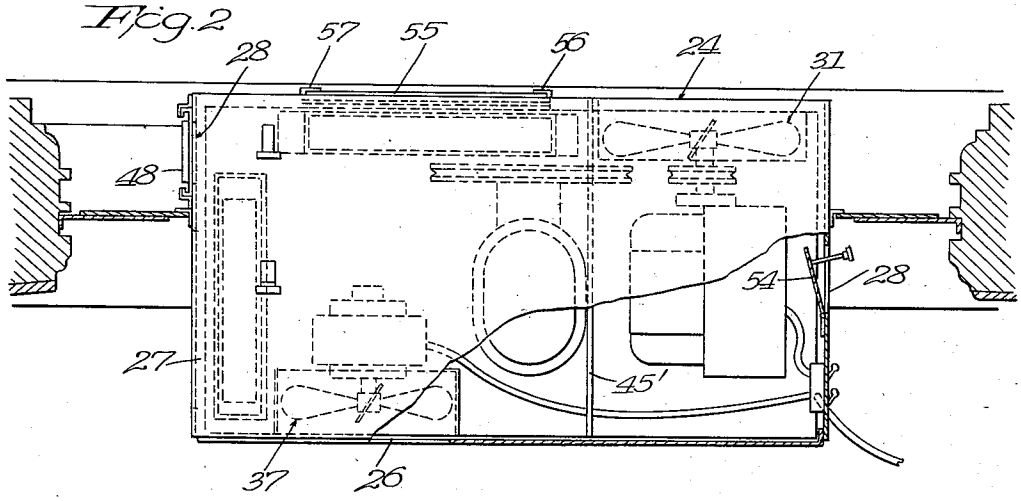

Fig. 8.

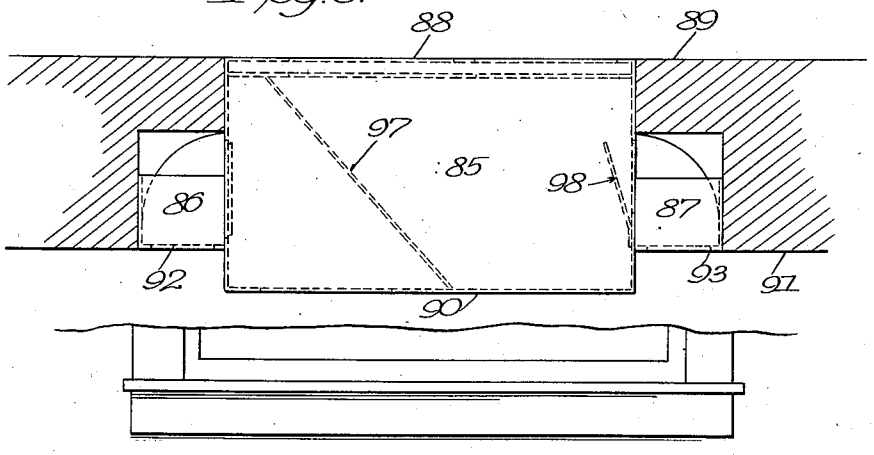

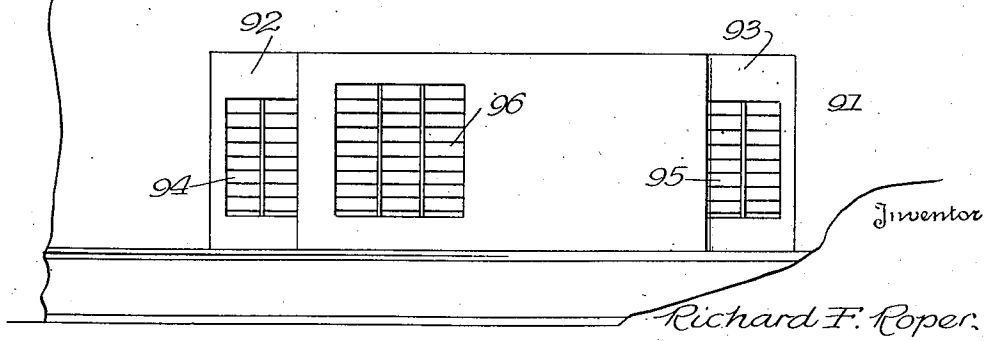

Fig. 9.

Inventor

Richard F. Roper.

By Richman Darby & Richman.

Attorneys

Dec. 1, 1942. R. F. ROPER 2,303,865

AIR CONDITIONING APPARATUS

Filed July 25, 1938 3 Sheets-Sheet 3

Fig. 5.

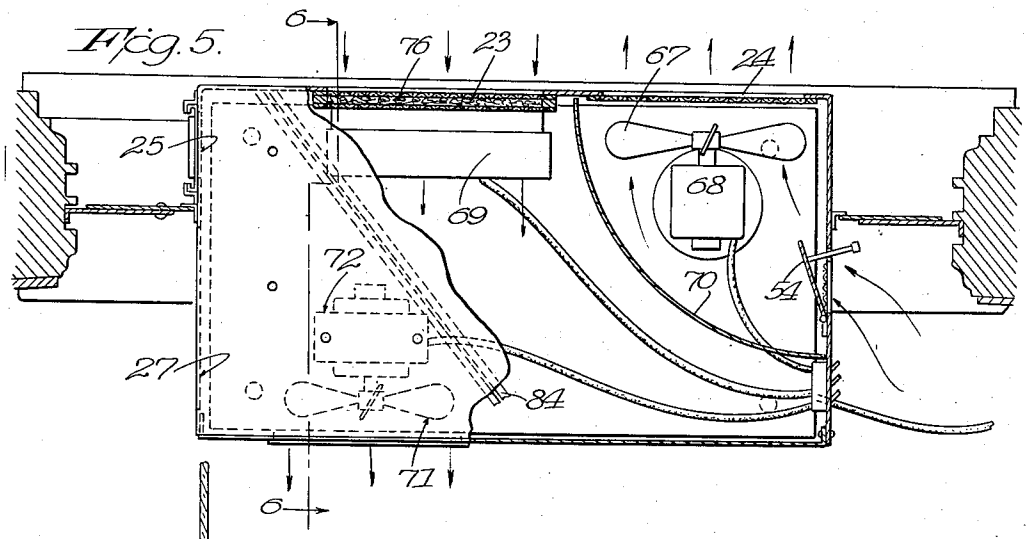

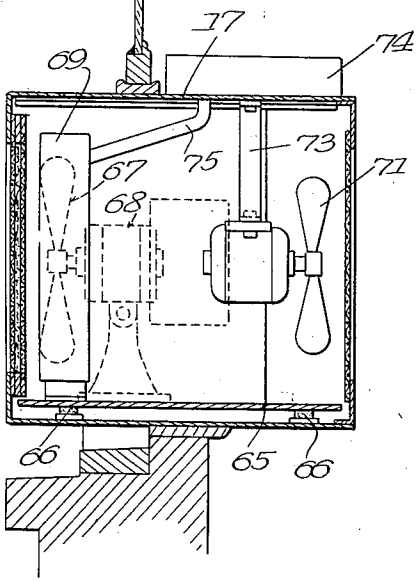

Fig. 6.

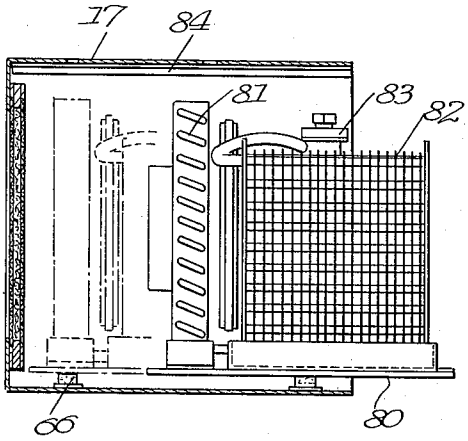

Fig. 7.

Inventor

Richard F. Roper.

By Cushman Darby & Cushman.

Attorneys

Patented Dec. 1, 1942

2,303,865

UNITED STATES PATENT OFFICE

2,303,865

AIR CONDITIONING APPARATUS

Richard F. Roper, Chevy Chase, Md., assignor to Pleasantaire Corporation, Washington, D. C., a corporation of Delaware

Application July 25, 1938, Serial No. 221,226

8 Claims. (Cl. 62—140)

This invention relates to air conditioning apparatus. More particularly, it provides an improved unit apparatus, for conditioning indoor air in both winter and summer.

The primary object of the invention is to provide an apparatus of the class described which is convertible for use in the summer as a cooling and dehumidifying mechanism and in the winter as an air circulating, ventilating, heating and humidifying system. The invention contemplates a plurality of alternative constructions for accomplishing this object. In one form, the apparatus is contained in a suitable casing, and means are provided, when it is desired to convert the apparatus from a cooling and dehumidifying mechanism to a ventilating mechanism, for rendering the compressor unit of the refrigerating apparatus inoperative. Second, the air inlet means, previously used to cool the condenser of the refrigerating unit is blocked off, partially or entirely. By the provision of appropriate partitions and vents, the fan normally used to circulate the air in the room past the evaporator coils of the refrigerating unit is used to circulate the air in the room and to supply additional outside air for ventilating purposes, if desired. The fan normally used for cooling the condenser of the refrigerating unit may be employed as an exhaust fan to expel stale and spent air from the room. Thus, in order to convert the apparatus from a cooling and dehumidifying machine to a ventilating and circulating machine, for winter use, it is only necessary to disconnect the compressor unit, partially or completely close the air inlet for the condenser, shift a single partition, and open or close the ventilating and air circulating openings as desired. Preferably, separate and independently controlled fans are used for circulation and exhaust purposes.

In a second form of the invention, there is provided a casing adapted to receive, alternatively, a refrigerating and dehumidifying unit, and a circulating, ventilating, heating and humidifying unit. Preferably, the units are mounted on two independent bases or platforms, adapted to be interchangeably received in the casing, depending upon the use to which the apparatus is to be put. In this form of the invention, when the apparatus is to be used, for instance in the summer time, for cooling and dehumidifying purposes, the air in the room is circulated repeatedly by an appropriate fan, through a compartment in the casing past the evaporator unit of a refrigerating apparatus. The other elements of the refrigerating apparatus, including the condenser, the compressor, the motor, and a fan for circulating condenser cooling air are mounted within the casing, in a compartment partitioned off from the compartment containing the evaporator. When this apparatus is adapted to be used for air circulating, ventilating, heating and humidifying purposes, it is only necessary to remove, from the aforesaid casing, the units positioned therein on a suitable base, and to substitute therefor, a different base member upon which are supported an electric heater, and appropriate circulating and exhaust fans. If desired, a source of water for humidifying purposes may be associated with the electric heater.

The invention further contemplates a novel form of casing for air conditioning equipment of the class described, which is adapted to be built into the wall of a building so that one or another unit may be inserted therein, depending upon the purpose for which the equipment is to be used. If desired, however, a cooling and dehumidifying unit in such a casing may be converted for winter use into an air circulating, ventilating, heating and humidifying apparatus as previously described, without physically removing the compressor and condenser units.

In the accompanying drawings, a plurality of embodiments of the invention are disclosed, but it must be understood that the invention is not limited to the specific details thereof, since many modifications will readily occur to one skilled in the art.

In the drawings,

Figure 1 is a top plan view, partly in horizontal section, of a casing and air conditioning unit therein, with the elements set up to render the cooling unit operative.

Figure 2 is a similar view with the cooling unit rendered inoperative.

Figure 3 is an end view looking from the left of Figure 1.

Figure 4 is a vertical, sectional view taken substantially on line 4—4 of Figure 1.

Figure 5 is a plan view, partly in horizontal section, of a modified form of the invention.

Figure 6 is a vertical, transverse section taken on line 6—6 of Figure 5.

Figure 7 is a similar view showing the manner in which the air cooling and dehumidifying unit may be substituted for the ventilating and circulating unit shown in Figures 5 and 6.

Figure 8 is a horizontal section through a modified form of casing, and

Figure 9 is a front elevation of the casing of Figure 8.

The apparatus shown in Figure 1 is, in many respects, similar to the structure disclosed and claimed in the patent granted to Guy Paschal, 2,120,208, June 1, 1938. Reference is made to that patent for a more detailed disclosure of a preferred arrangement of parts. The casing of the present application includes a number of specific improvements adapted to increase the flexibility of the apparatus and to enable the same to be converted from a cooling and dehumidifying machine to a ventilating apparatus.

The casing 10 comprises a vertical outside wall 11, a removable, vertical, inside wall 12, end walls 13 and 14, bottom wall 15 adapted to be supported at 16 upon a window sill and a top wall 17, upon which a window sash 18 may be closed. The casing is provided with laterally projecting, adjustable plates 19, 20, adapted to close the space between the side walls of the casing and the uprights 21, 22 of the frame for the window opening.

The exterior wall of the casing is provided with an air inlet opening 23 and an outlet opening 24. The outwardly disposed portion of the end wall 14 is provided with a supplemental air inlet opening 25, for the purposes described below. The portion of the casing disposed interiorly of the building wall includes an air outlet opening 26, and air inlet opening 27 and a supplemental inlet opening 28.

The units of the air cooling and dehumidifying apparatus are preferably arranged in the casing in accordance with the disclosure of the aforesaid copending application, except that they are preferably supported on a removable platform 29, as shown in Figures 1, 2 and 3. An electric motor 30 drives a fan 31 to circulate outside air through one portion of the casing, to cool the hot side of the refrigerating apparatus. A belt 32, driven by the motor 30, transmits power to a pulley 33 associated with the compressor 34. A condenser 35, in the refrigerating circuit, is disposed behind the opening 23, to be cooled by air drawn through that opening by the fan 31. The evaporator 36 is positioned in the casing behind the opening 27, in position to cool air drawn through that opening by a fan 37 driven by motor 38. The cool air is blown into the room by the fan 37 through the opening 26. As explained in the foregoing application, the water of condensation which is collected in a pan 39 under the evaporator 36 flows through a conduit 40 to a reservoir 41 under the condenser, and thence through a conduit 42 to a pan 43 associated with the fan 31, where said water may be expelled to the outside by that fan.

A partition 45 is removably supported in the casing and, as shown in Figure 1, the same is disposed on a vertical plane disposed diagonally with respect to the walls of the casing, to separate the casing into two compartments, one of which contains the hot side element of the refrigerating apparatus and an air circulating fan, and the other of which contains the cold side of the apparatus and a room air circulating fan. The partition may be mounted in any approved manner, so long as it may be readily removed when the front wall 12 is removed, for purposes hereinafter specified.

Preferably, the motor 38 and the motor 30 are controlled by independent switches 46, 47 so that their operations may be controlled at will.

Adjacent the opening 25, in the wall 14, there is positioned a slide 48 having an opening 49 therein, provided with a filter 50. The slide is guided for vertical movement in the ways 51, 52 and, by means of an appropriate handle 53, it may be raised and lowered, to close the opening 25 or to bring the filter 50 in cooperative relation thereto, if it is desired to admit additional outside air to the comparement on the left of the partition 40.

The opening 28, at the opposite end of the casing, may be closed or opened to any desired degree by means of a door 54 associated therewith to permit the fan 31 to exhaust a regulated amount of spent air from the interior of the room.

When the parts are arranged as shown in Figure 1, it will be apparent that the fan 37 will circulate room air past the evaporator 36, to cool that air and to lower the humidity thereof by the condensation of water on the cold surfaces of the condenser. The hot side of the refrigerating apparatus is appropriately cooled by the circulation of air inwardly through the opening 23, past the condenser 35 and out through the opening 24, that circulation being effected by the fan 31.

When it is desired to convert the apparatus to a simple ventilating mechanism, for instance, for use in the winter time, the belt 32 should be removed, thereby rendering the compressor and the refrigerating apparatus inoperative. The partition 45 may be removed and a narrower partition 45' substituted therefor, in the position shown in Figure 2 in a plane disposed at right angles to the front and rear walls of the casing and between the opening 23 and the opening 24. A closure plate 55 may be utilized to close the opening 23 partially or entirely, depending upon the position it is caused to assume in the slideways 56, 57. The opening 25 may be opened more or less, or closed entirely, depending on the position of the slide 48. Likewise, the effective size opening 28 may be varied at will by the door 54.

Operation of the fan 31 will serve to exhaust air from the room through the opening 28 and to expel the same to the outside atmosphere through the opening 24. Operation of the fan 37 will circulate room air through the opening 27 and out into the room through the outlet opening 26. Moreover, outside air may be drawn in and added to the room air through the openings 23 and 25. Thus, when converted as shown in Figure 2, the apparatus serves to circulate the room air and, if desired, to add fresh air to the room and to exhaust spent air therefrom.

As shown in Figures 3 and 4, novel means are provided for indicating the amount of dehumidification and cooling change, effected by the apparatus of the present invention when used for that purpose in the summer time. On the inside of the window 18, and on the upper wall of the casing there is positioned a bracket 58, upon which is mounted a dry bulb thermometer 59 and a wet bulb thermometer 60. The latter is connected by a wick 61 with the trough 39 below the evaporator 36 and derives its moisture therefrom. Exteriorly of the building a similar bracket 62 is positioned, also having a dry bulb thermometer and a wet bulb thermometer mounted thereon. By means of the wick 61, the wet bulb thermometer associated with that bracket receives moisture from the same source of supply, i. e., from the trough 39 below the evaporator.

Thus, the humidity and temperature both inside and outside of the building can be determined at a glance by comparing the wet and dry bulb thermometers subjected to interior and exterior temperatures and humidities.

In the form of the invention shown in Figures 5, 6 and 7, the apparatus may be converted from use as a cooling and dehumidifying apparatus to a heating, humidifying, air circulating and ventilating apparatus. A casing similar to or identical to that shown in the first form may be employed, and like reference characters refer to like parts. As shown in Figure 5, the device is adapted for use as a heating, ventilating and circulating apparatus. A platform 65 is adapted to be removably supported on rubber studs 66 within the casing. Upon the platform there is removably mounted an air circulating fan 67 driven by a motor 68, an electric heater 69 and an arcuate partition 70, separating the fan from the heater. An air circulating fan 71 and its motor 72 may be hung from the top wall 17 by an appropriate bracket 73. The fan 71 corresponds to the fan 37 shown in Figures 1 and 2.

Any approved means may be employed for supplying water to the electric heater for humidifying purposes. As shown in Figure 6, a reservoir 74 is supported above the top wall 17, and a conduit 75 delivers water to the heater 69, where it is vaporized to increase the humidity of the air. Preferably, the air inlet opening 23 is provided with a filter 76, comprising spaced wire mesh screens and an intermediate packing of foraminous material, such as wool.

With the parts constructed as shown in Figures 5 and 6, the fan 67 will serve to exhaust stale, spent air from the room and blow the same outwardly through the opening 24 to the outside atmosphere. The fan 71 will draw fresh outside air in through the filter 76 positioned in the opening 23, past and through the heater 69 and thence through the opening 26 into the room. The incoming air will be heated and humidified. Simultaneously, the fan 71 will circulate room air inwardly through the opening 27 and outwardly through the opening 26. Thus, the apparatus will effect a simultaneous heating, circulating and ventilating operation.

When it is desired to convert the apparatus for use as a cooling and dehumidifying machine, it is only necessary to remove the platform 65 and the parts supported thereby and to substitute a refrigerating unit mounted on a platform 80. As shown in Figure 7, the platform 80 serves as a support for a condenser 81, an evaporator 82, a compressor 83 and the other elements of the refrigerating apparatus. The platform 80 is adapted to be supported in spaced relation to the floor of the casing by the resilient studs 66, referred to above. When the refrigerating unit is in place, the several elements thereof will be disposed in the positions indicated in Figure 1. If desired, instead of using the fan 71 hung from the ceiling, each of the platforms 65 and 80 may be provided with a second pedestal fan supported thereon, thereby avoiding the necessity of removing the brackets 73 when the apparatus is to be converted from one use to the other. A diagonally disposed partition similar to that shown at 45 in Figure 1 may be supported directly by the platform 80, to separate the hot side of the refrigerating apparatus from the cold side, or, in the alternative, a similar partition may be removably mounted in the casing and held in place by a pair of spaced flanges 84 mounted on the undersurface of the top wall 17, as shown in Figure 7.

When the platform 65 and the part supported thereby have been removed and the refrigerating apparatus supporting platform 80 substituted therefor, the apparatus will function substantially in the manner heretofore described with reference to the form of device shown in Figure 1. Thus, the invention provides the combination of a novel form of casing adapted to receive, alternately and interchangeably, two different types of air conditioning units, one for cooling and dehumidifying the air in a room, and the other for heating, humidifying, circulating and ventilating the air in a room.

Figures 8 and 9 show a modified form of casing adapted to be built into the wall of a building. This casing comprises a central portion 85 and laterally projecting box-like conduit portions 86, 87. The central portion has an outside wall 88 substantially flush with the outer surface 89 of the building wall, and an inner surface 90 projecting into the room a short distance beyond the interior surface 91 of the building wall. The laterally projecting conduit boxes 86, 87 have their front faces 92, 93 substantially flush with the interior surface of the building wall 91. The openings in the conduit boxes may be provided with louvres 94, 95 and the opening associated with the central portion of the casing may have similar means 96 disposed therein. The central portion of the casing is provided with a diagonal partition wall 97 and the various air conditioning units (not shown) may be positioned therein after the manner shown in the previously described figures. A door 98 may be controlled by any appropriate mechanism to vary the effective opening of the air exhaust through the box 87, for a purpose similar to the door 54 shown in Figures 1 and 2.

The front wall 90 of the central casing section is removable, to provide access to the interior thereof, either to effect a change-over of the type exemplified in Figures 1 and 2, or to permit the substitution of one type of air conditioning unit mounted on a platform 65 for the type mounted on the platform 80.

As stated above, the invention is not limited to the specific details shown in the accompanying drawings and described above, but includes all such modifications as come within the scope of the appended claims or their equivalents.

I claim:

1. An air conditioning apparatus, convertible for cooling and dehumidifying air and for circulating indoor air and ventilating a room, comprising a refrigerating apparatus, a removable partition separating the hot side thereof from the cold side, a fan for circulating outside cooling air in heat exchange contact with the hot side, a second fan for circulating room air in heat exchange contact with the cold side, means for converting the first fan into an exhaust fan for room air and for converting the second fan into a fresh air intake fan, said means comprising a second removable partition adapted to be substituted for the first-mentioned partition in a different position in said casing.

2. An air conditioning apparatus, convertible for cooling and dehumidifying aid and for circulating indoor air and ventilating a room, comprising a casing having normal inside and outside air inlet and outlet openings and auxiliary inside and outside openings, and movable partition means for said casing, said means in one position serving

to separate the normal outside openings from the normal inside openings, whereby inside and outside air may be circulated through the casing along separate paths, said partition means in another position serving to establish communication between an auxiliary inside opening and the outside outlet opening and between an auxiliary outside inlet opening and the inside outlet opening.

3. Air conditioning apparatus, convertible for cooling and dehumidifying indoor air and for circulating such air and ventilating a room, comprising a casing having end and side walls disposed indoors and outdoors, the outdoor walls having air inlet and outlet openings, the indoor walls also having inlet and outlet openings, a fan and a compressor-condenser unit associated with the outdoor wall openings, a fan and an evaporator unit associated with the indoor wall openings, means for securing partition means in the casing to provide separate compartments for said units and their respective fans for cooling and dehumidifying the indoor air, means for rendering the compressor-condenser unit inoperative, means for securing partition means in a different place in the casing to provide separate compartments, each having a fan therein, and an outdoor opening and an indoor opening, and means for varying the effective area of at least one of the openings in each compartment.

4. Air conditioning apparatus, convertible for cooling and dehumidifying indoor air and for circulating such air and ventilating a room, comprising a casing having end and side walls disposed indoors and outdoors, the outdoor side wall having air inlet and outlet openings, the indoor end and side walls respectively having air inlet and outlet openings, a refrigerating mechanism in the casing comprising a compressor, a condenser adjacent the outdoor inlet opening, a condenser cooling air fan adjacent the outdoor outlet opening, an evaporator adjacent the indoor inlet opening and a fan adjacent the indoor outlet opening; means to position removably a wall in the casing to partition the compressor, condenser and associated fan from the evaporator and its fan, and additional partition wall positioning means to partition the first-mentioned fan and its adjacent opening from the outdoor air inlet, the second-mentioned fan and its adjacent openings.

5. An apparatus in accordance with claim 4, characterized in that said casing is provided with a supplemental outdoor air inlet opening in a wall adjacent the indoor air inlet opening, and a supplemented indoor air inlet opening adjacent the outdoor air outlet opening.

6. A casing for air conditioning equipment, comprising walls disposed outside and inside of the building, the outside walls having normal outside air inlet and outlet openings and a supplemental outside air inlet opening, the inside walls having normal room air inlet and outlet openings and a supplemental room air inlet opening, means for supporting partition means in two different positions, alternatively, said means in one position serving to separate the normal outside air openings from the corresponding room air openings and in the other position serving to establish communication between the normal outside inlet opening and the normal room air openings, and means for varying the effective areas of the outside air openings and the supplemental room air opening.

7. A casing for air conditioning equipment, comprising walls disposed outside and inside of the building, the outside walls having normal outside air inlet and outlet openings and a supplemental outside air inlet opening, the inside walls having normal room air inlet and outlet openings and a supplemental room air inlet opening, partition means, means for supporting the same in two different positions, alternatively, said partition means in one position serving to separate the normal outside air openings from the corresponding room air openings while establishing communication between the supplemental outside inlet opening and the inside openings, and in the other position serving to establish communication between the normal outside inlet opening and the normal room air openings, and means for varying the effective areas of the outside air openings and the supplemental room air opening.

8. A casing for air conditioning equipment, comprising walls disposed outside and inside of the building, the outside walls having normal outside air inlet and outlet openings and a supplemental outside air inlet opening, the inside walls having normal room air inlet and outlet openings and a supplemental room air inlet opening, and means for supporting partition means in two different positions, alternatively, said partition means in one position serving to separate the normal outside air openings from the corresponding room air openings and in the other position serving to establish communication between the normal outside inlet opening and the normal room air openings, said means in the last-mentioned position serving to establish communication between the outside air outlet and the supplemental room air inlet.

RICHARD F. ROPER.