(No Model.)

M. HALL.

CAR COUPLING.

No. 456,409. Patented July 21, 1891.

Fig 1.

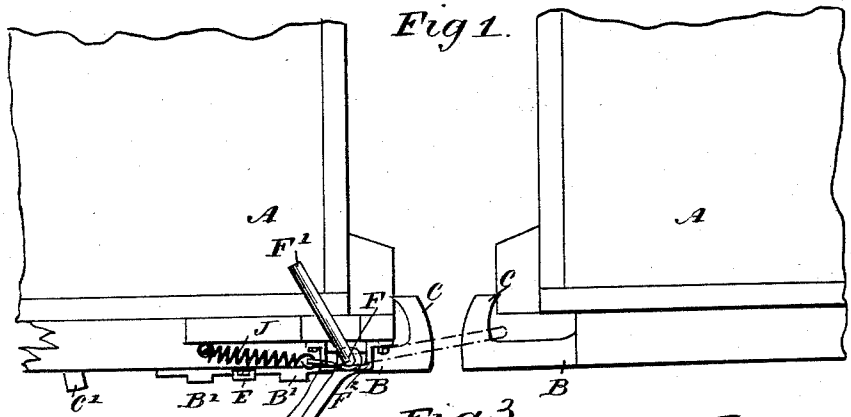

Fig 3

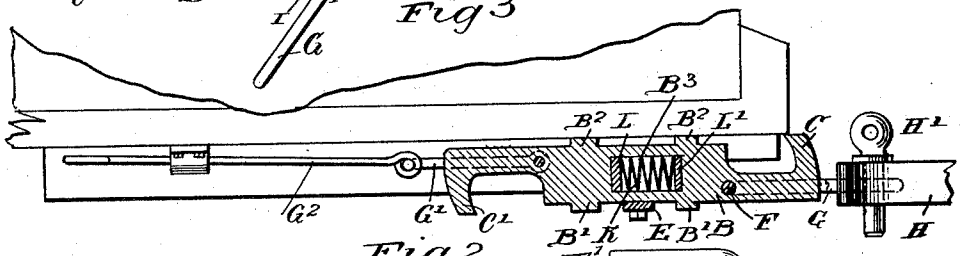

Fig 2.

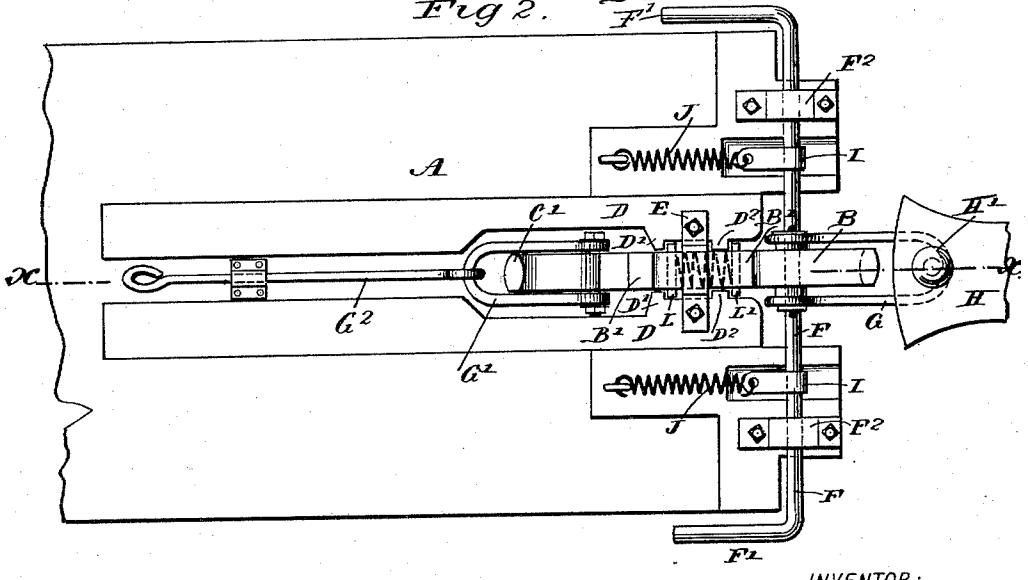

WITNESSES:

Paul Johst

E. M. Clark

INVENTOR:

M. Hall

BY Munn & Co

ATTORNEYS

THE NORRIS PETERS CO., PHOTO-LITHO., WASHINGTON, D. C.

UNITED STATES PATENT OFFICE.

MORALIS HALL, OF GREENFIELD, TENNESSEE.

CAR-COUPLING.

SPECIFICATION forming part of Letters Patent No. 456,409, dated July 21, 1891.

Application filed January 30, 1891. Serial No. 379,661. (No model.)

To all whom it may concern:

Be it known that I, MORALIS HALL, of Greenfield, in the county of Weakley and State of Tennessee, have invented a new and Improved Car-Coupling, of which the following is a full, clear, and exact description.

The object of the invention is to provide a new and improved car-coupling which is simple and durable in construction, securely couples two cars together, can be readily coupled and uncoupled without the operator stepping between the cars, and permits of coupling with cars of different heights, as well as with cars having the ordinary link-and-pin coupling.

The invention consists of certain parts and details and combinations of the same, as will be fully described hereinafter, and then pointed out in the claims.

Reference is to be had to the accompanying drawings, forming a part of this specification, in which similar letters of reference indicate corresponding parts in all the figures.

Figure 1 is a side elevation of the improvement as applied. Fig. 2 is an enlarged inverted plan view of the improvement, and Fig. 3 is a sectional side elevation of the same on the line *x x* of Fig. 2.

The improved car-coupling is applied to the under side of the car A and is provided with the draw-bar B, provided on its ends with hooks C C′, respectively, of which the hook C′ is used in case the other hook C has been broken off by an accident, so that a reversal of the draw-bar is necessary. The draw-bar B is fitted to slide longitudinally in suitable bearings D, formed on the under side of the car A. A cross-piece E, held on the said bearings, also serves to hold the draw-bar B in place between the bearings D, and at the same time serves to limit the forward and backward motion of the draw-bar by the abutting against it of either of the two projections B′, arranged on the said draw-bar in the front and rear of the said cross-piece E. As illustrated in Fig. 3, a second set of such projections B^2 is formed on the opposite or other side of the draw-bar B in case the latter is reversed, as previously mentioned.

On the front end of the draw-bar B is mounted a transversely-extending shaft F, reaching to the sides of the car and provided at its outer ends with handles F′ for conveniently turning the said shaft without the operator stepping between the cars. On the shaft F is secured a U-shaped link G, straddling the draw-bar B, the ends being secured to the shaft F, as plainly illustrated in the drawings. The middle or outer part of the link G is adapted to engage the hook C or C′ of the draw-bar of the next-following car, as plainly indicated in dotted lines in Fig. 1, so as to couple one car to the other. As illustrated in Fig. 3, the outer end of the link G is adapted to pass into the recess of a draw-bar H to be engaged by the ordinary coupling-pin H′.

An auxiliary link G′ is held on the rear end of the draw-bar B to straddle the rear hook C′, the said link G′ being connected by a bar G^2 or other means with a similar link held on the draw-bar of the other end of the car A. The link G′ is used in case of accident to the link G.

On the shaft F is secured one end of one or more straps I, each of which passes around the shaft F to connect at its other end with a spring J, secured to the under side of the car A. The spring or springs J serve to hold the shaft F in such a position that the link G stands under the car, as plainly indicated in Fig. 1.

Now when it is desired to couple two cars the operator turns the handle F′ on the side of the car, so that the link G swings upward and forward, and at the same time the straps I are swung out against the tension of the springs J. When the two draw-bars of the cars to be coupled come together, the operator releases the pressure on the handle F′, so that the spring or springs J, pulling on the strap or straps I, rotate the shaft F to swing the link G downward, which latter then engages the hook C of the draw-bar of the opposite car, or, as previously described, the operator holds the handle F′, so as to guide the link G into the recess of the draw-bar H, before mentioned. It will be seen that by this arrangement the springs J are under tension as long as the cars are coupled, thereby preventing displacement of the link G from the hook C of the opposite car, it being further under-

stood that the link G has the tendency to swing downward, owing to the pressure of the springs J, so that any accidental displacement of the link G from the hook C is prevented.

The draw-bar B is provided in its middle with a transversely-extending opening B^3, in which is arranged the spring K, abutting against two transverse bars L and L', adapted to rest against shoulders D' and D^2, formed on the inside of the bearings D. When the car is pulled forward, the link G pulls on the shaft F and the latter on the draw-bar against the tension of the spring K until the transverse bar L strikes against the shoulder D^2, so that a direct pull on the car is now exerted. Thus the draw-bar is yieldingly mounted on the under side of the car. The shaft F is also fitted to slide in bearings F^2, arranged on the under side of the car so as to relieve the draw-bar B from the weight of the said shaft and pin G, at the same time forming an additional support for the shaft and the draw-bar B.

Having thus described my invention, I claim as new and desire to secure by Letters Patent—

1. In a car-coupling, a draw-bar provided on its ends with hooks extending in opposite directions, substantially as shown and described.

2. In a car-coupling, a reversible draw-bar provided on its ends with hooks, and U-shaped links held on the said ends, substantially as shown and described.

3. In a car-coupling, the combination, with a draw-bar mounted yieldingly on the under side of the car and provided on its ends with hooks, of links made in U shape and held on the ends of the said draw-bar, the ends of the links passing to the sides of the draw-bar, substantially as shown and described.

4. In a car-coupling, the combination, with a yieldingly-mounted draw-bar provided at opposite ends with hooks, of a shaft mounted in the forward end of the draw-bar and provided with handles on its ends, a U shaped link secured to the shaft, and springs connected to the shaft, substantially as described.

5. In a car-coupling, the combination, with a yieldingly-mounted draw-bar provided with a hook at each end, said hooks extending in opposite directions, of a spring-actuated shaft mounted in one end of the draw-bar, a U-shaped link secured to the shaft, an auxiliary link secured to the opposite end of the draw-bar, and a bar secured to the link and adapted to be connected with a similar link on the draw-bar at the opposite end of the car, substantially as herein shown and described.

MORALIS HALL.

Witnesses:
N. J. HOLT,
JAS. H. BRAWNER.