No. 702,151. Patented June 10, 1902.

G. M. PETERS.

METALLIC CARTRIDGE LOADING MACHINE.

(Application filed Aug. 9, 1899.)

(No Model.) 9 Sheets—Sheet 1.

Fig. 1.

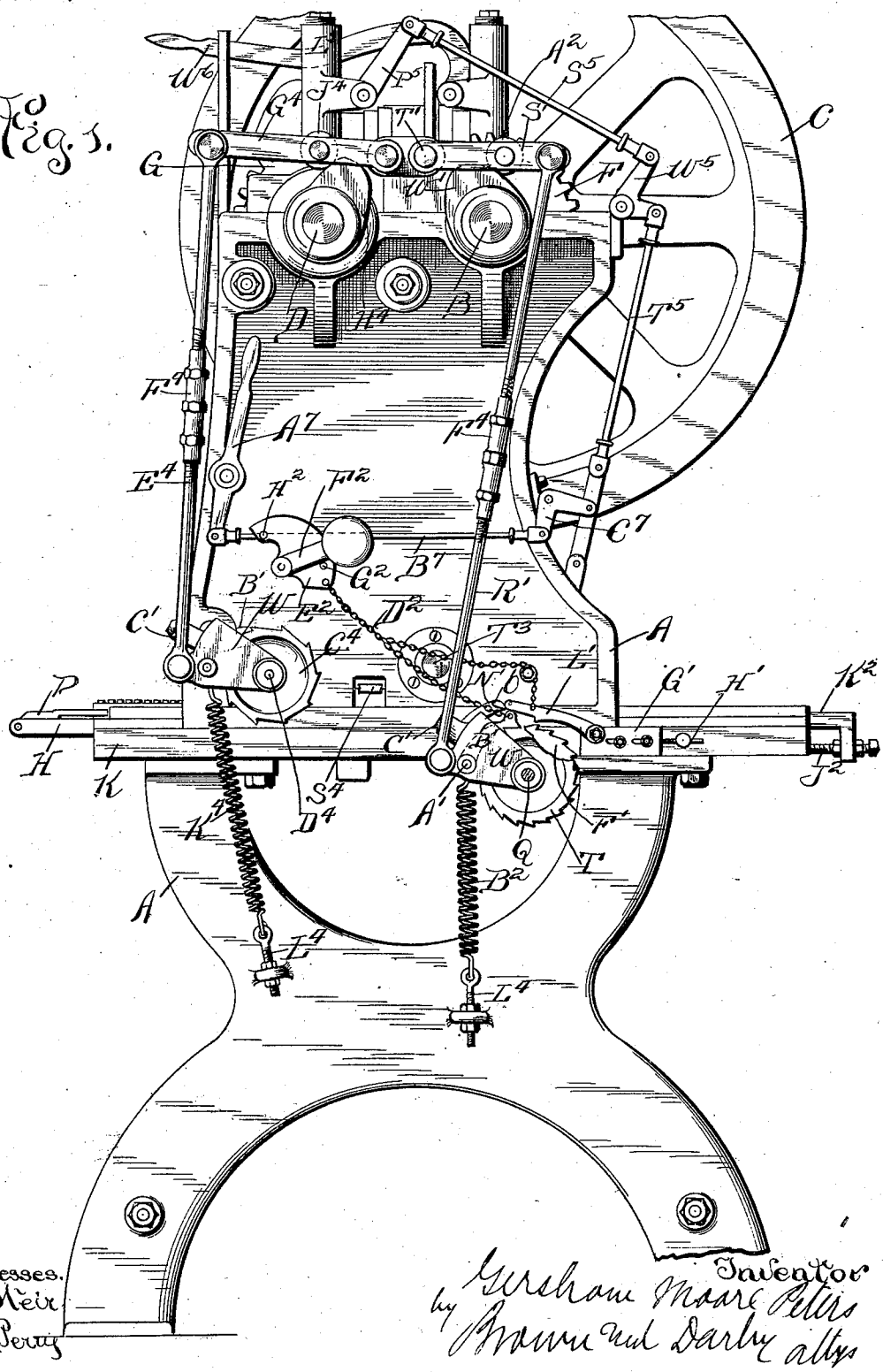

Witnesses.
J. B. Weir
J. S. Perry

Inventor
Gershom Moore Peters
by Brown and Darby attys

THE NORRIS PETERS CO., PHOTO-LITHO., WASHINGTON, D. C.

No. 702,151. Patented June 10, 1902.

G. M. PETERS.

METALLIC CARTRIDGE LOADING MACHINE.

(Application filed Aug. 9, 1899.)

(No Model.) 9 Sheets—Sheet 2.

Fig. 2.

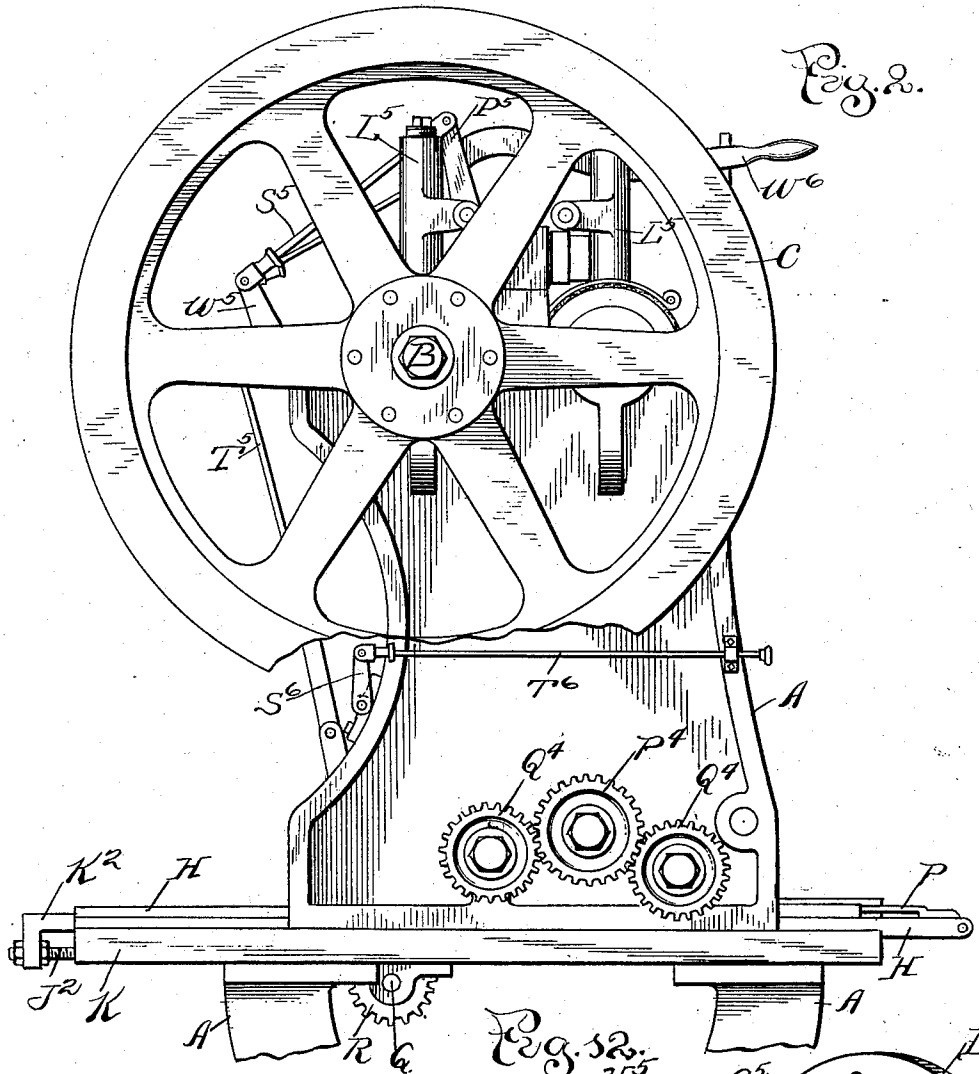

Fig. 12.

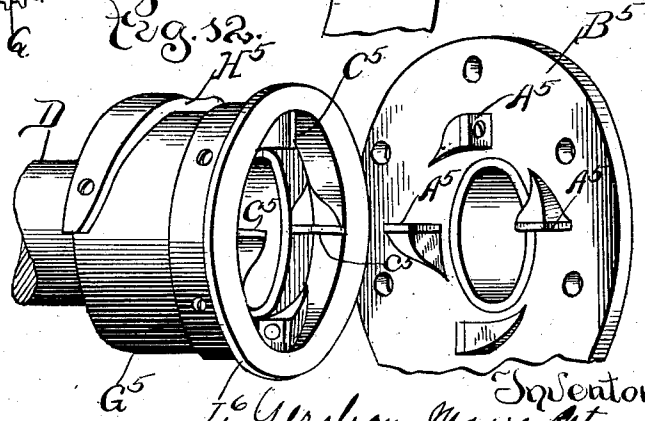

Witnesses:
J. B. Weir
Ira P. Perry

Inventor:
Gershom Moore Peters
by Brown & Darby attys

THE NORRIS PETERS CO., PHOTO-LITHO., WASHINGTON, D. C.

No. 702,151. Patented June 10, 1902.

G. M. PETERS.

METALLIC CARTRIDGE LOADING MACHINE.

(Application filed Aug. 9, 1899.)

(No Model.) 9 Sheets—Sheet 3.

Fig. 3.

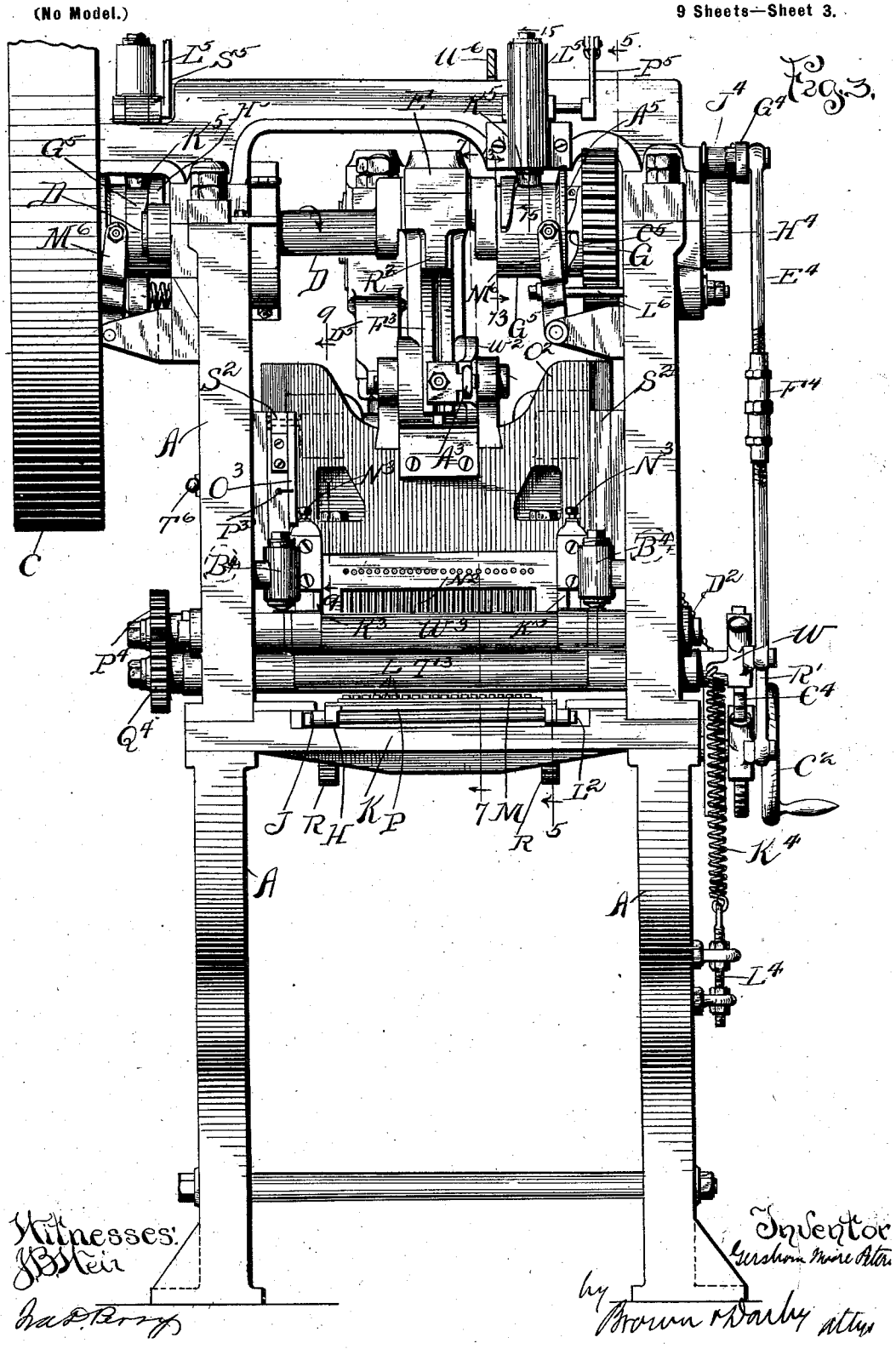

Witnesses:
J. B. Stein
Chas. D. Berry

Inventor
Gershom Moore Peters
by Brown & Darby Attys

THE NORRIS PETERS CO., PHOTO-LITHO., WASHINGTON, D. C.

No. 702,151. Patented June 10, 1902.

G. M. PETERS.

METALLIC CARTRIDGE LOADING MACHINE.

(Application filed Aug. 9, 1899.)

(No Model.) 9 Sheets—Sheet 4.

Fig. 4.

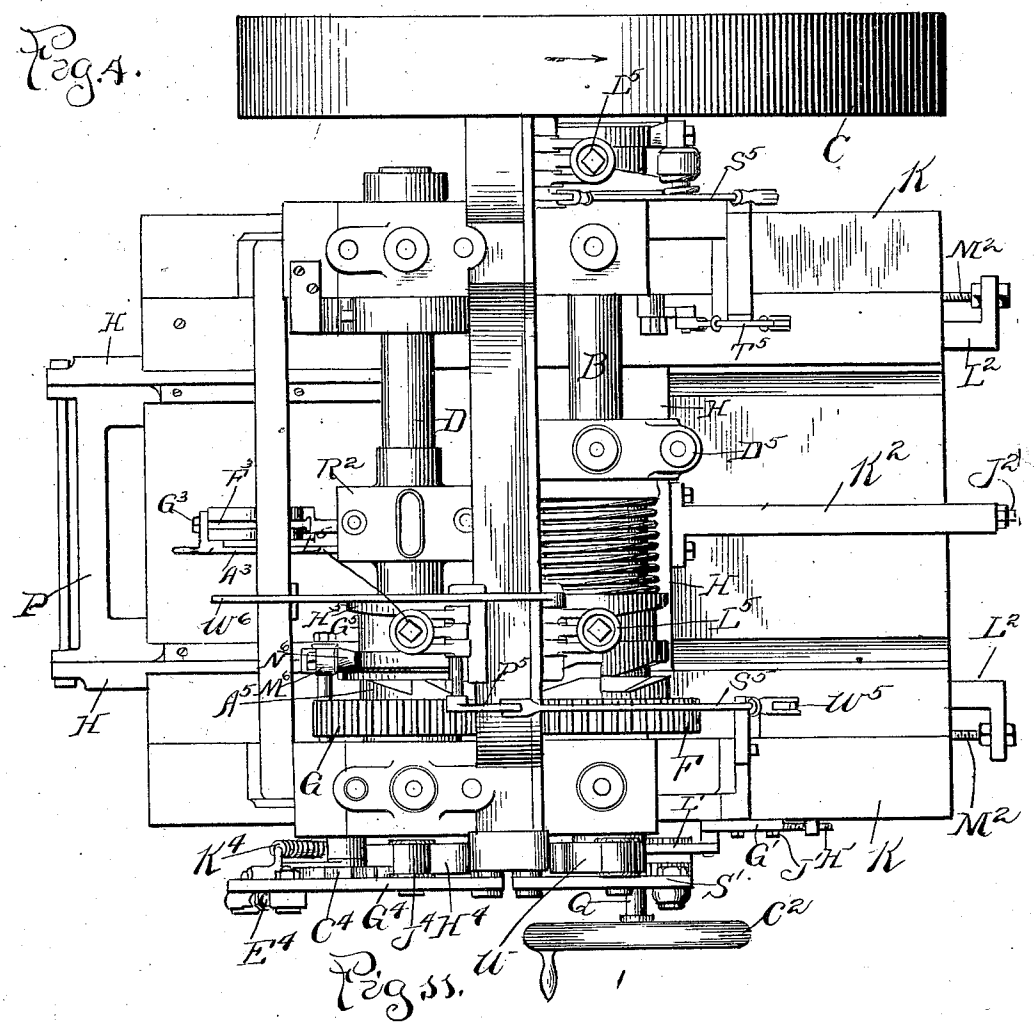

Fig. 11.

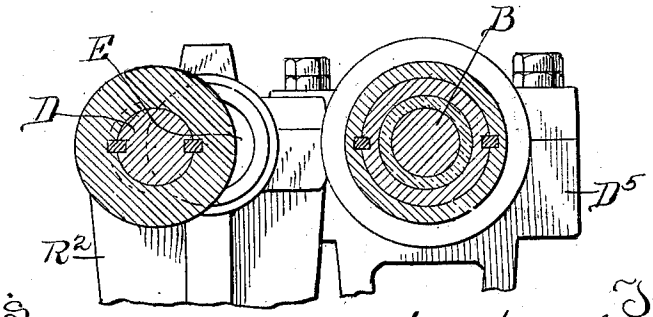

Witnesses
J. B. Weir
Ira P. Perry

Inventor
Gersham Moore Peters
by Brown & Darby
Attys.

THE NORRIS PETERS CO., PHOTO-LITHO., WASHINGTON, D. C.

No. 702,151. Patented June 10, 1902.

G. M. PETERS.

METALLIC CARTRIDGE LOADING MACHINE.

(Application filed Aug. 9, 1899.)

(No Model.) 9 Sheets—Sheet 5.

Fig. 5.

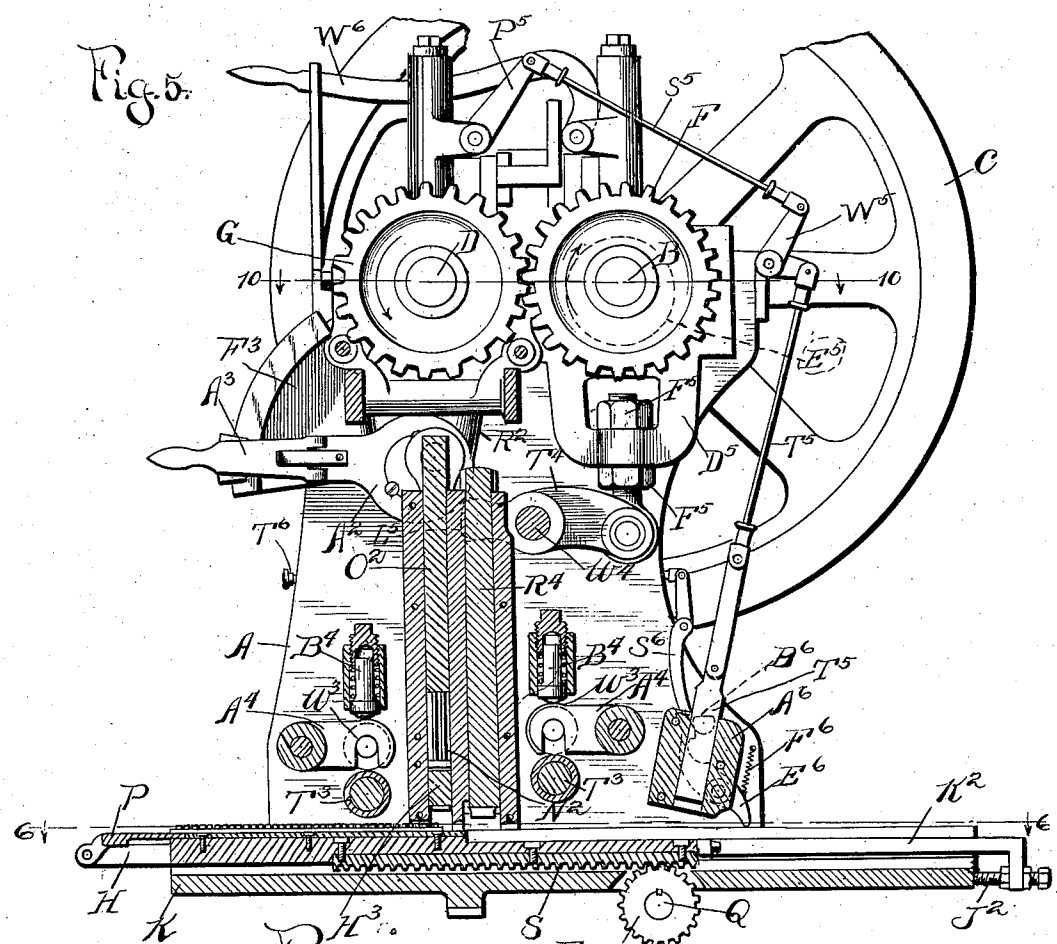

Fig. 10.

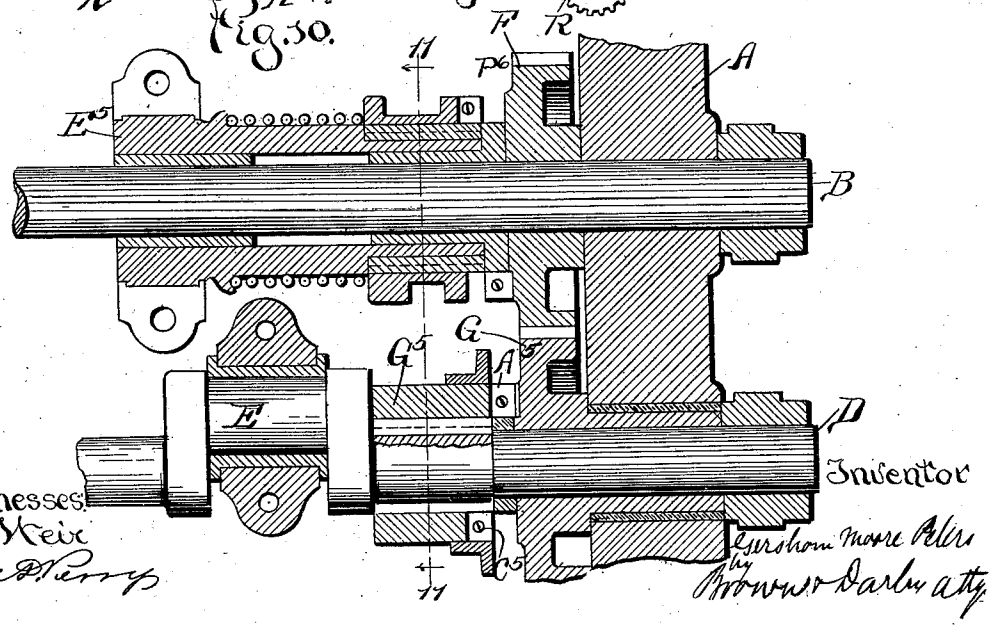

Witnesses:
J. B. Weir
Ira D. Perry

Inventor
Gershom Moore Peters
by Brown & Darby atty.

THE NORRIS PETERS CO., PHOTO-LITHO., WASHINGTON, D. C.

No. 702,151. Patented June 10, 1902.

G. M. PETERS.

METALLIC CARTRIDGE LOADING MACHINE.

(Application filed Aug. 9, 1899.)

(No Model.) 9 Sheets—Sheet 6

Fig. 6.

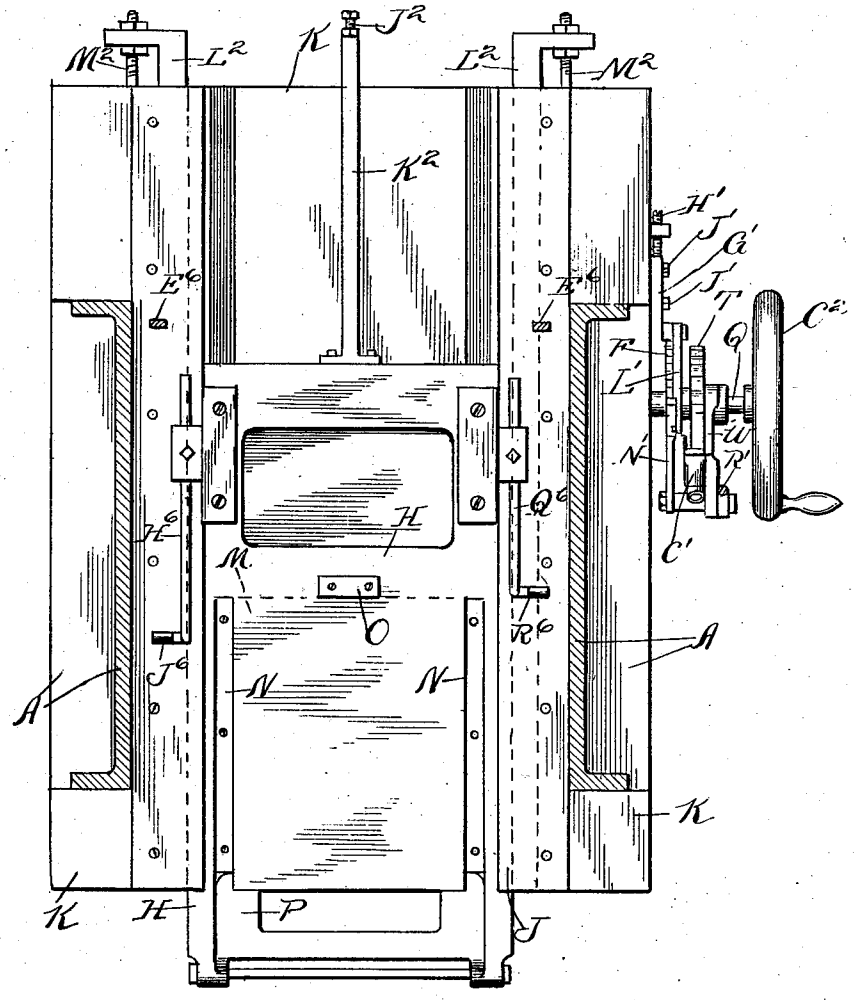

Witnesses:
H. B. Keir
Chas. F. Perry

Inventor
Gershom Moore Peters
by Brown and Darby
Attys

THE NORRIS PETERS CO., PHOTO-LITHO., WASHINGTON, D. C.

No. 702,151. Patented June 10, 1902.

G. M. PETERS.

METALLIC CARTRIDGE LOADING MACHINE.

(Application filed Aug. 9, 1899.)

(No Model.) 9 Sheets—Sheet 7.

Fig. 8.

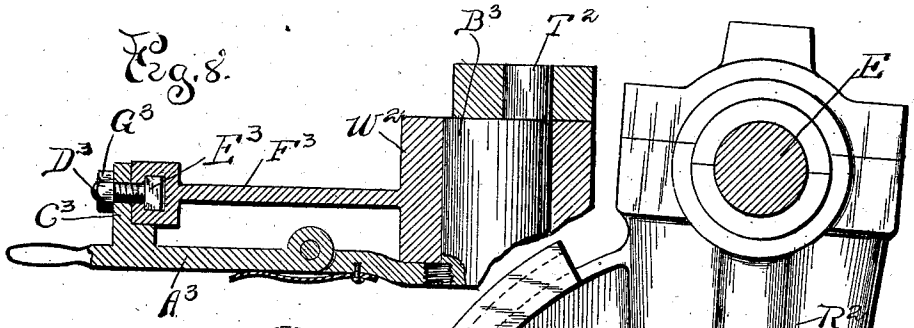

Fig. 7.

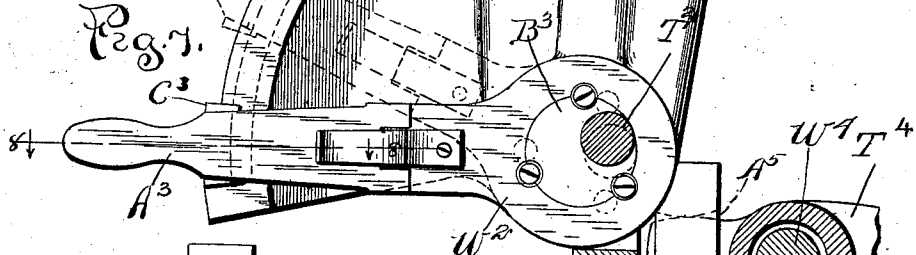

Fig. 9.

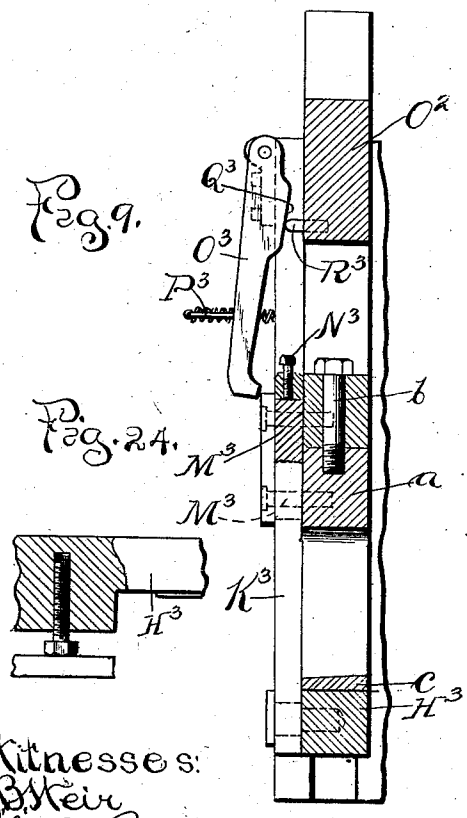

Fig. 24.

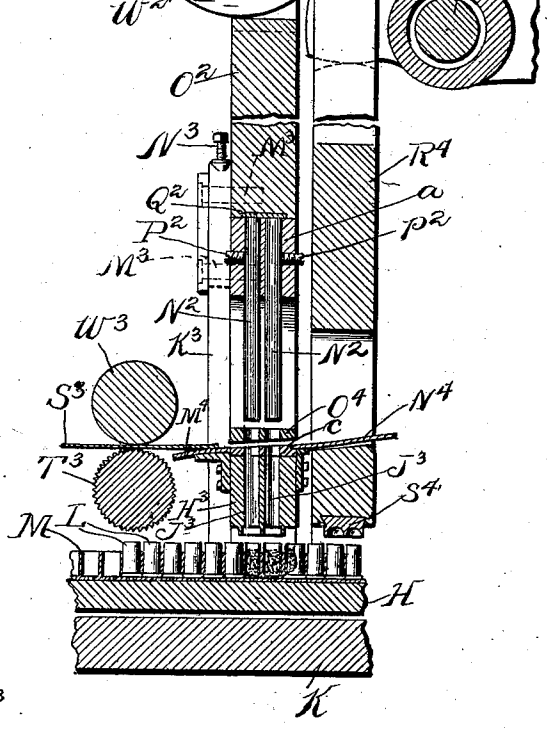

Witnesses:
H. B. Weir
Wm. D. Perry

Inventor
Gershom Moore Peters
by Brown and Darby
Attys.

THE NORRIS PETERS CO., PHOTO-LITHO., WASHINGTON, D. C.

No. 702,151. Patented June 10, 1902.

G. M. PETERS.

METALLIC CARTRIDGE LOADING MACHINE.

(Application filed Aug. 9, 1899.)

(No Model.) 9 Sheets—Sheet 8.

Fig. 13.

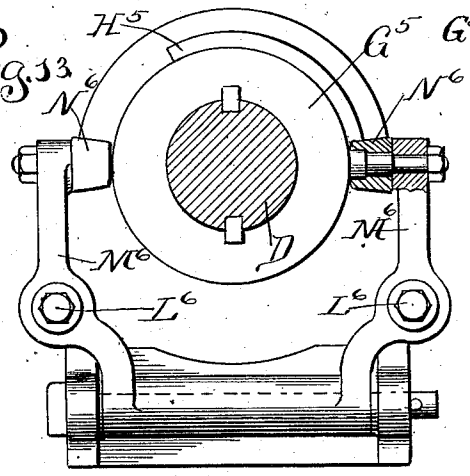

Fig. 14.

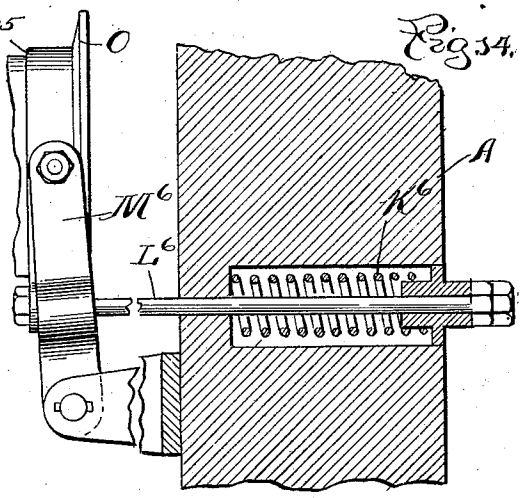

Fig. 15.

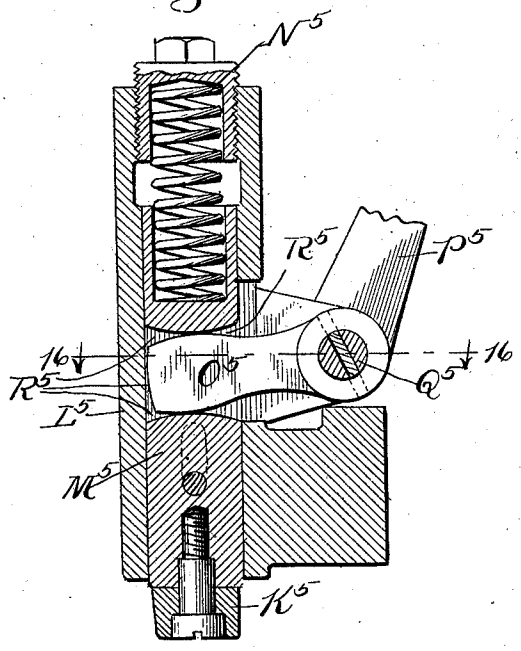

Fig. 16.

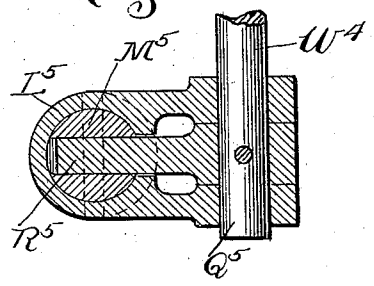

Fig. 17.

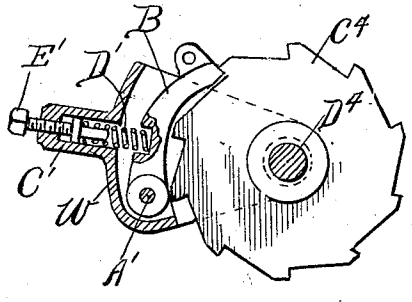

Witnesses
J. B. Weir
Ba. D. Perry

Inventor
Gershom Moore Peters
by Brown and Darby
Attys

THE NORRIS PETERS CO., PHOTO-LITHO., WASHINGTON, D. C.

No. 702,151. Patented June 10, 1902.

G. M. PETERS.

METALLIC CARTRIDGE LOADING MACHINE.

(Application filed Aug. 9, 1899.)

(No Model.) 9 Sheets—Sheet 9.

Fig. 18.

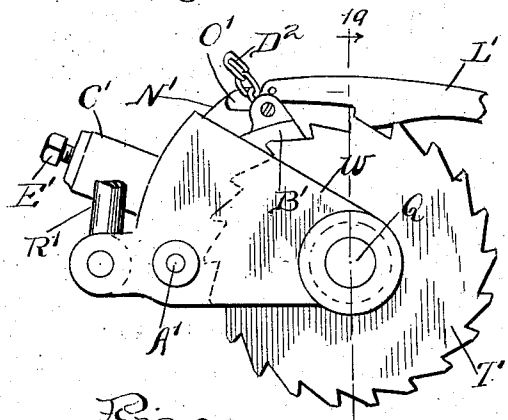

Fig. 19.

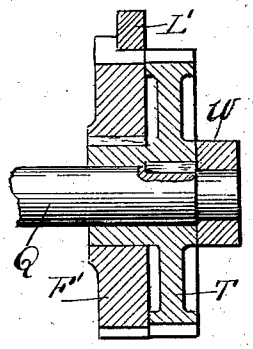

Fig. 20.

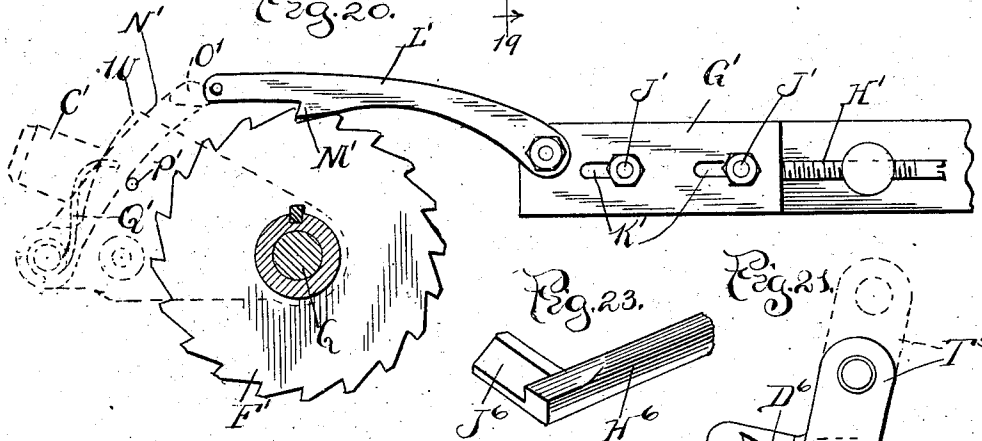

Fig. 23.

Fig. 21.

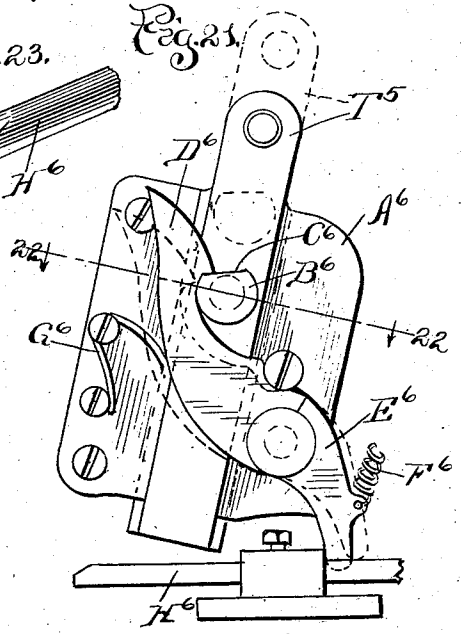

Fig. 22.

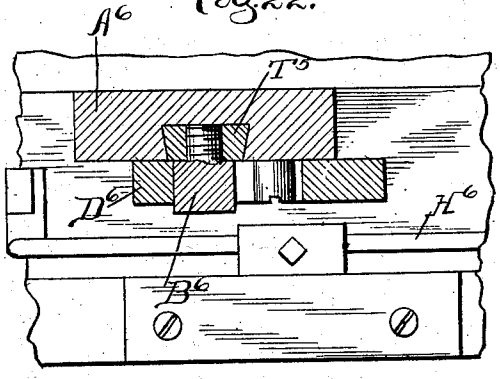

Witnesses:
J. B. Keir
Ira D. Perry

Inventor
Gershom Moore Peters
by Brown and Darby
Attys

THE NORRIS PETERS CO., PHOTO-LITHO., WASHINGTON, D. C.

UNITED STATES PATENT OFFICE.

GERSHOM MOORE PETERS, OF CINCINNATI, OHIO.

METALLIC-CARTRIDGE-LOADING MACHINE.

SPECIFICATION forming part of Letters Patent No. 702,151, dated June 10, 1902.

Application filed August 9, 1899. Serial No. 726,637. (No model.)

To all whom it may concern:

Be it known that I, GERSHOM MOORE PETERS, a citizen of the United States, residing at Cincinnati, in the county of Hamilton and State of Ohio, have invented a new and useful Improvement in Metallic-Cartridge-Loading Machines, of which the following is a specification.

This invention relates to metallic-cartridge-loading machines, and has to do more particularly with what are termed "blank cartridges" and "shot cartridges," which require wads and the crimping of the ends.

The object of the invention is to provide a machine which is simple in construction and efficient in operation for cutting and inserting wads and for crimping the ends of the shells.

The invention consists, substantially, in the construction, combination, location, and arrangement of parts, all as will be more fully hereinafter set forth, as shown in the accompanying drawings, and finally pointed out in the appended claims.

Referring to the accompanying drawings and to the various views and reference-signs appearing thereon, Figure 1 is a view in side elevation of a machine constructed in accordance with the principles of the invention, said view being taken from the right-hand side of the machine. Fig. 2 is a similar view, the lower part of the frame being broken away, taken from the opposite side of the machine. Fig. 3 is a front or end elevation of the machine. Fig. 4 is a plan view of the same. Fig. 5 is a broken view in section on the line 5 5 of Fig. 3 looking in the direction of the arrows. Fig. 6 is a horizontal sectional view on the line 6 6, Fig. 5 looking in the direction of the arrows. Fig. 7 is a broken sectional detail view on the line 7 7, Fig. 3, looking in the direction of the arrows. Fig. 8 is a broken detail view in section on the line 8 8 of Fig. 7 looking in the direction of the arrows. Fig. 9 is a detail view in section on the line 9 9 of Fig. 3 looking in the direction of the arrows. Fig. 10 is a broken detail view in section on the line 10 10, Fig. 5. Fig. 11 is a detail view in section on the line 11 11, Fig. 10, looking in the direction of the arrows. Fig. 12 is a broken detail view in perspective, showing the clutch-collars separated, so as to show the construction and arrangement thereof. Fig. 13 is a detail view in section on the line 13 13, Fig. 3, looking in the direction of the arrows. Fig. 14 is a broken detail view, in side elevation, of the construction shown in Fig. 13, a portion of the housing being in section to show the construction and arrangement of the spring-actuated tightener-rod. Fig. 15 is a broken detail view in section on the line 15 15, Fig. 3, looking in the direction of the arrows. Fig. 16 is a similar view on the line 16 16, Fig. 15, looking in the direction of the arrows. Fig. 17 is a detail view, parts in section, of the wad-feeding ratchet and its operating-pawl. Fig. 18 is a broken detail view, in side elevation, of the carriage-feed ratchet and lock. Fig. 19 is a broken detail view in section of the same on the line 19 19, Fig. 18. Fig. 20 is a broken detail view in side elevation, showing the construction and arrangement of locking device for the carriage-feed ratchet. Fig. 21 is a detail view of the clutch-tripping mechanism, a displaced position of the parts being indicated in dotted lines. Fig. 22 is a broken detail view in section on the line 22 22, Fig. 21, looking in the direction of the arrows. Fig. 23 is a broken detail view in perspective of the adjustable stop or cam-shoe for regulating the point at which the clutch mechanisms are thrown out of action. Fig. 24 is a broken detail view showing the manner of supporting the alining die-block upon the bed-plate when said block is lowered upon the shells.

The same part is designated by the same reference-sign wherever it occurs throughout the several views.

In the drawings reference-sign A designates the frame of the machine, which may be of suitable material, construction, and arrangement for supporting and forming a housing for the various parts and mechanisms of the machine. Suitably journaled in bearings formed in the framework of the machine is a main or drive shaft B, adapted to receive rotation from any suitable source, as through drive-pulley C, and to transmit the same to the various working parts, as will be more fully hereinafter explained. Suitably geared to or driven from the main drive-shaft B is a counter-shaft D, suitably journaled and

mounted in the framework. The said shaft D will be hereinafter designated as the crank-shaft, inasmuch as it is provided with a crank E. Rotation may be imparted to the crank-shaft D from main drive-shaft B in any suitable manner, as by means of the intermeshing gears F G.

The construction, arrangement, and mode of operation of the feeding mechanism for presenting the cartridge-shells to the action of the wad cutting, placing, and crimping devices will be first described.

The machine forming the subject-matter of the present application is designed particularly for use in cutting and inserting the wads in cartridge-shells and then, if desired—as, for instance, in the manufacture of blank cartridges—crimping the ends of the shells. In the operation of the machine the shells in which the charges of powder have been placed are presented first to the action of the wad cutting and placing devices, whereby a wad is introduced into the shell above the powder, and then to the crimping mechanism, whereby the end of the shell is crimped. A simple and convenient arrangement of feeding mechanism for properly presenting the shells, with charges of powder therein, to the wad-inserting devices is shown, wherein is employed a feed-carriage H, mounted to rest upon a bed-plate K and to slide in suitable guides J, formed thereon. The cartridge-shells (indicated at L) are placed in a suitable plate or receptacle M, which plate or receptacle is placed upon the carriage H, side guides N and the end stop O (see Fig. 6) serving to support and hold the cartridge-shell plate M and to prevent lateral movement thereof. At the end of the carriage is hinged a gate P, which when rocked or swung out of the way will permit the plate filled with the shells to be introduced or slid into proper place upon the carriage until the front edge of such plate abuts against the stop O, as indicated in dotted lines in Fig. 6. Thereupon the hinged end gate P is rocked back into position to engage behind the rear edge of such plate, thus holding the plate in position. The feed-carriage may now be fed forward, so as to present the shells in suitable and proper alinement with the wad-inserting plungers. Many specifically-different arrangements and constructions of feeding devices for the carriage may be devised for accomplishing the desired result. While, therefore, a specific construction is shown and will now be described, it is to be understood that the invention is not limited or restricted thereto. In the particular form shown a shaft Q is suitably mounted in the framework of the machine and carries a gear-wheel R, arranged to engage a rack S, mounted upon or carried by the feed-carriage H. Thus when the shaft Q is rotated a feed of the carriage in one direction or the other is effected, according to the direction in which said shaft Q rotates. Rotation may be imparted to the feed-carriage-operating shaft Q in any suitable manner. In order, however, that the apparatus may properly perform the work required, it is desirable that a step-by-step feed be imparted to the said carriage. To accomplish this, a ratchet disk or wheel T is suitably mounted upon and splined or otherwise secured to rotate with shaft Q. Pivotally mounted upon or concentric with shaft Q is an arm W, upon which is pivoted, as at A′, a pawl B′, said pawl being arranged to engage in the peripheral teeth of ratchet-wheel T. (See Fig. 18.) Carried by arm W is a barrel having a chamber therein adapted to receive a spring arranged to bear upon pawl B′ and the tension of which is constantly exerted to press said pawl into engaging contact or position with respect to the ratchet-teeth of disk or wheel T.

The construction and relative arrangement of arm W, barrel C′, pawl B′, and spring as above described are identical with similar parts employed in connection with the feed of the wad-strip, hereinafter to be described more fully and as shown in Fig. 17, wherein the spring is designated by reference-sign D′. Therefore the same reference-signs have been employed to designate the same parts. The tension of spring D′ may be suitably adjusted by set screw or bolt E′.

From the foregoing description it will be seen that when arm W is rocked or swung about its pivotal support upon or concentric with shaft Q in one direction the toe or end of pawl B′ will engage the teeth of ratchet-gear T and effect a rotation of said ratchet, and consequently of shaft Q, thereby effecting a feed of the carriage, and when said arm W is rocked in the opposite direction the pawl B′ will ride idly over the teeth of ratchet T, the spring D′ serving to maintain the pawl constantly pressed into peripheral engagement with the teeth of ratchet-gear T.

It is a matter of material importance to provide means whereby when the carriage has been presented in position to secure alinement between the wad-inserting plungers and the cartridge shells or cases that the carriage be arrested and locked in that position, so that the position of the cartridge shells or cases relative to their alinement with the wad-inserting plungers may not be disturbed by the momentum of operation of the machine or by any jarring due to the operating parts. To accomplish this desirable end and to provide means whereby the carriage-feed mechanism is locked as soon as the pawl B′ has completed its movement to effect a forward feed of the carriage and begins to return to position to effect the next feed step of the operation, I provide a second ratchet-wheel F′, having the ratchet-teeth thereon faced in the opposite direction with respect to the teeth on ratchet T. A simple and convenient arrangement is shown whereby the ratchet-wheel F′ is suitably mounted upon and splined to the hub of ratchet-wheel T, (see Fig. 19,) thus securing coincidence of rotation of both of the ratchet-

gears T F'. Upon a convenient and adjacent part of the frame or bed-plate is mounted an adjustable block or plate G', the desired adjustment thereof being secured through adjusting-screw H', and when adjusted in the desired position said block or plate is securely held by means of the bolts J' passing through the elongated slots K' in said block or plate G'. Pivotally mounted upon adjustable plate or block G' is a lever L', having a tooth M' so shaped and arranged as to engage the teeth of ratchet F' and lock the same against rotation in one direction, but permitting the rotation of said ratchet-gear in the direction necessary to cause shaft Q to effect a feed of the carriage to the wadding devices. Pivotally mounted upon arm W is a lever N', having its free end O' arranged to engage the free end of ratchet-lever L'. The arm N' is arranged to rest against a pin P', (see Fig. 20,) and a spring Q' may serve to yieldingly press said arm against its pin support or rest P'. The arrangement and operation of these parts will be clearly understood from the foregoing description, in connection with the drawings, and is as follows: As soon as arm W begins its swing in a direction to effect a feed of the carriage to the wadding devices the free end O' of arm N' engages the end of lever L' and causes said lever L' to be rocked so as to clear the tooth M' thereon from engaging relation with respect to the teeth of ratchet F'. The arm L' is thus held elevated out of locking position until arm W completes its travel. The return movement of arm W, carrying with it the arm N', releases the lock-lever L', thus enabling the tooth M' thereon to engage the teeth of ratchet F', thereby locking the feed mechanism against any further movement.

The ratchet-arm W may be rocked in many different ways. A simple construction for effecting this result is shown, wherein a pitman R' is pivotally connected at one end to said arm W and at the other end to the free end of a lever S', pivotally mounted, as at T', (see Fig. 1,) upon a convenient part of the framework of the machine, said lever S' arranged to be engaged and rocked by a cam W' on main drive-shaft B. If desired, and in order to reduce friction, an antifriction-roller A^2, carried by lever S', may receive the contact of cam W'. The pitman R' operates against the tension of a spring B^2, the tension of which may be suitably adjusted in any convenient manner, said spring normally operating to return or maintain arm W in its initial position.

The operation of the construction above described is as follows: Upon each rotation of main drive-shaft B the cam W' thereon effects a rocking movement of lever S', thereby through pitman R' rocking arm W about shaft Q and against the action of spring B^2. The initial rocking movement of arm W causes the end O' of arm N' to engage the end of lock-lever L', thereby disengaging the tooth M' from the teeth of ratchet F', and thereafter through the engagement of pawl B' with the teeth of ratchet T a rotative movement is imparted to shaft Q through a definite predetermined distance, thereby advancing the feed-carriage, with its load of cartridge-shells, into position for the wad-inserting plungers to perform their work. After the cam W' has reached the limit of its projection—that is, when the arm W has completed its throw in feeding direction and begins its return movement—the lock L' is again permitted to drop into engaging relation with respect to the teeth of ratchet F', thereby locking the feed-carriage against further advancement, and hence preventing displacement of the alinement of the cartridge-shells with respect to the wad-punches. In the form shown the cartridge-shells are arranged in their supporting plate or holder in rows extending transversely across the machine, and a construction is shown (see Fig. 7) employing two sets of wad cutting and inserting punches. Therefore each actuation of the ratchet-feed mechanism for the carriage advances such carriage through a distance sufficient to present two fresh rows of the cartridge-shells into alinement with the wad-punches. It is obvious, however, that only one or any number of shells may be arranged in each row and one or any number of such rows may be simultaneously presented to correspondingly-arranged wad-punches or sets of punches. The arrangement shown has been found efficient for the desired purposes. After the carriage has been advanced by its step-by-step feeding mechanism, as above explained, to the limit of its travel—that is, until all the cartridge-shells have been successively presented into position to receive their wads and when desired for the ends thereof to be crimped, as will be more fully hereinafter explained—the carriage may be returned to its initial position. This return may be effected in any suitable manner. A simple and convenient arrangement is shown wherein a hand-wheel C^2 is mounted upon the end of shaft Q and by the operation of which the feed-carriage is returned to its initial position. In order to permit the hand-wheel C^2 to perform its function of returning the carriage, it is necessary to raise the pawl B' and lock-lever L' out of engagement with the teeth of their respective ratchet-wheels. To effect this result, said pawl and lever may be connected in any suitable manner, as through chains, cords, or other suitable devices, (indicated at D^2,) to a pivoted bracket E^2, suitably mounted upon the framework of the machine. (See Fig. 1.) A weighted arm F^2 is pivotally mounted upon said bracket and when rocked or swung in one direction or the other is arranged to rest upon the studs or pins G^2 H^2, carried thereby. When the weighted lever F^2 is rocked into position to rest upon stud or pin G^2, the bracket E^2 is rocked or swung in a direction

to cause the connection D^2 to become slack, and hence permitting operative engagement of pawl B′ and lever L′ with their respective ratchet-gears. When, however, the weighted lever F^2 is rocked in the opposite direction and into position to bear against its stop-pin or support H^2, the bracket E^2 is rocked in the opposite direction to cause connection D^2 to be drawn taut, thus raising pawl B′ and lever L′ out of operative engagement with their respective ratchets, and hence enabling the hand-wheel C^2 to be actuated to return the carriage to its initial position for the cartridge-shells in which wads have been inserted to be removed and replaced by a fresh plate or holder filled with cartridge-shells ready to receive the wads. If desired, and in order to provide an adjustable stop for the feed-carriage to adjustably limit its return movement, a set bolt or screw J^2 may be mounted in the end of said carriage or in the end of an arm K^2, secured thereto, said set screw or bolt being arranged to abut against the end of the bed-plate K. If desired, and in order to take up any wear in the guides in which the feed-carriage operates in the bed-plate, a tapering gib L^2 may be arranged to form the wall of each of said guides, and by suitably adjusting said gibs longitudinally, as through set screws or bolts M^2, such wear may be efficiently taken up in a manner readily understood.

The next feature of the invention which will now be described is the manner of mounting and operating the wad cutting and inserting punches. The punches N, Fig. 7, comprising steel rods, are suitably mounted in a block *a* and held by set-screws P^2, which block in turn is securely fastened to the cross-head or plunger O^2 by means of bolts *b*, Fig. 9, there being openings in plunger O^2 for inserting said bolts. If desired, the upper ends of the wad-punches may abut against a steel strap Q^2, which receives the impact of such punches during the operation of the machine. From the above description it will be seen that the punches N^2 may be readily removed or replaced when necessary or desired. It is obvious that only one or any number of punches may be employed, as may be desired. In practice and in the form shown two sets of punches are employed, the members of each set being arranged in a row and corresponding in number to the number of shells contained in a row in the shell plate or holder. The plunger O^2, which carries the wad-punches, is suitably connected through a pitman R^2 to the crank E of shaft D, whereby said plunger is reciprocated in suitable guides (indicated at S^2, Fig. 3) formed or arranged in the framework of the machine.

It is obvious that a machine constructed in accordance with the principles of the invention may be used to insert wads in cartridge-shells of different lengths, and therefore in order to adapt the machine for shells of different lengths it is desirable to provide means whereby the length of the pitman or the distance through which the plunger descends may be adjustable. In order to effect this adjustment in a simple, expeditious, and efficient manner, the following construction may be employed: The plunger O^2 instead of being connected directly to the pitman R^2 is pivotally connected upon an extension T^2, formed on or otherwise carried by pin or block B^3, the latter being revolubly mounted in bearings formed in the end of pitman R^2. Extension T^2, which forms the pivotal connection of plunger O^2, is in eccentric relation to the axis of the pin or block B^3, which forms the pivotal connection of pitman R^2. Therefore it will be seen that by axially rotating or adjusting pin or block B^3 in its bearing in the end of pitman R^2 the relation of the axes of the connections of the plunger O^2 and that of the pitman R^2 may be varied, thus varying and regulating, in effect, the length of the plunger, and hence the distance through which the wad-punches descend, without varying the stroke of the crank E and pitman R^2. The rotary or axial adjustment of pin or block B^3 in the end of pitman R^2 may be effected in many different ways. For instance and in the form shown an adjusting or operating handle A^3 may be mounted on or otherwise secured to or formed with pin or block B^3, whereby by suitably actuating said lever said pin or block B^3 may be axially adjusted or rotated to secure the desired variation. It is obvious that when the handle A^3 is actuated so as to bring the axis of extension T^2 in the same horizontal plane with the axis of pin or block B^3 then plunger O^2 will be reciprocated its medial distance. If, however, the handle A^3 is operated so as to cause extension T^2 to be moved below the axis of pin B^3, then on its downward stroke the plunger O^2 will carry the punches N^2 closer to the feed-carriage. This is the arrangement when comparatively short cartridge-shells are being operated upon, and by varying the position of extension T^2 below the axial line of pin or block B^3 then the point to which the ends of the punches are projected may be regulated. Similarly when the operating-lever A^3 is rocked in the opposite direction, so as to carry the extension T^2 above the axial line of pin or block B^3, then the ends of the punches will not approach so near the feed-carriage. This is the case where longer cartridge-shells are being operated upon or where larger quantities of powder-charges are employed. Thus by suitably manipulating the handle A^3 the distance through which the plungers descend may be varied and regulated to accommodate different lengths of cartridge-shells or different quantities of powder-charges contained therein or different thicknesses of wads or other varying conditions encountered in the practical operation of the machine. In order to hold lever A^3 in the desired adjusted position, said lever may be provided with a lug C^3, through which is tapped a screw D^3, the

stem of which is arranged to operate through a slotted casting or arm F^3, formed with or otherwise mounted on or secured to the pitman R^2. A set-nut G^3 serves to clamp lug C^3 and arm or casting F^3 against the head E^3 of bolt D^3, thus securing the handle in adjusted position. If desired, the handle A^3 may be made in sections pivoted together, as clearly indicated in Fig. 8, whereby the lug or flange C^3, formed thereon, may be brought into suitable position to receive the end of bolt D^3 or to permit said bolt to enter the slot in arm or casting F^3.

Associated and coöperating with the punches N^2 is a die and alining-block H^3. Through this block are formed passages corresponding in number and arrangement to the punches and to the cartridge-shells and through which the punches operate. At their lower ends these passages J^3 are somewhat enlarged to snugly receive therein the ends of the cartridge-shells, whereby true and accurate alinement of the punches and the shells is secured. It is desirable that the block H^3 be capable of movement independently of the plunger O^2 in order that said block may be adjusted down into position to receive the ends of the shells before the punches begin their advancing movement sufficiently to enter the upper ends of the channels or passages J^3 in said block. To secure this result, said block is carried by links K^3, said links being slotted. Through said slots project screws or bolts M^3, carried by plunger O^2, said links being supported upon said screws or bolts. Thus when the plunger O^2 begins its downward movement the block H^3 will descend therewith until the lower ends of passages or channels J^3 therein receive the ends of the shells. Thereafter the further downward movement of the block is arrested, while the punches continue their descent to effect their duty, the bolts M^3 operating in the slots in the links K^3, permitting such continued descent, and the block remains in its lowered position until the plunger is moved upwardly a distance sufficient for the bolts M^3 to traverse the length of the slots in which they operate, when the block will take up the movement of the plunger and the two will thereafter move together, thus elevating or raising the block from the shells, and hence permitting the next step of feed of the carriage to be effected to present a fresh shell or row or rows of shells into position to be acted upon upon the next downward reciprocation of the plunger. If desired and in order to adjust the position of the block H^3 relative to the ends of the punches N^2, set-screws N^3 may be mounted in the plunger O^2 and arranged as stops to limit or vary the movement of the block H^3 or its supporting-links relative to the plunger. In order that the block H^3 when once it has been lowered into position upon the open ends of the shells may be securely held thereon against accidental displacement through vibration of the machine or other cause, a lever, or latch O^3 may be suitably and pivotally mounted upon a fixed part of the framework in position for the end thereof to engage above the ends of the links K^3, by which the block H^3 is supported when said head or block has been lowered into position to receive in the lower ends thereof the open ends of the shells. A spring P^3 may be employed and arranged to normally tend to press or carry the end of the latch O^3 into position to engage above the links K^3. In order that this lock for the block H^3 may be released at the proper time in the operation of the machine, the latch O^3 may be provided with a cam-surface, as indicated at Q^3, Fig. 9, with which engages a pin R^3, carried by the reciprocating plunger O^2. Thus it will be seen that when the plunger O^2 is moved upwardly or away from the shell-carrier the pin R^3 will engage the cam-surface Q^3 and rock lever O^3 in a direction to free the end thereof from engagement above the support of the block, thereby permitting the block to be raised by the further movement upwardly or away from the feed-carriage of the plunger O^2, as above described.

From the foregoing description it will be seen that the block H^3 is lowered upon the ends of the cartridge-shells, the open ends of which are received in the ends of the channels or passages J^3 in the block. This operation takes place before the punches enter the upper ends of said passages or channels. It will also be seen that by this arrangement the shells are efficiently maintained in true and proper alinement with the punches during the operation of the latter and that the block is locked in its operative position and so maintained until the punches have completed their work and are withdrawn. When this point in the operation of the machine is reached, the block is released and raised off the ends of the shells to permit a further feed of the carriage. The block H^3 is further provided with a removable steel die-plate *c* to receive the punches N^2 and to afford a sharp cutting edge to enable said punches to easily and cleanly cut the wads. This die-plate is slightly beveled in order to give a shearing cut, and so relieve excessive strain. The die-plate does not rest on the block H^3 during the cutting operation, but is supported at its ends beyond said block and is sufficiently thick or strong to prevent springing. The wad material may be presented to the action of the punches in any suitable or convenient manner. A construction is shown wherein a strip or sheet S^3 of wad material is presented into the path of the punches N^2, whereby each punch as it descends cuts out of such strip or sheet a wad, and carrying the wad in advance of it forces the same through its corresponding passage J^3 in the block H^3 and inserts the same into the open end of the shell. Thus the punches N^2 not only effect the cut-

ting of the wads from the strip or sheet of wad material, but also insert them into the cartridge-shells.

The wad strip or sheet S^3 may be presented and fed through the machine in any suitable manner. In the form shown, to which, however, the invention is not limited, feed-rolls T^3 W^3 are employed which effect the feeding of such strip or sheet. The feed-roll W^3 is arranged over the feed-roll T^3 and is supported in a link A^4, pivotally mounted upon a convenient part of the machine-frame. Arranged to bear upon the feed-roll W^3 is a spring-pressed block B^4, whereby said feed-roll W^3 is yieldingly and efficiently pressed into engaging contact and coöperating relation with respect to its companion roll T^3, and, if desired, one or the other of said feed-rolls T^3 W^3 may be suitably serrated or grooved, thus securing an efficient gripping action upon the strip or sheet of wad material to effect the proper feed thereof. In practice it is preferred to employ two sets of feed-rolls T^3 W^3, as clearly shown in Fig. 5, one set arranged on one side of the punches N^2 and the other on the opposite side of said punches, the first set of rolls to feed properly and the second set to receive and draw forward the wad-sheet after having been punched. A step-by-step rotation is imparted to feed-roll T^3, and this may be effected in any suitable or convenient manner. In the form shown (see Figs. 1, 3, and 17,) a ratchet C^4 is mounted on the shaft D^4, which carries feed-roll T^3, and said ratchet is arranged to be engaged and operated by a pawl-and-ratchet mechanism identical in all respects with that shown and above described with reference to the operation of the feed-ratchet mechanism of the carriage H—that is to say, an arm W is sleeved or pivoted concentric with the axis of the shaft D^4 and carries pivotally mounted thereon a pawl B′, arranged to engage the teeth of ratchet C^4. A spring D′, carried in a barrel C′ and adjusted by a screw E′, serves to normally press the pawl B′ into engagement with the ratchet-teeth of wheel or disk C^4. To arm or casting W is connected a rod or pitman E^4, which may be suitably adjusted as to length, as at F^4, in a manner similar to that in which the length of rod or pitman R′ may be adjusted and which rod or pitman E^4 is connected to the free end of a lever G^4, pivotally mounted upon the frame of the machine and arranged to be engaged and acted upon by a cam H^4, mounted upon shaft D. If desired and in order to reduce friction, the lever G^4 may carry an antifriction-roller J^4, which receives the contact of cam H^4. A spring K^4 may be employed to return or normally maintain casting or arm W in its retracted position. The tension of spring K^4 may be adjusted in any suitable manner, as by screw-bolt L^4, in a manner similar to the adjustment of the tension of spring B^3, above described. By this construction it will be seen that upon each rotation of shaft D a feed of the wad sheet or strip is effected through a definite predetermined distance. The rolls T^3 on opposite sides of the plunger may be suitably geared to rotate in unison in any desired or convenient manner—as, for instance, through gears P^4 Q^4. (See Fig. 2.) After leaving the set of feed-rolls T^3 W^3 on the front side of the plungers the strip S^3 is fed through a suitable slot or opening formed in the block H^3 and in a path which is transverse to the passage J^3 therein, and, if desired, suitable tables M^4 N^4, which, if desired, may be mounted on block H^3, may be employed, both at the front and at the rear of the plungers, to suitably support and form a rest for the sheet or strip of wad material, and in practice it is preferred to arrange the path of travel of the sheet or strip of wad material somewhat inclined relative to the line of reciprocation of the punches, as most clearly shown in Fig. 7. This arrangement has been found to offer the least friction or opposition to the operation of the machine. The portion O^4 of the aligning-block, between which and the main body thereof the sheet or strip of wad material passes, serves as a stripper to strip the sheet of wad material from the punches when the latter are elevated or withdrawn after having been advanced and also serves to guide and support the punches.

It may sometimes be desired—as, for instance, in the case of blank cartridges—to crimp the open ends of the shells after the wads have been inserted therein over the charge of powder. In order to accomplish this result, a reciprocatory crimping-plunger R^4 is mounted to slide or reciprocate in suitable guides formed in the framework and adjacent to the plunger O^2. This plunger R^4 carries a crimping die or bar S^4 in the lower end thereof and arranged when said plunger R^4 is reciprocated to engage and crimp the open ends of the shells after the carrier has advanced the shells from the point at which the punches N^2 operate. The crimper-bar S^4 may be arranged to operate upon the same number of shells which received wads at the same application of the wad-punches. Thus in the form shown, to which, however, the invention is not limited, the crimper-bar S^4 is arranged to operate on two rows or sets of shells upon each reciprocation of the crimper-plunger R^4. It is desirable that the crimper be operated independently of the wad-cutting plunger. To effect this result, a lever T^4, pivotally mounted intermediate its ends upon a convenient part of the framework, as shown at W^4, is arranged for one end thereof to project into or engage an opening A^5 in the crimper-plunger R^4. The walls of the opening A^5 in the crimper-plunger are preferably curved so as to permit the rocking movement of the arm or lever T^4 therein. (See Fig. 7.) Said crimper-plunger is actuated by a rocking movement imparted to lever T^4. This rocking movement may be accomplished in

any suitable manner—as, for instance, by means of an eccentric-strap D^5 (see Fig. 5) operating upon a cam E^5 (indicated in dotted lines in said Fig. 5) upon shaft B. The connection between lever T^4 and eccentric strap or yoke D^5 may be made adjustable—as, for instance, through the set-nuts F^5—whereby the degree of projection of the crimper-plunger may be adjusted and regulated to accommodate different lengths of shells. The operation of this part of the invention is as follows: Upon each rotation of main or drive shaft B a rocking movement is imparted to lever T^4, which through the engagement of one of the arms thereof with plunger R^4 causes said plunger to be projected and withdrawn to effect the crimping of the open ends of the shells.

It may sometimes be desirable to arrest the operation of either the crimper or the wad-punches, or both, and it is desirable to provide means whereby the operation of the entire machine may be arrested when desired. To accomplish this result, the various operating parts may be controlled by suitable clutches adapted to be thrown into or out of engagement or operative relation. For instance, in the form shown a detachable clutch mechanism is provided for disconnecting the main drive-wheel C from operative connection with shaft B, whereby the entire machine may be thrown out of action. Another detachable clutch mechanism is shown whereby the eccentric-strap D^5 may be thrown out of operative engagement with shaft B, thus permitting said shaft B and the other parts of the machine actuated thereby to continue to operate without effecting an operation of the crimping-die, and still another clutch mechanism is shown for disconnecting the shaft D from rotative engagement with gear G, whereby the main drive-shaft B may continue to rotate without effecting a reciprocation of the plunger O^2. The detachable engagements or unclutching of these parts is desirable particularly to enable the carriage after it has been advanced sufficiently far to enable all the shells carried thereby to be acted upon by the wad-punches and crimper to be returned to its initial position to have the completed shells removed and a fresh quantity supplied thereto, and it is desirable that the plunger O^2 and crimping-die be automatically arrested when the carriage has completed its feeding movement, and it is also desirable to provide means whereby the arrest of the plunger O^2 may occur before the operation of the crimping-die is arrested in order that the crimping-die may complete its work upon those shells which were last acted upon or which occupy the last row or rows in the plate or holder after passing the wad-plungers. Except as noted hereinafter the construction of the various clutches above referred to may be identical. Therefore a description of one will suffice for a description of all. Therefore the clutch which throws out of action shaft D with respect to the operative engagement thereof with its driving-gear G will be now described.

The drive-gear G, through which rotation is imparted to shaft D, is loosely sleeved upon said shaft to revolve thereon, as clearly shown in Fig. 10. Connected to said gear G is a clutch-disk B^5, having clutch ears or teeth A^5 formed thereon, or, if desired, said teeth may be formed directly on gear G. These teeth or lugs are arranged to be engaged by similar teeth or lugs C^5, oppositely arranged and carried by a sleeve G^5, splined to rotate with said shaft D, but capable of longitudinal movement thereon, so as to move the teeth or lugs C^5 carried thereby into or out of engaging relation with respect to the teeth or lugs A^5. In the surface of sleeve G^5 is formed a cam-track H^5, into which may be projected a pin or roller K^5, carried by a plunger M^5, arranged within a housing or casing L^5. A spring N^5, (see Fig. 15,) the tension of which may be adjusted in any suitable manner, is arranged to exert the tension thereof normally in a direction to project plunger M^5 and roller or pin K^5 into the cam-track H^5 of sleeve G^5. The plunger M^5 is held elevated in position to cause roller or pin K^5 to clear the cam-track H^5 by means of an arm O^5 of a bell-crank lever P^5, suitably pivoted, as at Q^5, upon a convenient part of the framework, said arm O^5 engaging in an opening R^5 in said plunger M^5, as clearly shown in Fig. 15. The lever P^5 is connected, through a suitable link S^5 and bell-crank lever W^5, to a pitman T^5. This pitman T^5 is mounted to slide in a casing A^6, suitably supported adjacent to the path of travel of the carriage H, whereby said pitman is guided, and carries a stop B^6, having a flattened surface C^6, (see Fig. 21,) adapted to be engaged by a shoulder formed on the end of a lever D^6. This lever is made in two parts D^6, carrying the shoulder which engages the surface C^6, forming one part and the part E^6 forming the other portion of said lever, these portions being hinged together with a shear-joint, whereby slight rocking movement of the part D^6 upon its pivot-stud and relative to part E^6 is permitted, but whereby when the part E^6 is rocked, as will be more clearly explained hereinafter, it engages part D^6, and the two parts of said lever thereafter rock in unison. A spring F^6 may be employed to normally maintain the part E^6 in engaging relation with respect to the part D^6 of said lever, as clearly shown in Fig. 21. A spring G^6 may be employed to yieldingly press the part D^6 of the trip-lever into position to engage the shoulder C^6 on stop B^6. The free end of part E^6 is arranged to project into the path of a trip-stop H^6, carrying or having formed thereon a projecting lug having a cam or inclined surface J^6. (See Fig. 23.) The stop H^6 is adjustably mounted upon and moves with the carriage H, and when the carriage has arrived at the proper point in its advance move-

ment the free end of part E^6 of the trip-lever engages and rides upon the inclined surface J^6, thereby rocking the trip-lever and effecting a disengagement of the shoulder on the part D^6 thereof from the stop B^6, thereby permitting pitman T^5 to be projected longitudinally. It will be remembered that the tension of spring N^5 (see Fig. 15) is being constantly exerted upon plunger M^5 to cause the roller or pin K^5 carried thereby to be projected into the path of cam-slot H^5 and that said plunger M^5 is held elevated against the tension of said spring through bell-crank lever P^5, link S^5, bell-crank lever W^5, and pitman T^5, the latter being held against the tension of spring N^5 by the engagement of shoulder D^6 with stop C^6. Therefore when said shoulder disengages stop C^6 the spring N^5 is free to cause a projection of plunger M^5, thereby carrying pin or roller K^5 into the path of cam-slot H^5. This engagement effects a movement of sleeve G^5 longitudinally upon shaft D and in a direction to cause the clutch-teeth C^5 to be disengaged from teeth A^5, thereby arresting the actuation of crank-shaft D and also of the wad-plungers. This movement of sleeve G^5 in a direction to cause a disengagement of the teeth C^5 with teeth A^5 of the clutch is opposed by the tension of springs K^6, suitably mounted in recesses in a portion or housing of the frame A and the tension of which may be suitably adjusted in any convenient manner. The tension of these springs is exerted upon rods L^6, (see Fig. 14,) which are connected to a yoke M^6, the arms of which carry pins or rolls N^6, which engage in a groove or flange O^6 of sleeve G^5 and tend to constantly move said sleeve in a direction to effect the engagement of teeth C^5 thereon with the clutch-teeth A^5. Therefore as soon as the pin or stud K^5 is again raised out of engagement with cam slot or track H^5 said spring exerts its tension to effect a coupling of shaft D with its drive-gear G. In identically the same manner the clutch (indicated generally at P^6, Fig. 10,) may be operated to effect a disengagement of eccentric sleeve E^5 from operative connection with shaft B, thereby arresting the action of the crimper. In this instance, however, it is preferred that the stop Q^6, carrying the shoe R^6, which automatically effects the tripping of the latch corresponding to latch D^6, be so set upon the carriage H that it will perform its function at a later time in the operation of the machine from that at which stop H^6 and shoe J^6 perform their functions, thus enabling the carriage to be advanced farther through the machine to enable the last rows of the shells or cases to be acted upon by the crimper, it being understood that the throwing out of action of the plunger-head does not result in an arrest of the carriage-feed mechanism.

It may sometimes be desired to throw the punch-operating head or the crimper-bar out of action by hand or before the feed-carriage arrives at the limit of its feeding movement. To effect this result, a lever S^6 (see Fig. 5) may be pivotally mounted upon a convenient part of the framework in position to engage the end or portion D^6 of the trip-lever, and this auxiliary lever S^6 may be rocked by hand or otherwise in any suitable manner to effect a tripping of lever D^6—as, for instance, by means of a rod T^6, suitably mounted and arranged to project into convenient position to be grasped by the attendant of the machine. (See Fig. 2.) From this description the purpose of the shear-joint connection of the parts D^6 E^6 of the trip-latch will be understood, as the part D^6 may be rocked independently of the part E^6 by hand through the actuation of rod T^6 and lever S^6 when occasion requires. In a similar manner a hand-lever W^6 (see Figs. 1 and 5) may be employed for projecting the clutch pin or roller K^5 into engagement with the cam-slot of sleeve G^5 of the clutch mechanism, and a similar hand-lever A^7 may be connected, through a rod B^7 (see Fig. 1) and a bell-crank connection C^7, to a trip-pitman T^5 to release the trip of some one or another of the clutch mechanisms.

It is obvious that many variations and changes in the details of construction and arrangement would readily suggest themselves to persons skilled in the art and still fall within the spirit and scope of the invention, and many of the features shown and described may be omitted or used either alone or in association with others. The invention therefore is not to be limited or restricted to the exact details of construction and arrangement shown and above set forth; but,

Having now set forth the object and nature of the invention and a form of construction embodying the principles thereof and having described such construction, its function, and mode of operation, what is claimed as new and useful, and sought to be secured by Letters Patent of the United States, is—

1. In a machine of the class described, a plunger, a series of wad cutting and placing punches mounted thereon, means for actuating said plunger, and a die-plate having a series of openings therethrough through which said punches operate, in combination with an alining-block having a coöperating series of openings therethrough and through which said punches operate for guiding the punches to their work, and means for advancing the shells in successive rows to the action of said punches, as and for the purpose set forth.

2. In a machine of the class described, a wad cutting and placing mechanism, an actuating-pitman therefor, and intermediate connections between said wad cutting and placing mechanism and said actuating-pitman for varying the relative position of said mechanism with respect to said pitman, whereby shells of varying lengths may be operated upon, as and for the purpose set forth.

3. In a machine of the class described, a plunger, wad cutting and placing punches carried thereby, an operating-pitman for said

plunger, and intermediate connections between said pitman and plunger for varying the relative position of said plunger and pitman, whereby it may become operative at a higher or lower point in relation to the operating crank-shaft of said pitman, as and for the purpose set forth.

4. In a machine of the class described, a plunger, wad cutting and placing punches carried thereby, a pitman for actuating said plunger, means for adjusting the relative position of said plunger with reference to said pitman, and means for locking the parts in adjusted position, as and for the purpose set forth.

5. In a machine of the class described, a wad cutting and placing mechanism and a shell-crimping mechanism, a main drive-shaft, and means actuated from said shaft for operating said wad cutting and placing mechanisms, and means, also actuated by said shafts, for independently actuating said shell-crimping mechanism, as and for the purpose set forth.

6. In a machine of the class described, wad cutting and placing and shell-crimping mechanisms, a main drive-shaft for actuating the same, and means for independently arresting the operation of each of said several mechanisms, as and for the purpose set forth.

7. In a machine of the class described, wad cutting and placing devices and shell-crimping mechanism, and means for actuating the same, and means for automatically throwing said wad cutting and placing devices out of operation in advance of the arrest of said crimping mechanism, and means for successively presenting the shells to said parts, as and for the purpose set forth.

8. In a machine of the class described, the combination with an actuating-shaft and driving mechanism therefor, of means for disengaging said shaft from its driving mechanism automatically at a given stage in the loading operation, and manual devices for independently disengaging said driving mechanism at the will of the operator, as and for the purpose set forth.

9. In a machine of the class described, wad cutting and placing mechanism, a drive-shaft therefor, means for automatically arresting said shaft at a given stage in the operation of the machine, and manually-actuated auxiliary devices for arresting said shaft at any point in the operation at the will of the operator, as and for the purpose set forth.

10. In a machine of the class described, the combination of a driving-pulley, a shaft in engagement with and directly driven by said pulley, a clutch for disconnecting said pulley and shaft, said shaft having an eccentric for raising and lowering a crimping device, and means for disengaging said eccentric when the operation of the crimping device is not required, as and for the purpose set forth.

11. In a machine of the class described, the combination with a driving-shaft, of a cross-head or plunger, operated by said shaft and provided with guideways, means for adjustably regulating the distance through which said plunger operates, an opening through said plunger to admit of the passage of a wad-sheet, and an independently-movable crimper-bar arranged to operate upon the shells after they have passed beyond said plunger, as and for the purpose set forth.

12. In a machine of the class described, a plunger, wad cutting and placing punches carried thereby, a pitman, means for actuating the same, an eccentric carried by said pitman, and connections between said eccentric and plunger whereby the relative positions of said plunger and pitman may be adjusted, as and for the purpose set forth.

13. In a machine of the class described, a plunger, wad cutting and placing punches carried thereby, a pitman for actuating said plunger, said pitman provided with a bearing, a block mounted in said bearing and having an eccentric-pin, said plunger being connected to said eccentric-pin, and means for rotatively adjusting said block in its bearing, as and for the purpose set forth.

14. In a machine of the class described, a drive-shaft, wad cutting and placing and shell-crimping devices actuated therefrom, a feed-table, a rack connected thereto, a transverse shaft having gears for engaging said rack, feeding mechanism for said transverse shaft including a ratchet, means for operating said ratchet from said drive-shaft, means for locking said ratchet at each actuation thereof, manually-operated means for throwing said ratchet out of action, and manual devices for returning said feed-table to initial position, as and for the purpose set forth.

15. In a machine of the class described, wad cutting and placing and shell-crimping devices, means for actuating the same, a feed-carriage, ratchet mechanism for imparting a step-by-step advancement thereto, means for locking said ratchet at each actuation thereof and manually-actuated devices for throwing said ratchet mechanism out of action at will, as and for the purpose set forth.

16. In a machine of the class described, wad cutting and placing and shell-crimping devices, means for actuating the same, a feed-carriage, ratchet mechanism for imparting a step-by-step feed thereto, means for throwing said ratchet mechanism out of action, and manual devices for returning said carriage to its initial position, as and for the purpose set forth.

17. In a machine of the class described, wad cutting and placing and shell-crimping devices, means for actuating the same, a feed-carriage, feeding devices therefor, means for automatically arresting the wad cutting and placing devices, said means operating in advance of the arrival of the feed-carriage at the limit of its feed movement, and means for arresting the feed-carriage at will, as and for the purpose set forth.

18. In a machine of the class described, wad

cutting and placing devices, a feed-carriage, racks connected thereto, actuating-gears engaging said racks, ratchet mechanism for actuating the same, manually-actuated devices for throwing said ratchet mechanism out of operation at will, and manually-actuated devices for returning said carriage to its initial position, as and for the purpose set forth.

19. In a machine of the class described, the combination with a driving-shaft for operating a crimping device, of a cam on said shaft for operating a ratchet for giving movement to a carriage for holding and conveying a shell-plate, means for adjustably regulating the throw of said ratchet, and manually-actuated devices for positively throwing the same out of operation at a given point, as and for the purpose set forth.

20. In a cartridge-loading machine, wad cutting and placing devices and shell-crimping devices, in combination with a primary driving-shaft, connections between said primary driving-shaft and said shell-crimping devices for actuating the latter, a secondary driving-shaft, connections between said secondary driving-shaft and said wad cutting and placing devices for actuating the latter, said primary and secondary shafts having gears intermeshing with each other, means for rotating said primary shaft, and means for automatically disconnecting the gearing intermediate said shafts at any desired given point, whereby the primary shaft may continue to rotate after the secondary shaft has been arrested, as and for the purpose set forth.

21. In a cartridge-loading machine, wad cutting and placing devices, shell-crimping devices, a primary shaft and a secondary shaft, connections between said primary shaft and shell-crimping devices for actuating the latter, connections between said secondary shaft and said wad cutting and placing devices for actuating the latter, intermeshing gearing respectively carried by said shafts whereby said secondary shaft is rotated from said primary shaft, said gearing including a clutch, and means for automatically actuating said clutch at any desired given point to disconnect said gearing, whereby said secondary shaft is arrested without arresting said primary shaft, as and for the purpose set forth.

22. In a machine of the class described, the combination with a secondary driving-shaft having a crank and a pitman actuated thereby, of a cross-head or plunger, punches carried thereby, and adjustable connections between said plunger and pitman, whereby the point to which said punches descend may be varied, as and for the purpose set forth.

23. In a machine of the class described, the combination with a shaft having a crank, a pitman operated by said crank, a plunger, wad cutting and placing punches carried by said plunger, a block journaled in said pitman and provided with an eccentric projection, said eccentric projection forming a bearing for said plunger, a handle connected to said block for adjusting the same, and means for locking said handle in adjusted position, as and for the purpose set forth.

24. In a machine of the class described, the combination with a plunger, punches carried thereby, a die-block also mounted on said plunger for movement relative thereto and through which the punches operate, a die-plate carried by said die-block, the strip of wad material being arranged to pass over said die-plate, said die-plate having openings therethrough in which said punches operate, as and for the purpose set forth.

25. In a machine of the class described, the combination with a plunger, punches carried thereby, a die-block carried by said plunger and provided with a die-plate, said die-plate and die-block provided with openings through which said plungers operate, a punch-guiding and wad-stripping plate located above said die-block and die-plate, means for feeding a strip of wad material between said guiding and stripping plate and said die-plate, and means for presenting the shells in line with the openings in said die-plate and die-block, as and for the purpose set forth.

26. In a machine of the class described, a plunger, punches carried thereby, a die-block also carried by said plunger but having lost-motion connection therewith, whereby when the plunger descends the die-block will also descend until it engages the cartridge-shell when its motion will be arrested but said lost-motion connection will permit the further downward movement of the plunger, whereby when the shells are presented to the action of the punches they are engaged and held in alinement by said die-block during the advancing movement of the punches, as and for the purpose set forth.

27. In a machine of the class described, a plunger, punches carried thereby, a die-block having loose or lost motion connection with said plunger, means for presenting a wad-strip over said die-block, a stripping-plate through which said punches operate, and means for actuating said plunger, as and for the purpose set forth.

28. In a machine of the class described, a plunger, punches carried thereby, a die-block having passages for receiving and guiding said punches, said die-block having loose or lost motion connection with said plunger and serving as an alining-block for the shells, wad-strip-feeding mechanism and a stripper arranged over said die-block and through which the punches operate, as and for the purpose set forth.

29. In a machine of the class described, the combination with a plunger, punches carried thereby, a die-block having loose or lost motion connection with said plunger whereby it may be lowered upon the shells before the punches advance, as and for the purpose set forth.

30. In a machine of the class described, the combination with a plunger, punches carried

thereby, of a die-block, slotted supporting-links therefor, bolts carried by said plunger and operating in the slots in said links, thereby providing a loose or lost motion connection between said plunger and die-block whereby said die-block partakes but partially of the movement of said plunger, and means for locking said die-block in its lowered position, as and for the purpose set forth.

31. In a machine of the class described, the combination with a plunger, punches carried thereby, a die-block, slotted supporting-links for said die-block, bolts carried by said plunger and operating in the slots in said links thereby providing loose or lost motion between said die-block and plunger, a lock for locking said die-block in its lowered position, and means for automatically releasing said lock, as and for the purpose set forth.

32. In a machine of the class described, the combination with a wad-cutting plunger, feed-rolls arranged in advance of said wad-cutting plunger for feeding the wad-sheet, of a secondary pair of rolls located parallel with the feed-rolls and beyond the crimping-plunger, and adapted to receive the wad-sheet after having passed through the wad-cutting device, and to aid in drawing said wad-sheet forward and finally discharging it from the machine, as and for the purpose set forth.

33. In a cartridge-loading machine, the combination with wad cutting and placing mechanism, of feed-rolls arranged on one side thereof operating to deliver a wad-sheet to said cutting and placing mechanism, and secondary rolls located on the opposite side of said cutting and placing mechanism and adapted to receive the wad-sheet from said feed-rolls, and means whereby said secondary rolls are connected with and are actuated by and in unison with said feed-rolls, as and for the purpose set forth.

34. In a machine of the class described, the combination with wad placing and crimping devices, of a carriage moving in guideways, located in the table of the machine, and means for adjusting said guideways to take up wear, as and for the purpose set forth.

35. In a machine of the class described, wad placing and crimping devices, actuating means therefor, a feed-carriage, a stop adjustably mounted upon said carriage, a clutch device for connecting and disconnecting the actuating means of said wad placing and crimping devices, and connections actuated by said adjustable stop for disconnecting said clutch automatically when the carriage arrives at the limit of its movement, as and for the purpose set forth.

36. In a machine of the class described, a main drive-shaft and a secondary shaft, gearing for driving the latter from the former, a plunger carrying punches, connections operated from said secondary shaft for actuating said plunger, a second plunger carrying a crimper, connections operated by said main shaft for operating said second plunger, and means for automatically arresting said secondary shaft in advance of the arrest of said main shaft, as and for the purpose set forth.

37. In a machine of the class described, a main shaft, a secondary shaft, gearing for driving the latter from the former, wad cutting and placing devices actuated by said secondary shaft, shell-crimping devices actuated from said main shaft, a carriage, means actuated by said main shaft for advancing said carriage, a clutch for disconnecting said secondary shaft from its actuating-gearing, a stop mounted on said carriage, and means actuated by said stop for automatically disconnecting said clutch, whereby said wad cutting and placing devices are arrested without arresting the feed action of said carriage or the actuation of said shell-crimping devices, as and for the purpose set forth.

38. In a machine of the class described, the combination with wad placing and crimping devices, of a carriage for containing a shell-plate, means for registering and firmly holding the plate on said carriage, guides in which said carriage operates, an adjustable stop mounted on said carriage, and mechanism operated by said stop for arresting said wad-placing devices without arresting said crimping devices, as and for the purpose set forth.

39. In a machine of the class described, the combination with a shell-plate carriage, a feed-rack connected thereto, a transverse shaft having a gear thereon arranged to mesh with said feed-rack, means for automatically actuating said shaft periodically to advance said carriage step by step, including a ratchet mounted on said transverse shaft, manually-actuated devices for throwing said ratchet out of operation at will to arrest the advancing movement of said carriage and to permit the return thereof to initial position, and stops arranged to limit the forward and backward movements of said carriage whereby when said automatic step-by-step feed mechanism is thrown out of action said carriage is prevented from being advanced or retracted sufficiently to disengage the gear on said transverse shaft from said rack, as and for the purpose set forth.

40. In a machine of the class described, the combination with a drive-shaft, wad cutting and inserting and shell-crimping devices, of a carriage for holding and conveying the shells, racks located underneath said carriage and meshing in pinions on a shaft operated by means of a pawl and ratchet connected with the driving-shaft, whereby a step-by-step movement is imparted to said carriage, and at such times as the wad-cutting and shell-crimping devices are lifted from the shells, as and for the purpose set forth.

41. In a machine of the class described, the combination with a shell-feeding carriage, of a ratchet mechanism for operating the same, an operating-pawl and a locking-pawl for said ratchet, means for automatically lifting the

locking-pawl at the moment the driving-pawl starts to move the ratchet forward, and manually-actuated devices for raising said pawls out of action at will, as and for the purpose set forth.

42. In a machine of the class described, the combination of a shell-feeding carriage, a ratchet including a drive-pawl for operating the carriage, a locking-pawl, and means for lifting the driving-pawl and means actuated by the lifting or driving pawl for automatically lifting the locking-pawl, at the will of the operator, as and for the purpose set forth.

43. In a machine of the class described, the combination with a carriage, power mechanism for operating the same, automatic devices for actuating said power mechanism, means for disengaging the connections between said carriage and said power mechanism, and manual means independent of said power mechanism for moving said carriage forward or backward, as and for the purpose set forth.

44. In a machine of the class described, the combination of a wad cutting and placing device, a crimping device, a releasable driving-pulley and primary driving-shaft connected with said pulley and operated by it, and having a releasable eccentric for operating the crimping device, a secondary driving-shaft releasably connected with and operated by said primary shaft by means of a releasable gear, and having a crank for operating the wad cutting and placing device, adjustable means for regulating the stroke of said wad cutting and placing device, a die-block connected with the plunger and partaking in part of its movement, wad-punches operating through said die-block, releasable means for holding the die-block while the punches are being withdrawn, rollers for feeding the wad material, and corresponding rolls to receive it, connections actuated by the secondary driving-shaft for operating these parts, a carriage for conveying the shell-plate, mechanism including racks and pinions, ratchet and pawl, and connected with and operated step by step by the primary shaft for actuating said carriage, adjustable stops on said carriage by which the secondary shaft is arrested and the eccentric on said primary shaft is released, means for positively arresting the carriage at each of its movements and finally at the completion of the movements in either direction, means for disconnecting the carriage from the operation of the machine and means for moving it in either direction at the will of the operator, and adjustable guides for said carriage, as and for the purpose set forth.

45. In a machine of the class described, wad cutting and placing devices, a shell-feeding carriage, driving mechanism for said wad cutting and placing devices including a clutch, a trip, connections actuated thereby and operating to disengage said clutch, means for maintaining said trip under tension and said connections out of operative position with respect to said clutch, and a stop carried by said carriage for releasing said trip-retaining means, as and for the purpose set forth.

46. In a machine of the class described, wad cutting and placing devices, an actuating-shaft therefor, a clutch for rendering said shaft inoperative, a trip, connections actuated thereby for disengaging said clutch, means for retaining said trip under tension and said connections out of operative position, a stop for automatically releasing said retaining means, and auxiliary manual devices for releasing said trip at will, as and for the purpose set forth.

47. In a machine of the class described, a plunger carrying wad cutting and placing punches, and means for actuating the same, in combination with a guiding and alining die-block carried by said plunger and loose or lost motion connection therewith to permit of movement relative thereto, and a detachable lock for said die-block, as and for the purpose set forth.

48. In a machine of the class described, a plunger, wad cutting and placing punches carried thereby, a die-block carried by said plunger and having loose or lost motion connection therewith to permit of movement relative thereto, a locking-lever for locking said block in the limit of its movement, and means carried by said plunger for releasing said locking-lever, as and for the purpose set forth.

In witness whereof I have hereunto set my hand, this 5th day of August, 1899, in the presence of the subscribing witnesses.

GERSHOM MOORE PETERS.

Witnesses:
A. M. BEEKLEY,
E. F. GARRETT.