G. C. PIERCE.

METHOD AND MEANS FOR FORMING DIAPHRAGMS.

APPLICATION FILED FEB. 3, 1913.

1,091,763.

Patented Mar. 31, 1914.

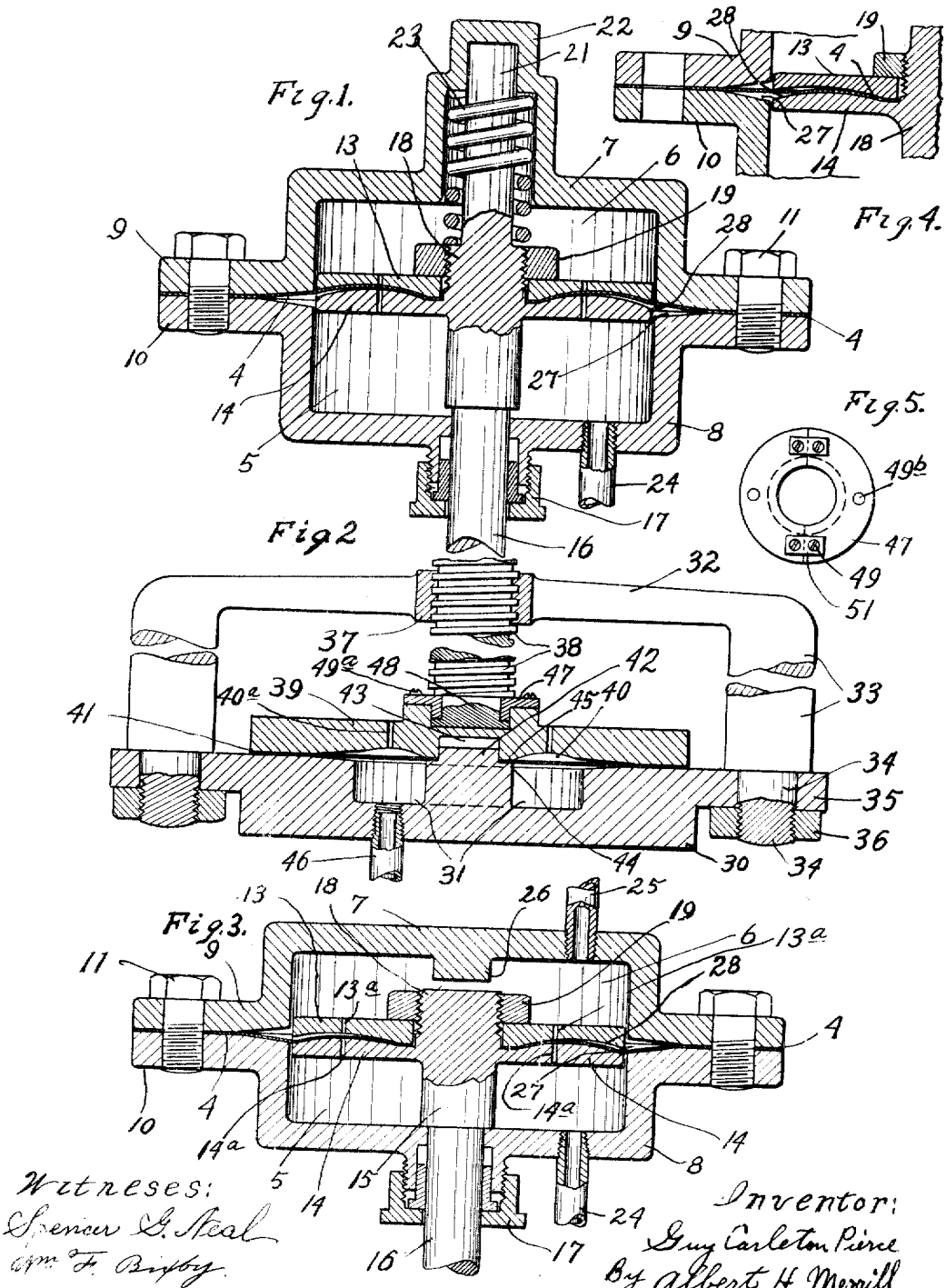

UNITED STATES PATENT OFFICE.

GUY CARLETON PIERCE, OF LOS ANGELES, CALIFORNIA, ASSIGNOR TO CALIFORNIA VALVE AND AIR BRAKE COMPANY, OF LOS ANGELES, CALIFORNIA, A CORPORATION OF CALIFORNIA.

METHOD AND MEANS FOR FORMING DIAPHRAGMS.

1,091,763. Specification of Letters Patent. **Patented Mar. 31, 1914.**

Application filed February 3, 1913. Serial No. 745,950.

To all whom it may concern:

Be it known that I, GUY CARLETON PIERCE, a citizen of the United States, residing in the city of Los Angeles, State of California, have invented a new and useful Method and Means for Forming Diaphragms, of which the following is a specification.

Diaphragms constructed according to the principles of this invention are more especially intended for use in the triple valves and pressure regulating valves of air braking systems, but are by no means limited to such use.

An object of this invention is to provide a method adapted for the forming of diaphragms of a character that will be capable of supplying the necessary amount of movement to the reciprocatory parts connected therewith, and yet the diaphragms be of a character that will never be bent into reverse curves during use, and hence will not suffer premature crystallization of the metal and consequent rupture along the lines where the metal bends when the diaphragms are in use. A diaphragm constructed according to the principles of this invention will wear for a long period of time even when subjected to heavy strain and frequent operation, and this desirable result can be obtained even when the diaphragm is made of soft metal of a thickness of one two-hundredths of an inch.

The diaphragm may be constructed of a single sheet of metal or other material, or it may be constructed of a plurality of such sheets. The sheets of each diaphragm are preferably dealt with one at a time in the use of the method hereinafter described.

In applying the diaphragm to the triple valves of air brakes it is preferable after the sheets have been separately formed, to place together from two to four of them when the metal used is thin annealed copper, each sheet being of No. 34 or No. 36 B. S. standard gage.

A diaphragm constructed as just described will produce excellent results when used for the diaphragm of a triple valve of the character described in the patent granted to S. G. Neal, December 26, 1911, No. 1,012,694.

Referring to the accompanying drawings, which illustrate the invention, Figure 1 is a vertical mid-section of a diaphragm chamber showing the diaphragm therein as it appears after said diaphragm has been formed. Fig. 2 is a vertical mid-section of a forming device used in carrying out a modification of the method, the diaphragm blank being shown in place. Fig. 3 is a vertical mid-section of still another diaphragm forming device which is, however, only a slight departure from the device shown in Fig. 1. Fig. 4 is a partial section to illustrate the shape of the diaphragm blank after the first step in shaping the diaphragm has been taken. Fig. 5 is a detail plan of a part of the operating means.

Referring in detail to the drawings, the diaphragm 4, after it has been formed by this method and before removal from the forming device, appears as shown in Fig. 1, the forming device being of such construction that it itself, with the formed diaphragm, is adapted to operate as a pressure regulating or valve-operating device for the triple valves of air brakes, thereby rendering it possible to form the diaphragm *in situ*. Said diaphragm 4 divides the chamber shown in Fig. 1 into a lower compartment 5 and an upper compartment 6, the casing consisting of an upper cap 7 and a lower cap or container 8. These two parts 7 and 8 are respectively provided with circular flanges 9 and 10, secured together by a series of cap-screws 11, the diaphragm being clamped between said flanges before the air pressure to form said diaphragm is applied thereto. Moreover, in putting the diaphragm blank in place the central portion thereof is clamped between the upper forming member 13 and the lower forming member 14, said members 13 and 14 having the general form of a pair of disks with curved faces which spoon into each other. The lower member 14 is preferably formed as a part of a head 15, carried by the operating rod 16, said operating rod playing through a stuffing box 17. When the diaphragm is formed *in situ*, as stated, the device shown in Fig. 1 is used for a valve operating device, the operating rod 16 being for the purpose of transmitting the motive power of the diaphragm to the extraneous part to be moved. The upper supporting member 13 is preferably a disk having a central aperture which receives the threaded upper portion 18 of the head 15, a clamping nut 19 being screwed onto said portion to clamp the upper sup-

porting member 13 against the diaphragm. The head 15 is also provided with an upwardly extending stem 21, which travels within a guiding dome 22. A compression spring 23 engages the portion 18 of the head normally to hold the parts in the depressed position to cause the lower end of head 15 to engage the lower wall of the member 8. Fluid pressure is introduced to chamber 5 through the inlet pipe 24. In Fig. 3 is shown a modified form of device for carrying out this method, and this view will be described next because it resembles the device already described more closely than does the device shown in Fig. 2.

In Fig. 3 the compression spring 23 of Fig. 1 is dispensed with and its function is performed by fluid pressure admitted through pipe 25. The cap 7 is provided with an internal boss 26, which forms a stop against which the head 18 strikes to limit the upward movement of the diaphragm formers 13 and 14.

In forming the diaphragm by means of the device thus far described this method is carried out as follows: Before the cap 7 is put in place, the operating rod 16 and head 15 are put into operative position, together with the forming member 14 that forms a part of said head. The diaphragm 4 is then laid on top of the lower forming member 14, said diaphragm being provided with a central aperture to permit the same to be fitted over the extension 18 of the head. The diaphragm is at this time in a perfectly flat condition. After the diaphragm is thus laid in place, the member 13 is placed thereover and nut 19 is clamped down upon said member 13 to make an air tight fit between forming members 13 and 14. This first step of the operation partially forms the diaphragm into the proper shape, as shown in Fig. 4 by reason of stretching the central portion of the diaphragm blank out of true alinement and compelling the same to conform partially to the curved faces of the disks 13 and 14. The upper cap 7 is now placed on top of flange 10 and bolted to said flange by means of cap screws 11. The next step is now taken by admitting fluid pressure through the inlet pipe 24 into the lower chamber 5, and the formation of the diaphragm is thus completed by the pressure of the fluid forcing or stretching the same up to the position shown in Fig. 1 and also removing any irregularities in the metal that may have been caused by the clamping of the diaphragm blank.

The adjacent faces of flanges 9 and 10 are beveled away, as shown in Figs. 1 and 3, to provide a circumferential inwardly widening recess 27 to receive the marginal portion of the movable part of the diaphragm. The curved faces of the supporting members 13 and 14 are likewise so spaced from each other as to form approximately continuations of the walls of recess 28.

It will be understood that the spring 23 in Fig. 1 serves to arrest the upward movement of the diaphragm forming plates and also, when the diaphragm is put into actual use as a motor, to return the diaphragm to its lowered position when the fluid pressure is exhausted from beneath the diaphragm. In Fig. 3 the upward movement of the parts is arrested by the parts 18 and 26, and a fluid pressure means is provided as a substitute for the spring 23 for forcing the parts to their lower-most position.

It will be understood that the special forms of apparatus illustrated in Figs. 1 and 3 will not be employed for forming the diaphragms unless they are to be formed, so to speak, *in situ*, that is, where they are to be actually used. Where the diaphragms are to be removed after they are formed, I employ a simpler form of apparatus, as illustrated, for example, in Fig. 2.

In Fig. 3 the diaphragm is shown in the lowest position with the air pressure still against the upper side thereof; in Fig. 1 the air pressure has just been admitted against the lower side of the diaphragm throwing the same against the upper wall of the tapered recess 28. The air pressure will then move the diaphragm supports up to the position shown in Fig. 1, the diaphragm itself being exposed to strain only along the narrow annular space between the mouths of recesses 27 and 28. The greater portion of the strain is removed from the diaphragm by providing sufficient slack metal in the diaphragm to permit same to move from wall to wall of the forming and supporting members 13 and 14 and not ruffle or kink the metal diaphragm. This is accomplished by constructing said members 13 and 14 a fraction of an inch smaller than the actual diameter of the chamber in which the diaphragm is to operate, the intervening diaphragm surface only, being subjected to continued tension of fluid pressure, the rest of the area of the diaphragm being supported by members 13 and 14.

The diaphragm forming device shown in Fig. 2 consists of a base plate 30, having an annular recess 31 in its face. Said plate 30 supports a yoke 32 the arms 33 of said yoke having reduced threaded end portions 34 which extend through a flange 35 around base plate 30. Said threaded portions 34 are secured in place by nuts 36 as shown in Fig. 2. In the threaded bore 37 of yoke 32 operates a follower screw 38 to compress the follower or screw plate 39 against the diaphragm blank 41. Said screw plate 39 has on its lower surface an annular concave recess 40 of a broad shallow character, as shown, said recess being designed to give the proper curvature to the diaphragm when the

latter is forced thereagainst by fluid pressure. In the center of a screw plate 30 is an annular rise 42, which engages a recess 43 in the screw plate 39. The diaphragm blank 41 is formed with a central aperture which fits over said rise 42, the central portion of said diaphragm being clamped between annular shoulder 44 of the base plate and annular shoulder or face 45 of the follower plate 39. The peripheral portion of the diaphragm is at the same time clamped between the base plate and follower plate as shown, both clamping surfaces being air tight so that when fluid pressure is admitted to chamber 31 the portion of the diaphragm not in contact with the forming plate is positively forced up into the concave recess 40 of said forming plate and properly stretched and shaped. Small air vents 40[a] permit the air to escape from the concave recess 40. In forming the diaphragm, fluid pressure is admitted to the annular chamber 31 through pipe 46. Compression screw 38 is preferably connected with plate 39 by means of a split washer 47 (see Fig. 5) which is placed around a head 48 formed on the lower end of said screw 38. The halves of said split washer are held in place by screws 49 extending through small pieces 51. Screws 49[a] extending through holes 49[b] hold said washer to the screw plate 39.

Regarding Fig. 2, the object in forming the diaphragm in the manner illustrated in this view is to reduce the cost of manufacture in the following manner: By placing the diaphragm in a flat condition between the base plate 30 and the screw plate 39, the necessity of removing bolts 11 and nut 19 is eliminated when forming each individual diaphragm. As will be seen from this view, all that is necessary is to raise the screw 38 by the hand wheel (not shown), place the diaphragm blank 41 in position, admit the air through pipe 46 into annular chamber 31 for a period of five seconds, after which the air pressure is removed, screw 38 is lifted, and the completed diaphragm removed in perfect condition of the same contour as the diaphragms illustrated in Figs. 1 and 3.

It will be observed that in the device shown in Fig. 2 the forming plate 39 serves the same function, so far as the shaping of the diaphragm is concerned, as the disk 13 and the flanges of the cap 7 shown in Fig. 1.

Each sheet of metal for a diaphragm is formed separately. It has been found preferable to form said sheets separately owing to the fact that the copper is smooth and that it is therefore difficult to hold rigid and prevent a plurality of superimposed sheets from "creeping", which will cause a ruffling of the metal due to the fact that the compression by air takes place between the peripheral portion and the central portion of each sheet. When the attempt is made to form more than one diaphragm at a time, more than one hundred pounds pressure is required to force the metal to conform to the convex or concave surfaces. Forty pounds pressure per square inch is sufficient to form a diaphragm form No. 36 gage, or 5/1000 of an inch thickness of metal.

One of the advantages of forming the diaphragm by this method as compared with forming said diaphragms by means of male and female dies is the eliminating of the fine adjustment required on such male and female dies where the thickness of metal to be formed is .005 of an inch or less. Furthermore, such dies would, under constant use, wear away and consequently lose their accuracy. Further, owing to the thinness of metal used, it has been found impractical to use such male or female dies because mechanical pressure was not equally distributed throughout the surface of the blank out of which the diaphragm is being formed, resulting in rupture of the metal at the points of greatest strain; but by the application of the fluid pressure to one side of the diaphragm blank, said diaphragm blank is forced against a concavity on the other side thereof in such a uniform manner that even when the blank consists of a sheet of very thin, soft metal, the uniform distribution of the fluid pressure thereover forces the diaphragm blank into the proper shape without subjecting any part thereof to rupture or excessive strain.

I claim:

1. In a diaphragm forming device, a base plate having an annular recess in the face thereof, a forming plate adapted to clamp a sheet metal blank between itself and said base plate, said forming plate having an annular concave recess registering with said recess of the base plate and making an air tight fit within said recess and also around the periphery thereof, and means to supply fluid pressure to the recess of the base plate to force a metal blank into said annular concave recess of the forming plate.

2. In a diaphragm forming device, a base plate having a fluid receiving space surrounding the central portion thereof, a forming plate adapted to coöperate with said base plate, said forming plate having a concave annular recess upon the face thereof which is directed toward said base plate, a suitable frame, and a follower screw operating in said frame, said follower screw carrying said forming plate to move said forming plate to and from the operative position, and means to supply fluid pressure to the space in said base plate to force the diaphragm blank into the required shape.

3. In a diaphragm forming device, a base

plate having a fluid receiving space surrounding the central portion thereof, a forming plate adapted to coöperate with said base plate, said forming plate having a concave annular recess upon the face thereof which is directed toward said base plate, a suitable frame, combined centering and clamping means carried by said frame to move said forming plate to and from the operative position, and means to supply fluid pressure to the space in said base plate to force the diaphragm blank into the required shape.

4. The herein described art of making diaphragms, consisting in air-tightly and unyieldingly clamping the blank both at its center and all around its edge, leaving an unclamped free annular portion, providing an annular concave shaping face at one side of said unclamped part of the diaphragm, and applying fluid pressure directly to the other side of the unclamped part of the diaphragm to thereby bodily stretch that portion of the diaphragm and permanently set and shape it against said concave face by said fluid pressure.

5. In a diaphragm forming apparatus, a base, a forming means adapted to clamp a sheet metal blank between itself and said base, said forming means having an annular concave recess in the face which faces the base, said base and said forming means serving to air-tightly clamp the blank at its center and also around its edge, and means for applying fluid pressure to the face of the blank opposite the forming means to thus permanently set and shape the blank to the annular recess in said forming means.

6. The herein described art of making diaphragms, consisting in air-tightly clamping the blank at its center as well as all around its edge, leaving an unclamped free annular portion, and then applying fluid directly to one face of the blank under sufficient pressure to bodily stretch and set said annular unclamped portion of the blank.

7. The herein described method of shaping diaphragm blanks which consists in maintaining the central and peripheral portions of a diaphragm blank in fixed position, leaving the intermediate annular portion free to yield, and then forcibly applying a fluid body to one side of said blank against said free portion thereof to bodily stretch and set said free portion to the desired extent.

In testimony whereof I have hereunto signed my name in the presence of two subscribing witnesses at Los Angeles, in the county of Los Angeles and State of California, this 25th day of January, 1913.

GUY CARLETON PIERCE.

Witnesses:
SPENCER G. NEAL,

Copies of this patent may be obtained for five cents each, by addressing the "Commissioner of Patents, Washington, D. C."

Correction in Letters Patent No. 1,091,763.

It is hereby certified that in Letters Patent No. 1,091,763, granted March 31, 1914, upon the application of Guy Carleton Pierce, of Los Angeles, California, for an improvement in "Methods and Means for Forming Diaphragms," an error appears in the printed specification requiring correction as follows: Page 4, for name of second-mentioned witness read *Albert H. Merrill;* and that the said Letters Patent should be read with this correction therein that the same may conform to the record of the case in the Patent Office.

Signed and sealed this 5th day of May, A. D., 1914.

[SEAL.]

J. T. NEWTON,

Acting Commissioner of Patents.