(12) INTERNATIONAL APPLICATION PUBLISHED UNDER THE PATENT COOPERATION TREATY (PCT)

(19) World Intellectual Property Organization
International Bureau

(43) International Publication Date
21 June 2012 (21.06.2012)

WIPO | PCT

(10) International Publication Number
WO 2012/079151 A1

(51) International Patent Classification:
G01R 21/133 (2006.01) *G08C 17/00* (2006.01)
G01R 21/06 (2006.01)

(21) International Application Number:
PCT/CA2011/001359

(22) International Filing Date:
14 December 2011 (14.12.2011)

(25) Filing Language: English

(26) Publication Language: English

(30) Priority Data:
61/423,233 15 December 2010 (15.12.2010) US

(71) Applicant *(for all designated States except US)*: **TRI-ACTA POWER TECHNOLOGIES, INC.** [CA/CA]; Box 582-7 Mill Street, Almonte, Ontario KOA 1A0 (CA).

(72) Inventors; and

(75) Inventors/Applicants *(for US only)*: **PERRY, David Gareth** [CA/CA]; 48 Mill Street, Almonte, Ontario KOA 1A0 (CA). **JOANNOU, Emil T.** [CA/CA]; 2884 Ramsay Conc 3C, RR1, Almonte, Ontario K0A 1A0 (CA). **GALLANT, Denis A.** [CA/CA]; 114 Dunhaven Drive, Ottawa, Ontario K0A 1T0 (CA).

(74) Agent: **SPRIGINGS, Mark**; A. Gowling Lafleur Henderson LLP, 160 Elgin Street, Suite 2600, Ottawa, Ontario K1P 1C3 (CA).

(81) Designated States *(unless otherwise indicated, for every kind of national protection available)*: AE, AG, AL, AM, AO, AT, AU, AZ, BA, BB, BG, BH, BR, BW, BY, BZ, CA, CH, CL, CN, CO, CR, CU, CZ, DE, DK, DM, DO, DZ, EC, EE, EG, ES, FI, GB, GD, GE, GH, GM, GT, HN, HR, HU, ID, IL, IN, IS, JP, KE, KG, KM, KN, KP, KR, KZ, LA, LC, LK, LR, LS, LT, LU, LY, MA, MD, ME, MG, MK, MN, MW, MX, MY, MZ, NA, NG, NI, NO, NZ, OM, PE, PG, PH, PL, PT, QA, RO, RS, RU, RW, SC, SD, SE, SG, SK, SL, SM, ST, SV, SY, TH, TJ, TM, TN, TR, TT, TZ, UA, UG, US, UZ, VC, VN, ZA, ZM, ZW.

(84) Designated States *(unless otherwise indicated, for every kind of regional protection available)*: ARIPO (BW, GH, GM, KE, LR, LS, MW, MZ, NA, RW, SD, SL, SZ, TZ, UG, ZM, ZW), Eurasian (AM, AZ, BY, KG, KZ, MD, RU, TJ, TM), European (AL, AT, BE, BG, CH, CY, CZ, DE, DK, EE, ES, FI, FR, GB, GR, HR, HU, IE, IS, IT, LT, LU, LV, MC, MK, MT, NL, NO, PL, PT, RO, RS, SE, SI, SK, SM, TR), OAPI (BF, BJ, CF, CG, CI, CM, GA, GN, GQ, GW, ML, MR, NE, SN, TD, TG).

Published:

— *with international search report (Art. 21(3))*

(54) **Title**: WIRELESS VOLTAGE REFERENCE BROADCAST IN A DISTRIBUTED ENERGY METERING SYSTEM

Figure 2

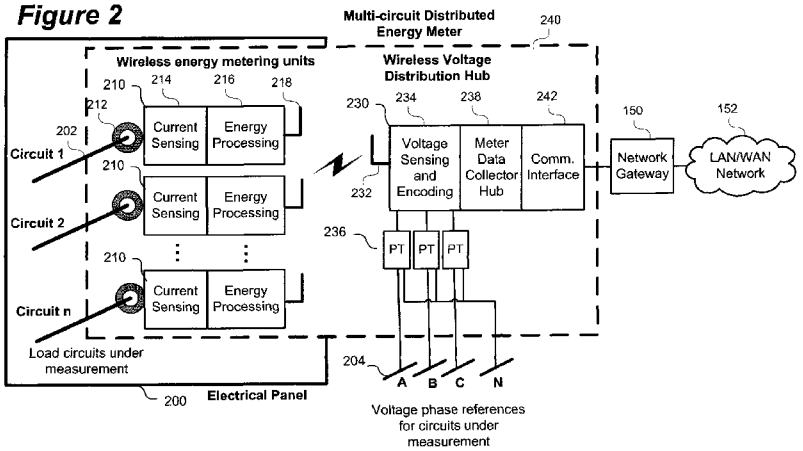

(57) **Abstract**: A system and method of wireless voltage reference broadcast in a distributed energy metering system is provided. A voltage reference is determined at a distribution hub for wirelessly and transmitted in voltage reference data frames providing voltage samples and a clock synchronization from an alternating current (AC) line under measurement. Wireless metering units, each coupled to an AC load circuit, receive the voltage reference data frames wherein the current sampling clock of the wireless metering units are synchronized to a voltage sampling clock of the distribution hub for determining current samples from the respective AC load circuit to calculate energy data parameters.

WO 2012/079151 A1

WIRELESS VOLTAGE REFERENCE BROADCAST IN A DISTRIBUTED ENERGY METERING SYSTEM

TECHNICAL FIELD

The present disclosure relates to wireless energy meters for residential, commercial, and industrial electrical power circuits and in particular to the wireless method of accurately distributing the voltage references for generating revenue-grade industrial active, reactive and apparent power measurements.

BACKGROUND

Standard industrial (20 Amps and above) electrical power/energy meters are often based on current transformers (CT's) for real-time current sensing. An industrial power meter will typically have a CT per load circuit under measurement (e.g. a 3-phase circuit requires three CT's). Load circuits under measurements are inductively applied as the primary side of the CT via the CT's core aperture and the CT's secondary core winding is directly wired to the industrial power meter via a pair of metallic wires. Additionally, an industrial meter will have one potential transformer (PT) per voltage phase being measured. Typically, an industrial facility is a 3-phase electrical environment and therefore three PTs are attached to the industrial power meter to provide associated voltage references for power/energy calculations. The industrial power meter's processing unit calculates active, reactive, and apparent power demand (kW), energy consumption (kW-h), and power factors from the wired CTs (real-time current) and the associated PTs (real-time voltage).

In typical industrial environment, the direct wiring of CTs to the energy meter is problematic and labour intensive. In the electrical facility room, the load circuits to be measured are typically only accessible inside the electrical panelboards, and therefore the CTs have to be installed inside the panelboard. The centralized energy meter is generally installed in the electrical facility room adjacent (i.e. external) to the circuit panelboard. For a large number of CTs, the wiring of CTs from inside the panelboard (via conduits and punch-outs) to an external meter is labour intensive, time consuming, and error prone. The potential exposure of the CT wires, crimps, and screw blocks is also a safety concern in some installations.

The present disclosure of a wireless voltage reference distribution method leads to the design of an industrial CT metering system that eliminates the requirement for any CT panelboard wiring. The elimination of CT panelboard wiring greatly reduces meter installation cost and time. Also, the elimination of CT panelboard wiring greatly reduces the electrical safety concerns of an industrial CT metering installation.

SUMMARY

In accordance with an aspect of the present disclosure there is provided a method of wireless distributed energy metering, the method comprising determining a voltage reference sampling clock at a distribution hub; generating one or more digitized voltage samples from an alternating current (AC) line under measurement coupled to the AC line by a voltage sensing device; encoding a voltage reference frame comprising the one or more digitized voltage samples; and broadcasting the voltage reference data frame wirelessly to one or more wireless metering units each coupled to an AC load circuit of the AC line where a current sample clock of each of the wireless energy metering units is synchronized to the distribution hub voltage reference sampling clock and the one or more voltage samples and one or more current samples are utilized in calculating energy parameters sampled by the wireless energy metering units from the respective AC load circuit.

In accordance with another aspect of the present disclosure there is provided a method of wireless distributed energy metering in a wireless metering unit, the method comprising receiving a voltage reference data frame through a wireless interface; decoding one or more voltage samples from the voltage reference data frame; synchronizing a current sampling clock of the wireless metering unit based upon the voltage reference data frame; determining a current sample from a current sensing device coupled to an alternating current (AC) load circuit of the AC line, wherein the current sampling clock of the wireless energy metering unit is synchronized to a voltage sampling clock of a distribution hub.

In accordance with yet another aspect of the present disclosure there is provided a wireless metering distribution hub comprising a voltage sensing device coupled to an alternating current (AC) line under measurement; a wireless interface;

and a processor for determining a voltage reference sampling clock; generating one or more digitized voltage samples from the AC line under measurement coupled to the AC line by the voltage sensing device; encoding a voltage reference data frame comprising the one or more digitized voltage samples and synchronization identifier determined from the voltage reference sampling clock; and broadcasting from the wireless interface the voltage reference data frame wirelessly to one or more wireless metering units.

In accordance with yet another aspect of the present disclosure there is provided a wireless energy metering unit comprising a current sensing device coupled to a load circuit of an alternating current (AC) line under measurement; a wireless interface; and a processor for receiving a voltage reference data frame through the wireless interface; decoding one or more voltage samples from the voltage reference data frame; synchronizing a current sampling clock of the wireless metering unit based upon the voltage reference data frame; and determining a current sample from the current sensing device, wherein a current sampling clock of the wireless energy metering unit is synchronized to voltage sampling clock of a distribution hub.

In accordance with still yet another aspect of the present disclosure there is provided a system for wireless distributed energy metering comprising a distribution hub for wirelessly transmitting voltage reference data frames providing voltage samples and a clock synchronization from an alternating current (AC) line under measurement; and one or more wireless metering units each coupled to an AC load circuit for receiving the voltage reference data frames wherein the current sampling clock of each of the one or more wireless metering units is synchronized to a voltage sampling clock of the distribution hub for determining current samples from the respective AC load circuit to calculate energy data parameters.

BRIEF DESCRIPTION OF THE DRAWINGS

Further features and advantages of the present disclosure will become apparent from the following detailed description, taken in combination with the appended drawings, in which:

FIGURE 1 shows a block diagram of a typical industrial energy meter system with metallic wired attached CTs;

FIGURE 2 shows a system block diagram of an industrial distributed energy metering system with wireless attached CTs;

FIGURE 3 shows a system block diagram for a wireless voltage reference broadcast node in a single phase distributed energy measurement meter;

FIGURE 4 shows a timing diagram of the voltage and current sampling alignment in a wireless broadcast voltage reference distribution metering sub-system;

FIGURE 5 a system block diagram for a wireless voltage reference broadcast node for a multi-phase distributed energy measurement meter;

FIGURE 6 shows a timing diagram of the voltage and current sampling alignment in a multi-phase wireless broadcast voltage reference distribution metering sub-system;

FIGURE 7 shows a flowchart of a method of wireless voltage distribution in a wireless energy metering system;

FIGURE 8 shows a flowchart of a method for wireless voltage reference distribution transmission in a multi-phase AC energy metering system;

FIGURE 9 show a flowchart of a method for receiving energy measurements from wireless energy metering units;

FIGURE 10 shows a flowchart of a method for received wireless voltage reference distribution for a multi-phase AC energy metering system; and

FIGURE 11 shows a schematic of an inductive power supply operating from the CT's secondary winding.

DETAILED DESCRIPTION

Embodiments are described below, by way of example only, with reference to Figs. 1-11.

Although the following discloses example methods, system and apparatus including, among other components, software executed on hardware, it should be noted that such methods, system and apparatus are merely illustrative and should not be considered as limiting. For example, it is contemplated that any or all of these hardware and software components could be embodied exclusively in hardware, exclusively in software, exclusively in firmware, or in any combination of hardware, software, and/or firmware. Accordingly, while the following describes example methods and apparatus, persons having ordinary skill in the art will readily appreciate that the examples provided are not the only way to implement such methods, system and apparatus.

It will be appreciated that for simplicity and clarity of illustration, where considered appropriate, reference numerals may be repeated among the figures to indicate corresponding or analogous elements. In addition, numerous specific details are set forth in order to provide a thorough understanding of the embodiments described herein. However, it will be understood by those of ordinary skill in the art that the embodiments described herein may be practiced without these specific details. In other instances, well-known methods, procedures and components have not been described in detail so as not to obscure the embodiments described herein. Also, the description is not to be considered as limiting the scope of the embodiments described herein.

Figure 1 shows a standard 3-phase industrial energy meter 110 with locally wired current 112 and potential 118 transformers for sensing load currents 102 and associated voltage references 104 respectively. A traditional industrial meter 110 as shown in Figure 1 is typically installed external to the electrical panel 100 in order to accommodate the electrical wiring code regulations. The standard configuration of Figure 1 requires interconnecting the in-panel CTs 112 to the external energy meter 110 via twisted wire pairs 114 that pass through the side walls of the electrical panel 100 via punch-outs and conduits. Power demand and energy consumption parameters are calculated by the centralized energy processor unit 122 from local current sensing 116 and voltage sensing 120 data. The standard industrial CT energy meter 110 communicates its meter reading data to a remote metering data

collector hub 140 via wired or wireless in-building communications interface 124. The metering data collector hub 140 is typically interconnected to back-office automated metering systems (AMR) via standard network interfaces, gateways 150, and LAN/WAN networks 152.

Figure 2 shows a system block diagram of wireless broadcast voltage reference distribution in a multi-circuit industrial wireless energy metering system. The voltage phase references 204 and potential transformers 236 of the multi-circuit distributed energy metering system 240 are physically associated with the centralized wireless voltage distribution hub 230. The voltage phase references 204 at wireless voltage distribution hub 230 are sensed 234 via the voltage sensing device such as PTs 236, then digitized at a high sampling rate in sync with the AC cycle under measurement (e.g. 60 Hz). The digitized voltage samples are then encoded 234 and transmitted by broadcasting through a wireless interface 232 of the wireless voltage distribution hub 230 via a radio frequency (RF) technology and received by the wireless metering units 210 wireless interfaces 218, such as a wireless transceiver and antenna module. The wireless energy metering system disclosed removes the requirement for cabling between the current sensing device and the energy meter enabling installation flexibility while maintaining metering performance. The RF technology may utilized licensed or unlicensed radio frequency spectrum using proprietary, or standardized communication technologies such as but not limited to Bluetooth, Bluetooth low energy, Wi-Fi IEEE 802.11, IEEE 802.15, ultra wide band (UWB), ONE-NET, Wireless USB, 6LoWPAN, and Zigbee technologies. The plurality of wireless metering units 210 in the electrical panel 200 calculate power demand and energy consumption parameters 216 from the current sensing device 212 sensed current through circuit 202 and associated wireless remote voltage phase reference received from the distribution hub. The current sensors can be any sensor capable of determining a current value such as a current transformer (CT), Rogowski coil, shunt, hall effect sensor; and Micro-Electro-Mechanical Systems (MEM) based sensor. The determined power/energy consumption parameters are transferred to data hub module 238 of the wireless voltage distribution node 230 via an RF interface. The wireless voltage distribution hub node 230 is typically interconnected to back-office automated metering systems

(AMR) via standard network interfaces 242, gateways 150, and LAN/WAN networks 152.

Figure 3 shows the block diagram of a wireless voltage reference distribution sub-system in a single-phase energy measurement system. A wireless voltage reference broadcast node 330 receives the AC voltage from an AC line 310 under measurement via a step-down PT 312. The voltage reference determined by voltage sensing device, PT 312, is applied to both zero-crossing detection circuit 314 and A/D converter 322. The zero-crossing circuit 314 supplies the phase-lock-loop (PLL) 316 with a trigger signal on each zero crossing of the AC voltage input signal 310. Based on the zero-crossing trigger signal, the PLL 316 generates a synchronized 32 times sampling clock for the A/D converter 322 for the digitization of the AC input reference voltage. The PLL's 316, 32 times sampling clock signal is also applied to a transmission delay adjustment function 318 to provide transmission delay compensation for the wireless interface provided by the RF physical layer (PHY) transceiver chip 326. A processor 332 provides data processing and payload processing functionality. A transmission delay adjustment function (Tp) 318 generates an advanced transmit frame synchronization (sync) signal to trigger the RF broadcast transmission of voltage reference data frames the are encoded by voltage reference data frame encoding function 324. The trigger occurs slightly ahead in time to the voltage reference sampling clock. One or more active wireless energy metering units 360 operating on the designated RF channel receive the transmitted broadcast voltage reference data frame via RF PHY transceiver module 354 wireless interface. The received voltage reference data frame is decoded by processor 362 in voltage reference data frame decoding function 352 and the remote voltage reference samples are stored in memory 363 for power and energy parameter calculations function 348. The wireless energy metering unit's 360 received RF PHY circuitry 354 or processor 362 generates an Rx sync signal that is in synchronization and alignment with the received voltage reference data frames. The voltage reference Rx sync signal is applied to the wireless energy metering unit's PLL 350. Aligned by the Rx sync signal, the PLL 350 will generate a synchronized 32 times clock for use in sampling and digitizing by analog to digital converter 346 of the sense current 340 under measurement by a current sensing

device, CT 342. The digitized current samples are transferred to the processor 348 for revenue-grade active, reactive, and apparent energy calculations based on the stored in memory 363 temporally aligned remote voltage reference samples.

In a fully self-contained wireless metering unit, the wireless metering unit can inductively harvest operating power from the line circuit under measurement via the CT's secondary winding 342. The power supply 345 extracts a charging current from the electrical conductor circuit under measurement via inductive means through a common secondary current sensing winding of the CT 342. Alternatively, the power supply 345 may be provided as a battery that may either be chargeable by the charging current or operate independently of the CT operation for providing power to components of the wireless metering unit.

In Figure 3, the calculated energy readings from the processor 348 are assembled by energy frame encoding 356 into a Tx energy readings frame ready for transmission upon a polling request message contained within the Rx voltage frame. When the wireless energy metering unit 360 receives an energy readings polling request from the hub node 330 via the voltage reference data frame, it will transmit the assembled Tx energy readings frame to the hub node 330 via the RF PHY 354 and wireless interface. The Rx energy readings frame received from a wireless energy metering unit 360 via the RF interface and are decoded by processor 372 and the energy readings are stored in the hub node's energy data storage memory 333 in a suitable format for network transfer and viewing. The energy data can be transferred or viewed by remote network devices via the hub node's network interface 374.

In Figure 3 some functions of the wireless voltage distribution data hub node 330 and the wireless energy metering units 360 are shown as discrete functional blocks or processor implemented functions, however all aspect of the wireless voltage distribution data hub node 330 and the wireless energy metering units 360, except CT and PT can be implemented on an integrated processor or SOC (System-on-a-Chip). An integrated MCU (SOC) may provide MCU, RF, A/D, PLL, timers, memory, and network interface all integrated in a single integrated circuit (IC). Alternatively discrete components or a combination of discrete components

and processor implemented functions may be utilized to implement one or more functions of the wireless distribution data hub node 330 or wireless energy metering units 360.

Figure 4 shows a timing diagram of the alignment of the wireless energy meter current samples with the remote voltage reference samples. At the voltage reference distribution node 330, a zero-crossing signal 410 is generated from the AC line signal 310. From the zero-crossing signal 410, a high-rate synchronized signal 412 is generated for sampling the voltage reference at 32 times the AC line rate. For every AC line cycle, 32 voltage reference samples from the previous cycle are assembled into a RF frame 414 for RF broadcast 332. The timing of the transmit voltage reference data frame is advanced by a small amount 416 to account for fixed transceiver delays. At the wireless energy metering unit 360, the SYNC byte delimiter of the received voltage reference data frame 420 is used to generate a received sync signal 422 and a synchronized 32 times line rate current sampling signal 424 that is aligned with the voltage reference sampling signal 412 of the transmit voltage reference node 330.

Figure 5 show a system block diagram of a multi-phase distributed metering system. In this simplified block diagram only transmission functions are shown as the reception process of energy readings would be similar to Figure 3. A multi-phase distributed metering system includes a multi-phase wireless voltage distribution hub 500 and a plurality of wireless energy metering units of which one or more wireless energy metering unit will be located on Phase A circuits, one or more wireless energy metering units on Phase B circuits, and one or more wireless energy metering unit on phase C circuits. Over a common RF channel, the multi-phase wireless voltage distribution hub 500 will broadcast the three voltage reference phases (A,B,C) using a single multi-phase Tx voltage reference data frame encoding 526 provided by a processor where each phase reference voltage have been sampled by a common 32 times line rate clock. Active wireless energy metering units will lock onto the multi-phase Rx voltage reference data frame and extract the phase A, B, or C voltage samples depending on its configuration from higher layer management systems. The basic operation of the multi-phase wireless

voltage distribution hub (Figure 5) is similar to the single phase metering system shown in Figure 3. In the multi-phase system, each voltage reference phase is digitally sampled and processed by A/D converters 512, 514, 516 using a common 32 times line rate clock derived from Phase_A zero crossing 520 and PLL 522. The three digitized reference voltage sample streams are multiplexed over a common multi-phase Tx voltage reference data frame and broadcast by the RF PHY 528 providing wireless interface to an antenna. Similar to the single phase practice (Figure3), the Tx Frame trigger timing is delay pay a determined transmission delay 524 determined to advance the Tx Frame to compensate for RF PHY transmission delays.

In alternate practice, Phase B or Phase C voltage reference could also be used for deriving the AC-cycle synchronized 32 times high-rate voltage sample clock. The 32 times AC-cycle voltage sampling clock is arbitrary, and other embodiments could use other multiple values of the AC-cycle line rate (e.g. 48, 64, 128, 256, etc). Other embodiments could make use of a free running high-rate (e.g. 32x, 64x, etc) voltage sample clock that is non-synchronized to either Phase A, B, or C voltage references. In other possible embodiments, each phase reference voltage in a multi-phase system could be assigned a separate RF channel to broadcast its voltage samples to all wireless energy metering units operating on the designated RF channel.

Figure 6 shows the timing alignment of the multi-phase wireless voltage distribution metering system of Figure 5. A common 32 times line rate voltage sample clock 612 is generated from the zero-crossing signal 610. The generated multi-phase Tx broadcast voltage reference data frame 614 is composed of 32 voltage samples from each of voltage references A, B, and C. Similar to the single phase system timing shown in Figure 4, the Tx voltage reference data frame 614 has a small fixed lead 616 from the zero-crossing signal 610 in order to align the Rx current sample clock 624 to the Tx voltage sample clock 612. Alternatively individual Tx voltage RF frames for each AC voltage phase instead of the common multi-phase Tx voltage RF frame may be utilized.

Figure 7 show a method 700 of wireless voltage distribution and energy metering in a wireless energy metering system. Based on the AC line rate, a voltage reference timing is determined by the wireless voltage distribution node (702). Voltage samples are digitized from the AC line (704) and a voltage reference data frame is generated by encoding the timing reference, such as for example as a SYNC identifier, and the one or more voltage samples are encoded in the payload of the voltage reference data frame (706). A single-phase sample or multi-phase samples may be provided in the voltage reference data frame depending on system configuration. The frame is then broadcasted, or transmitted, by a wireless interface to one or more wireless metering units (708) in relation to the AC cycle zero-crossing of the AC line voltage being measured. The transmission of the voltage reference data frame is adjusted to transmission, and/or propagation and reception delays between the wireless voltage distribution and data hub node and the wireless metering units. The wireless energy metering units receive the voltage reference data frame (710) and decode the timing reference and voltage samples (712) and align a sampling clock to the timing reference of the voltage reference sampling clock defined by the SYNC identifier (714). In a multi-phase configuration the wireless metering units uses the voltage sample associated with the particular phase being metered by the metering units. The AC load circuit associated with each wireless energy metering unit is measured to determine a current sample (716). Energy parameters can then be calculated for active, reactive and apparent power/energy from temporally aligned voltage and current samples (718). The calculated energy parameters are transmitted from each wireless energy metering unit (720) to the hub. The hub receives the transmission from each wireless energy metering unit and decodes the energy parameters (722). The energy parameters are then processed and stored (724). The voltage reference data frame may also include a polling address or wireless energy metering unit identifier address where each wireless metering unit is provided with a unique address, the polling address notifying wireless metering units when they should transmit their determined energy data. The wireless energy metering units may transmit the energy parameters periodically or may only transmit energy parameters when specifically identified by a request from the hub for example in as identified in a polling address transmitted with the voltage reference.

Figure 8 shows the voltage reference wireless broadcast distribution transmit method 800 for a multi-phase AC metering system. In one embodiment, the process begins by monitoring the Phase A voltage reference (802) to detect a zero-crossing event (804). When a zero-crossing event is detected once per AC-cycle, a clock signal is generated (820) in sync and phase with the phase_A voltage reference. The AC-cycle zero-crossing signal is employed to generate a synchronized 32 times clock signal (808) for sampling the three voltage references (810). The 32 voltage samples from each phase are encoded into a packet frame (816) ready for RF broadcast distribution (818). Based on off-line measurements the Tx voltage reference data frame trigger signal (824) is set to lead the AC-cycle clock by the RF transceiver transmission delays (822) for triggering the SYNC delimiter transmission (818). It should be noted that in a single-phase distribution system only 1-phase voltage (810) would be sampled and would be encoded in the Tx frame format (816). It should be noted that the voltage clock reference may not be synchronized to the zero-crossing signal but may alternatively be free-running relative to the AC line cycle.

Figure 9 provides a method 900 for energy parameter readings transfer from a wireless energy metering unit to the hub node. As part of the broadcast voltage reference data frame over the wireless technology, a next CT metering unit address is included to request energy readings from a particular wireless energy metering unit. The wireless interface is monitored (902) for received energy readings frame and upon reception (904) the energy data is stored (906) along with CT metering unit address. The energy readings data from one or more CT metering units is processed and aggregated (908) in a format suitable for file transfer (910) and viewing.

Figure 10 shows the voltage reference wireless broadcast distribution receive method 1000 for a multi-phase AC metering system. The RF medium/channel is monitored (1002) for received voltage reference broadcast packets. When a voltage broadcast preamble and SYNC delimiter is detected (1004) at regular intervals once per AC-cycle (e.g. 60 Hz), the received broadcast multi-phase voltage reference data frame, is decoded (1020) and one of the phase voltage samples (A, B, or C) is

selected (1022) for power/energy calculation (1010) based on control from higher layer management system. If a single-phase voltage sampling is utilized by the distribution hub, the single phase will be utilized. The detected frame SYNC delimiter byte is aligned with the remote voltage reference sampling clock and is employed to generate a local synchronized 32 times clock (1006) for sampling the CT load circuit current (1008) in temporal alignment with the remote transmit voltage sampling. The resulting load current are utilized for active, reactive, and apparent energy/power calculations (1010) in conjunction with the temporally aligned voltage samples and stored as energy parameters in local memory for reporting (1012). The Rx voltage reference data frame is monitored (1024) for a polling address that matches a polling address assigned to the wireless energy metering unit (1024). When the associated polling address is detected (YES at 1026) an assembled Tx energy data frame is transmitted wirelessly to the distribution hub (1030). If the polling address is not received (NO at 1026), the energy parameters are stored and assembled for the next polling address to be received.

Figure 11 shows an embodiment of an inductive power supply 1100 operating from the CT's (1101 secondary winding 1104 of a wireless metering unit. The primary winding 1102 of the CT 1101 is the circuit under current sensing. The CT's secondary voltage is full-wave rectified 1106 and applied to an output charging capacitor 1118. A low drop-out regulator 1120 generates the regulated voltage required by the control electronics of the wireless energy metering unit. To minimize power and heat dissipation, the inductive power supply makes use of a silicon-controlled rectifier (SCR) circuit 1110 to clamp-down the secondary voltage when it gets much above the required output voltage. The SCR 1110 is controlled by feedback from the output charging capacitor voltage 1118 via SCR bias circuit 1116. To improve stability at low currents, a field-effect transistor (FET) circuit 1112 is provided to shut-off the SCR 1110 via external control 1114. For current sensing, a burden resistor 1108 is located in series with the inductive power supply and inside the bridge rectifier 1106. Power from the inductive power supply is provided to components of the wireless metering unit removing the requirement for a battery component to power the wireless metering unit.

In some embodiments, any suitable computer readable media can be used for storing instructions for performing the processes described herein. For example, in some embodiments, computer readable media can be transitory or non-transitory. For example, non-transitory computer readable media can include media such as magnetic media (such as hard disks, floppy disks, etc.), optical media (such as compact discs, digital video discs, Blu-ray discs, etc.), semiconductor media (such as flash memory, electrically programmable read only memory (EPROM), electrically erasable programmable read only memory (EEPROM), etc.), any suitable media that is not fleeting or devoid of any semblance of permanence during transmission, and/or any suitable tangible media. As another example, transitory computer readable media can include signals on networks, in wires, conductors, optical fibers, circuits, any suitable media that is fleeting and devoid of any semblance of permanence during transmission, and/or any suitable intangible media.

Although the description discloses example methods, system and apparatus including, among other components, software executed on hardware, it should be noted that such methods and apparatus are merely illustrative and should not be considered as limiting. For example, it is contemplated that any or all of these hardware and software components could be embodied exclusively in hardware, exclusively in software, exclusively in firmware, or in any combination of hardware, software, and/or firmware. Accordingly, while the following describes example methods and apparatus, persons having ordinary skill in the art will readily appreciate that the examples provided are not the only way to implement such methods and apparatus.

In some embodiments, any suitable computer readable media or memory can be used for storing instructions for performing the processes described herein. For example, in some embodiments, computer readable media can be transitory or non-transitory. For example, non-transitory computer readable media can include media such as magnetic media (such as hard disks, floppy disks, etc.), optical media (such as compact discs, digital video discs, Blu-ray discs, etc.), semiconductor media (such as flash memory, electrically programmable read only memory (EPROM), electrically erasable programmable read only memory (EEPROM), etc.), any

suitable media that is not fleeting or devoid of any semblance of permanence during transmission, and/or any suitable tangible media. As another example, transitory computer readable media can include signals on networks, in wires, conductors, optical fibers, circuits, any suitable media that is fleeting and devoid of any semblance of permanence during transmission, and/or any suitable intangible media.

CLAIMS:

1. A method of wireless distributed energy metering, the method comprising:

determining a voltage reference sampling clock at a distribution hub;

generating one or more digitized voltage samples from an alternating current (AC) line under measurement coupled to the AC line by a voltage sensing device;

encoding a voltage reference frame comprising the one or more digitized voltage samples; and

broadcasting the voltage reference data frame wirelessly to one or more wireless metering units each coupled to an AC load circuit of the AC line where a current sample clock of each of the wireless energy metering units is synchronized to the distribution hub voltage reference sampling clock and the one or more voltage samples and one or more current samples are utilized in calculating energy parameters sampled by the wireless energy metering units from the respective AC load circuit.

2. The method of claim 1 wherein the voltage reference data frame further comprises a clock synchronization identifier.

3. The method of claim 1 wherein the clock synchronization identifier is broadcast in relation to a zero-crossing of the AC line by the distribution hub.

4. The method of any one of claims 2 or 3 wherein the each of the one or more wireless metering units uses the clock synchronization identifier to synchronize the current sample clock to the remote voltage reference sampling clock.

5. The method of claim 3 wherein the voltage reference data frame is transmitted before the AC zero-crossing occurs based upon a set

transmission delay proportional to the transceiver processing delay between the distribution hub and the one or more wireless metering units.

6. The method of any one of claims 1 to 5 wherein determining the voltage sample is for a single-phase of the AC circuit.

7. The method of any one or claims 1 to 6 wherein determining the one or more voltage samples further comprises determining a respective voltage sample for each phase of a multi-phase AC circuit and encoding the voltage reference data frame comprises encoding each respective voltage samples for each of the phases in the voltage reference data frame.

8. The method of claim 7 wherein one of the one or more wireless metering units uses one of the voltage samples in the voltage reference data frame associated with a respective phase based upon the phase of the associated load circuit.

9. The method of any one of claims 1 to 8 wherein the voltage sensing device is selected from the group comprising: potential transformer (PT), and resistor divider network.

10. The method any one of claims 1 to 9 wherein the wireless energy metering units comprises a current sensing device selected from a group comprising: current transformer (CT), Rogowski coil, shunt, hall effect sensor; and Micro-Electro-Mechanical Systems (MEM) based sensor.

11. The method of any one of claims 1 to 10 further comprising:

receiving at the one or more wireless metering units the voltage reference data frame through a wireless interface;

synchronizing the current sampling clock of each of the wireless energy metering units to the distribution hub voltage reference sampling clock;

generating the current samples of the AC load circuit from a current sensing device coupled to a respective one or more wireless metering units; and

calculating at each of the one or more wireless metering units one or more energy parameters based on the measured one or more current samples and one or more received voltage samples.

12. The method of claim 11 wherein the energy parameters comprises one or more of active, reactive and apparent power/energy parameters.

13. The method of any one of claims 1 to 12 further comprising:

transmitting a polling address associated with one of the one or more wireless metering units, wherein the polling address identifies one of the one or more wireless metering units when to transmit energy data back to a data hub.

14. The method of claim 13 further comprising decoding at each of the one or more wireless metering units a polling address wherein the wireless metering unit associated with the polling address transmits the determined energy parameters when the polling address is received.

15. The method of any one of claims 1 to 14 wherein the voltage reference sampling clock is a high-rate free-running clock which is non-synchronized to the AC-line rate.

16. The method of any one of claims 1 to 15 wherein the energy parameters comprises one or more of active, reactive and apparent power/energy parameters.

17. A method of wireless distributed energy metering in a wireless metering unit, the method comprising:

receiving a voltage reference data frame through a wireless interface;

decoding one or more voltage samples from the voltage reference data frame;

synchronizing a current sampling clock of the wireless metering unit based upon the voltage reference data frame;

determining a current sample from a current sensing device coupled to an alternating current (AC) load circuit of the AC line, wherein the current sampling clock of the wireless energy metering unit is synchronized to a voltage sampling clock of a distribution hub.

18. The method of claim 17 further comprising:

calculating energy parameters using the voltage sample and current sample; and

transmitting the calculated energy parameters to a data hub through the wireless interface.

19. The method of claim 18 wherein transmitting the calculated energy parameters further comprises:

determining a polling address from the voltage reference data frame associated with wireless metering unit; and

transmitting the determined energy parameters to the data hub when the polling address is received.

20. The method of claims 18 or 19 wherein the energy parameters comprises one or more of active, reactive and apparent power/energy parameters.

21. The method of any one of claims 17 to 20 wherein the voltage reference data frame further comprises a synchronization identifier for synchronizing the current sampling clock.

22. The method of any one of claims 17 to 21 wherein the one or more voltage samples in the voltage reference data frame is for a single-phase of an AC circuit.

23. The method of any one of claims 17 to 21 wherein the one or more voltage samples in the voltage reference data frame comprises a respective voltage sample for each phase of a multi-phase AC circuit wherein the wireless metering unit uses one of the voltages samples in the voltage reference

data frame associated with a respective phase based upon the phase of the associated load circuit.

24. The method any one of claims 17 to 23 wherein the current sensing device is selected from a group comprising: current transformer (CT), Rogowski coil, shunt, hall effect sensor; and Micro-Electro-Mechanical Systems (MEM) based sensor.

25. The method of any one of claims 17 to 23 wherein the wireless metering unit comprises an inductive power supply coupled to a current transformer secondary winding for harvesting operating power from the AC line under measurement to power the wireless energy metering unit.

26. A wireless metering distribution hub comprising:

a voltage sensing device coupled to an alternating current (AC) line under measurement;

a wireless interface; and

a processor for:

determining a voltage reference sampling clock;

generating one or more digitized voltage samples from the AC line under measurement coupled to the AC line by the voltage sensing device;

encoding a voltage reference data frame comprising the one or more digitized voltage samples and synchronization identifier determined from the voltage reference sampling clock; and

broadcasting from the wireless interface the voltage reference data frame wirelessly to one or more wireless metering units.

27. The wireless metering distribution hub of claim 26 further comprising:

a zero crossing circuit for determining a crossing of the AC voltage input signal.

28. The wireless metering distribution hub of any one of claims 26 or 27 further comprising:

a phase-lock-loop (PLL) for receiving a trigger from the zero crossing circuit and for generating a synchronized sampling clock for generating the synchronization identifier.

29. The wireless metering distribution hub of claim 28 further comprising:

an analog-to-digital converter for receiving an analog voltage sample from the voltage sensing device and converting the analog voltage sample to a digital voltage sample from the sampling clock generated by the PLL.

30. A wireless energy metering unit comprising:

a current sensing device coupled to a load circuit of an alternating current (AC) line under measurement;

a wireless interface; and

a processor for:

receiving a voltage reference data frame through the wireless interface;

decoding one or more voltage samples from the voltage reference data frame;

synchronizing a current sampling clock of the wireless metering unit based upon the voltage reference data frame; and

determining a current sample from the current sensing device, wherein a current sampling clock of the wireless energy metering unit is synchronized to voltage sampling clock of a distribution hub.

31. The wireless energy metering unit of claim 30 further comprising:

a phase-lock-loop (PLL) for receiving a trigger from the voltage reference data frame to generating the current sampling clock; and

an analog-to-digital converter for receiving an analog current sample from the current sensing device and converting it to a digital current sample in synchronization with the sampling clock.

32. The wireless energy metering unit of claim 31 wherein the trigger is a synchronization identifier in the voltage reference data frame.

33. The wireless energy metering unit of claim 30 wherein the voltage reference data frame further comprises a synchronization identifier for synchronizing the current sampling clock.

34. The wireless energy metering unit of any one of claims 30 to 33 wherein the processor further performs:

determining a polling address from the voltage reference data frame associated with wireless metering unit; and

transmitting the determined energy parameters to a data hub when the polling address is received.

35. The wireless energy metering unit of any one of claims 30 to 34 wherein the processor further performs:

calculating energy parameters using the one or more voltage sample and one or more current samples; and

transmitting the calculated energy parameters to a data hub through the wireless interface.

36. The wireless energy metering unit of claim 35 wherein the energy parameters comprises one or more of active, reactive and apparent power/energy parameters.

37. The wireless energy metering unit any one of claims 30 to 36 wherein the current sensing device is selected from the group comprising: current transformer (CT), Rogowski coil, shunt, hall effect sensor; and Micro-Electro-Mechanical Systems (MEM) based sensor.

38. The wireless energy metering unit of any one of claims 30 to 37 further comprising an inductive power supply coupled to the current sensing device for harvesting operating power from the line circuit under measurement to power the wireless energy metering unit.

39. A system for wireless distributed energy metering comprising:

a distribution hub for wirelessly transmitting voltage reference data frames providing voltage samples and a clock synchronization from an alternating current (AC) line under measurement; and

one or more wireless metering units each coupled to an AC load circuit for receiving the voltage reference data frames wherein the current sampling clock of each of the one or more wireless metering units is synchronized to a voltage sampling clock of the distribution hub for determining current samples from the respective AC load circuit to calculate energy data parameters.

40. The system of claim 39 wherein the one or more wireless metering units calculate energy data parameters using the voltage samples and current samples and transmitting the calculated energy parameters to a data hub through the wireless interface.

41. The system of any one of claims 39 or 40 wherein the voltage reference data frames further comprises a clock synchronization identifier.

42. The system of claim 41 wherein the clock synchronization identifier is broadcast in relation to an AC zero-crossing of the AC line by the distribution hub.

43. The system of any one of claims 41 or 42 wherein the each of the one or more wireless metering units uses the clock synchronization identifier to

synchronize the current sample clock to the remote voltage reference sampling clock.

44. The system of claim 41 wherein the voltage reference data frame is transmitted before the AC zero-crossing occurs based upon a set transmission delay proportional to the transceiver processing delay between the distribution hub and the one or more wireless metering units.

45. The system of any one of claims 40 to 44 the voltage sample is determined for a single-phase of an AC circuit.

46. The system of any one or claims 40 to 44 wherein the voltage samples are determined for each phase of a multi-phase AC circuit and data frame is encoded for each respective voltage samples for each of the phases in the reference data frame.

47. The system of claim 46 wherein the one or more wireless metering units voltage sample using the voltage reference data frame associated with a respective phase based upon the phase of the associated load circuit.

48. The system of any one of claims 40 to 47 wherein the wireless distribution hub comprises a voltage sensing device is selected from a group comprising: potential transformer (PT), and resistor divider network.

49. The system of any one of claims 40 to 47 wherein each of the one or more wireless metering units comprises a current sensing device selected from a group comprising: current transformer (CT), Rogowski coil, shunt, hall effect sensor; and Micro-Electro-Mechanical Systems (MEM) based sensor.

50. The system of any one of claims 40 to 49 wherein a polling address is transmitted from the distribution hub associated with one of the one or more wireless metering units, wherein the polling address identifies one of the one or more wireless metering units when to transmit energy data back to a data hub.

51. The system of claim 50 wherein each of the one or more wireless metering units decodes a polling address wherein the wireless metering unit associated with the polling address transmits the determined energy parameters when the polling address is received.

52. The system of any one of claims 40 to 50 wherein a voltage reference sampling clock in the distribution hub is a high-rate free-running clock which is non-synchronized to the AC-line rate.

53. The system of claim 39 wherein each of the one or more wireless metering units further comprising an inductive power supply coupled to a current sensing device for harvesting operating power from the line circuit under measurement to power the wireless metering unit.

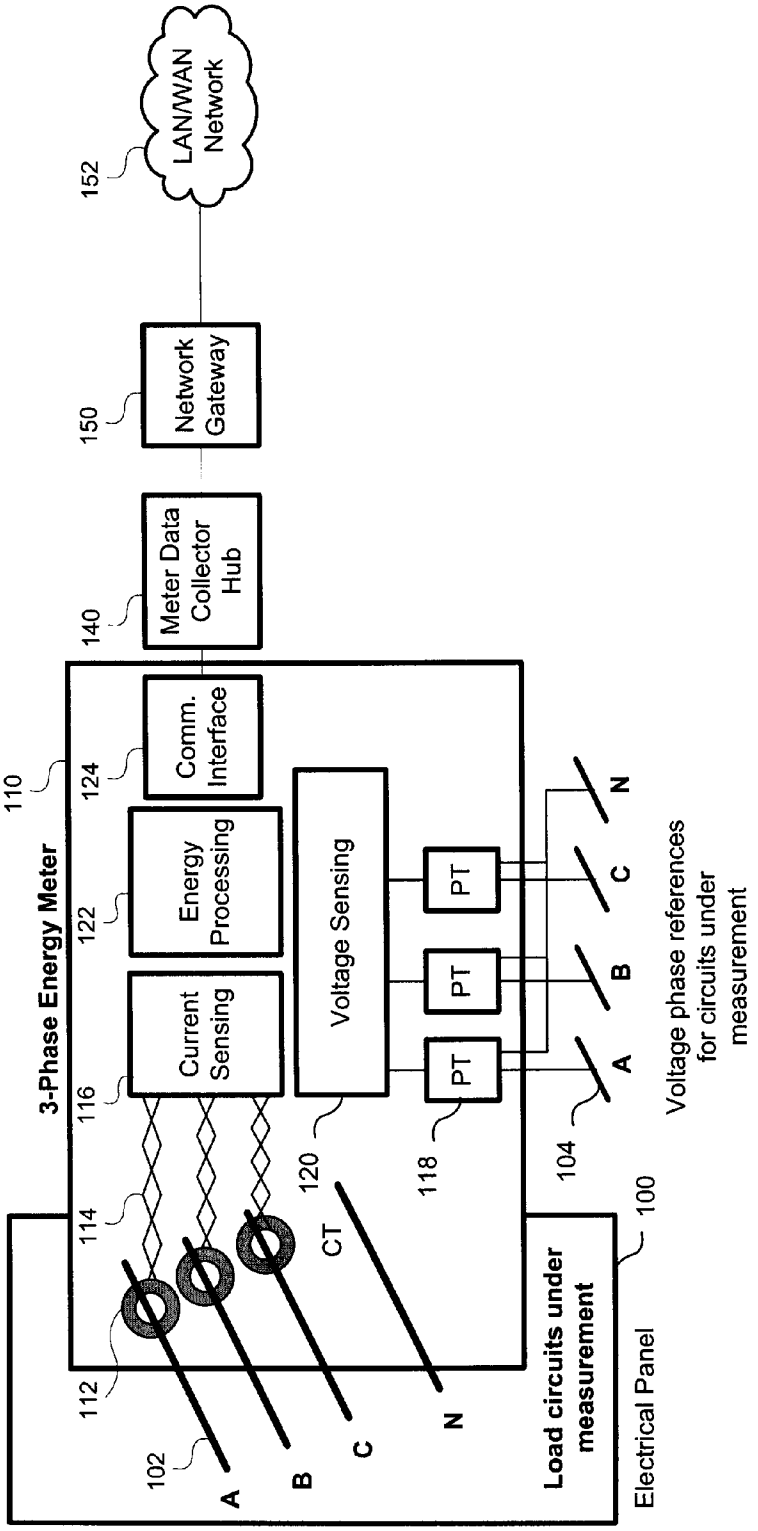
LAN/WAN Network
152
Network Gateway
150
Meter Data Collector Hub
140
Comm. Interface
124
Energy Processing
122
Current Sensing
116
Voltage Sensing
120
PT
PT
PT
118
3-Phase Energy Meter
110
114
112
102
A
B
C
N
CT
104
A
B
C
N
Voltage phase references for circuits under measurement
Load circuits under measurement
Electrical Panel
100

Figure 1

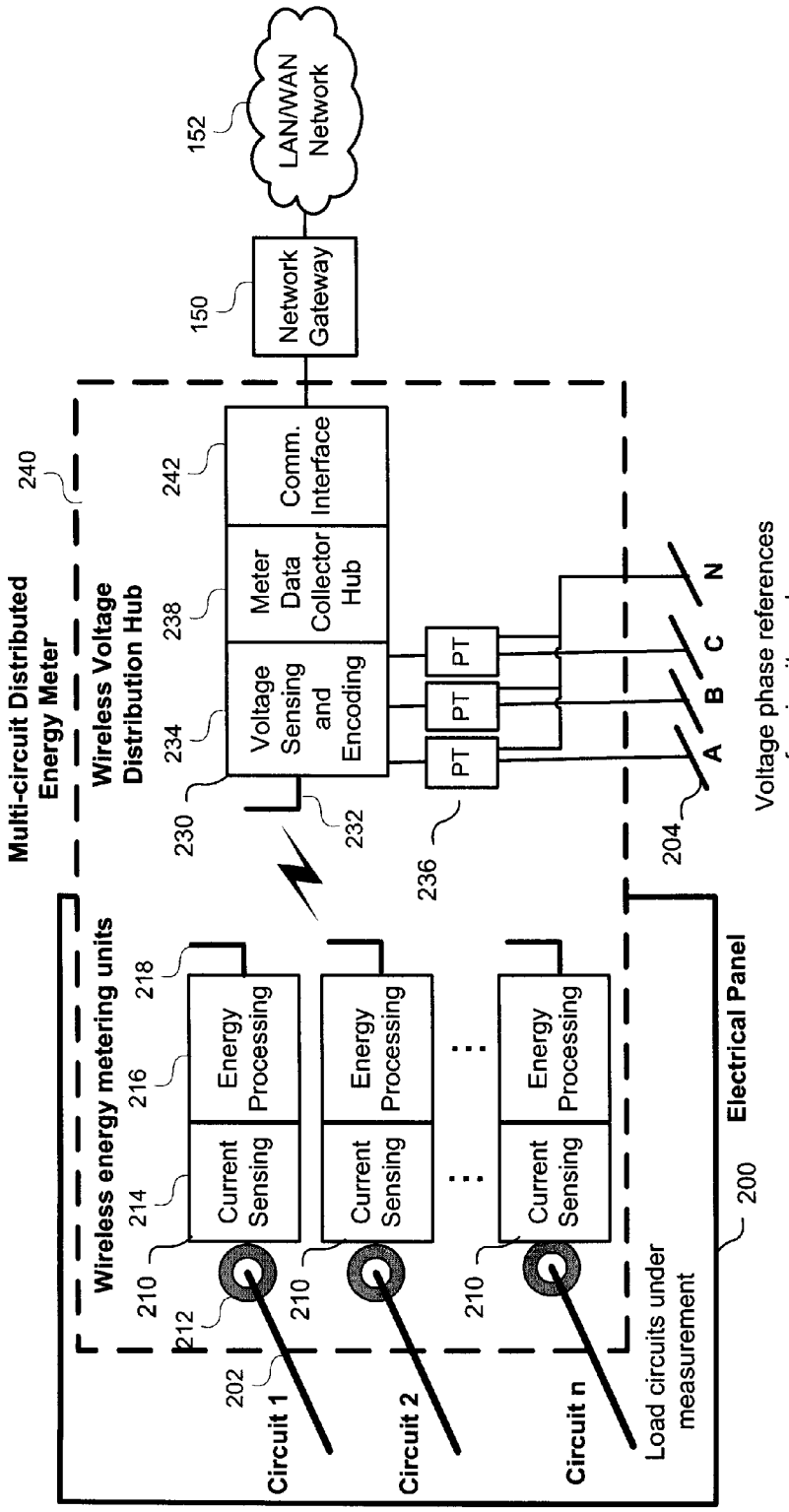
LAN/WAN Network
152
Network Gateway
150
Multi-circuit Distributed Energy Meter
240
Wireless Voltage Distribution Hub
Comm. Interface
242
Meter Data Collector Hub
238
Voltage Sensing and Encoding
234
230
232
PT
PT
PT
236
A
B
C
N
204
Voltage phase references for circuits under measurement
Wireless energy metering units
Energy Processing
218
216
Current Sensing
214
210
212
202
Circuit 1
Circuit 2
Circuit n
Load circuits under measurement
Electrical Panel
200

Figure 2

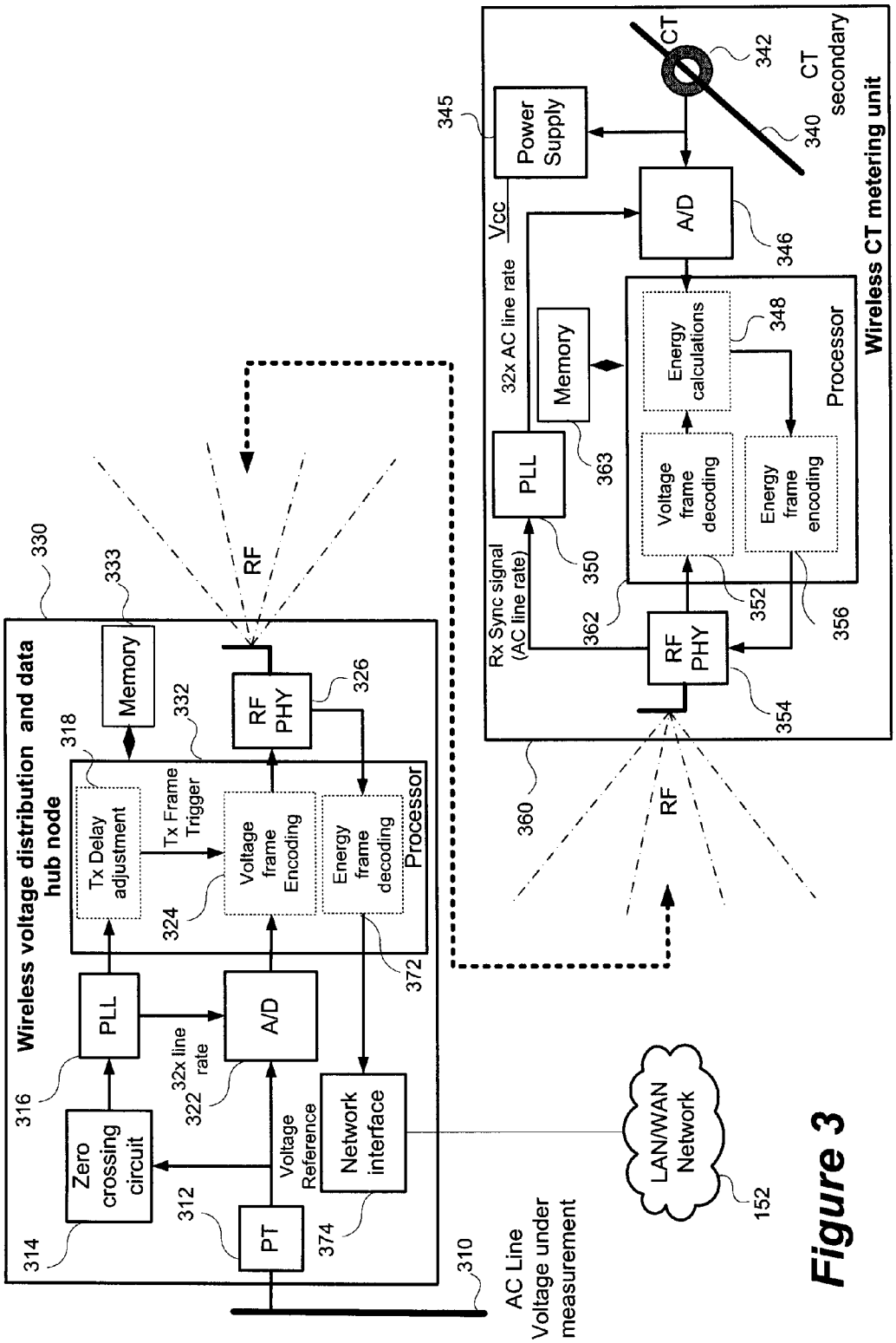
Wireless voltage distribution and data hub node
330
Memory
333
RF
RF PHY
326
318
332
Tx Delay adjustment
Tx Frame Trigger
Voltage frame Encoding
Energy frame decoding
Processor
324
372
PLL
A/D
316
32x line rate
322
Zero crossing circuit
Voltage Reference
Network interface
314
312
PT
374
310
AC Line Voltage under measurement
LAN/WAN Network
152
Wireless CT metering unit
CT
342
CT secondary
340
345
Power Supply
Vcc
A/D
346
32x AC line rate
Memory
Energy calculations
348
Processor
PLL
363
Voltage frame decoding
Energy frame encoding
Rx Sync signal (AC line rate)
350
362
352
356
RF PHY
354
360
RF

Figure 3

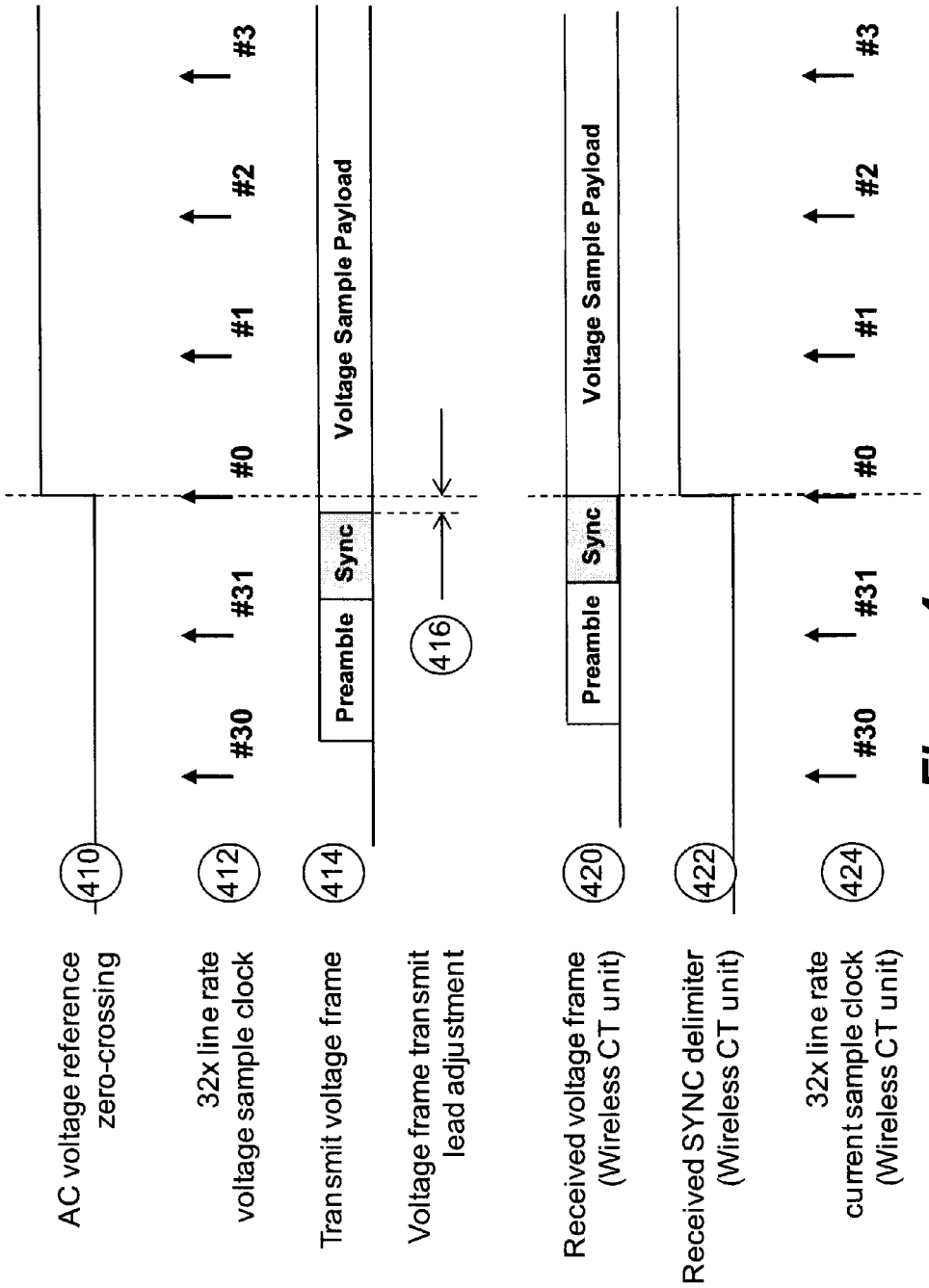
AC voltage reference zero-crossing
410
32x line rate voltage sample clock
412
#30
#31
#0
#1
#2
#3
Transmit voltage frame
414
Preamble
Sync
Voltage Sample Payload
Voltage frame transmit lead adjustment
416
Received voltage frame (Wireless CT unit)
420
Preamble
Sync
Voltage Sample Payload
Received SYNC delimiter (Wireless CT unit)
422
32x line rate current sample clock (Wireless CT unit)
424
#30
#31
#0
#1
#2
#3

Figure 4

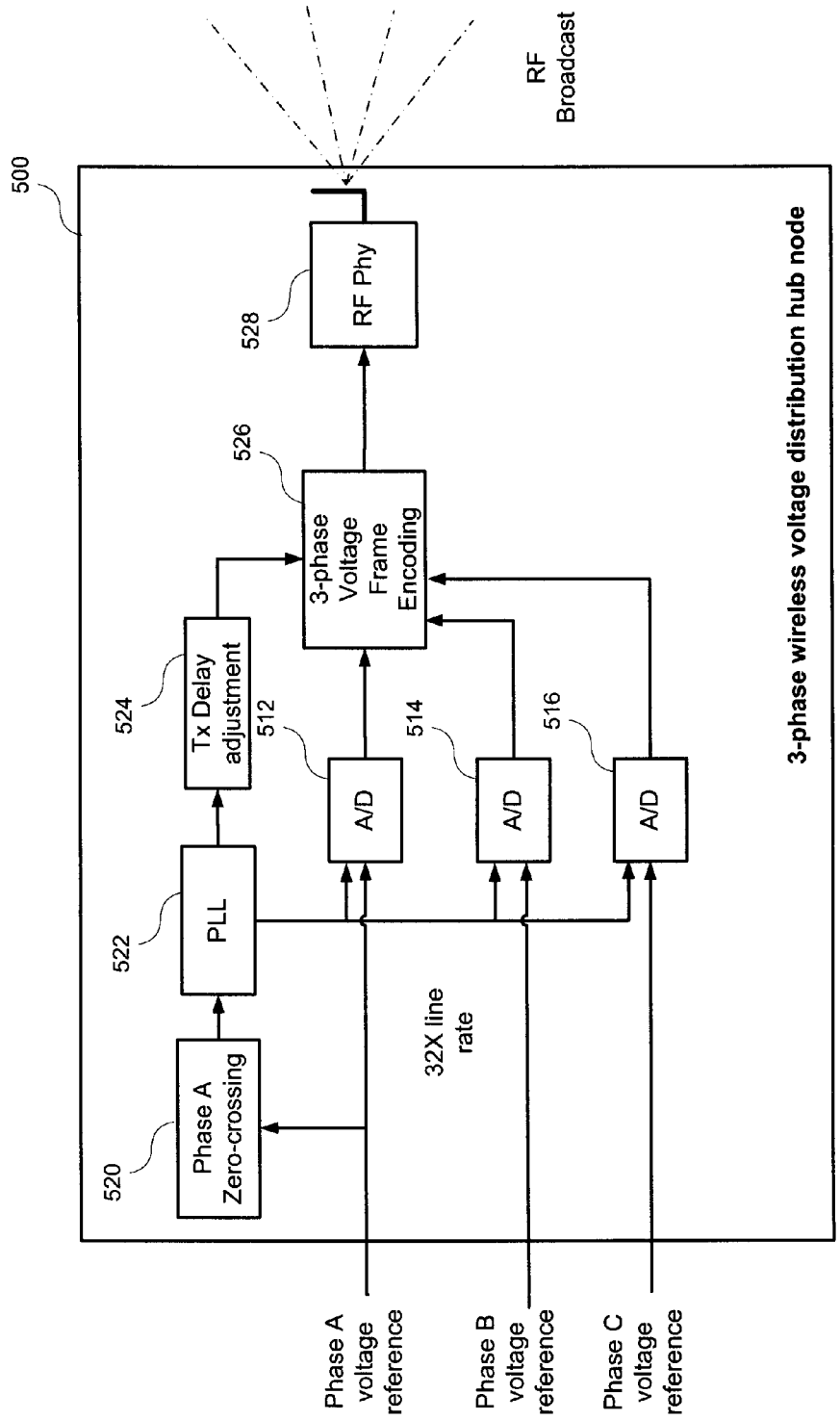
RF Broadcast
500
528
RF Phy
526
3-phase Voltage Frame Encoding
524
Tx Delay adjustment
512
A/D
514
A/D
516
A/D
522
PLL
520
Phase A Zero-crossing
32X line rate
3-phase wireless voltage distribution hub node
Phase A voltage reference
Phase B voltage reference
Phase C voltage reference

Figure 5

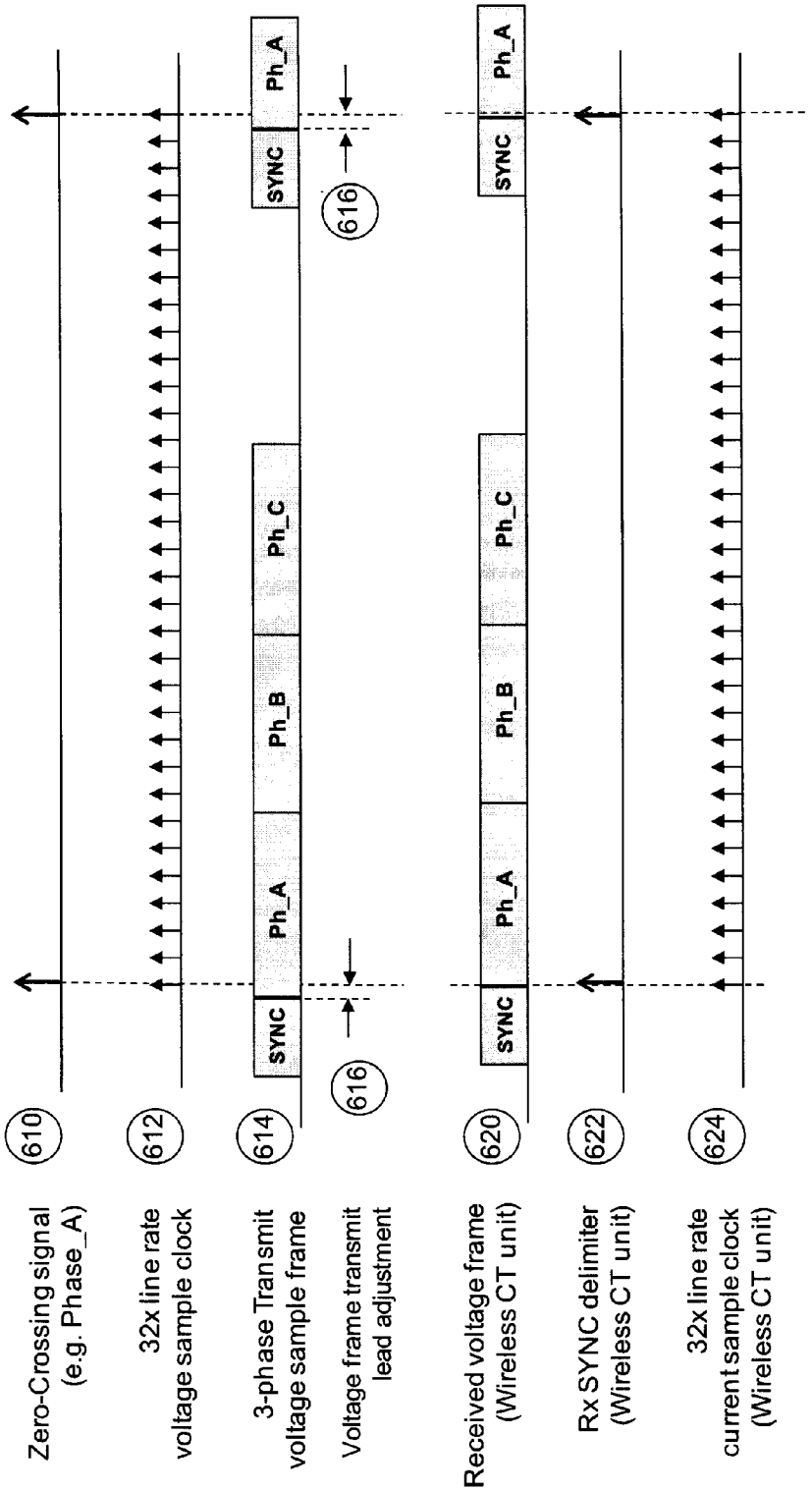
610
612
614
616
620
622
624
Zero-Crossing signal (e.g. Phase_A)
32x line rate voltage sample clock
3-phase Transmit voltage sample frame
Voltage frame transmit lead adjustment
Received voltage frame (Wireless CT unit)
Rx SYNC delimiter (Wireless CT unit)
32x line rate current sample clock (Wireless CT unit)
SYNC
Ph_A
Ph_B
Ph_C

Figure 6

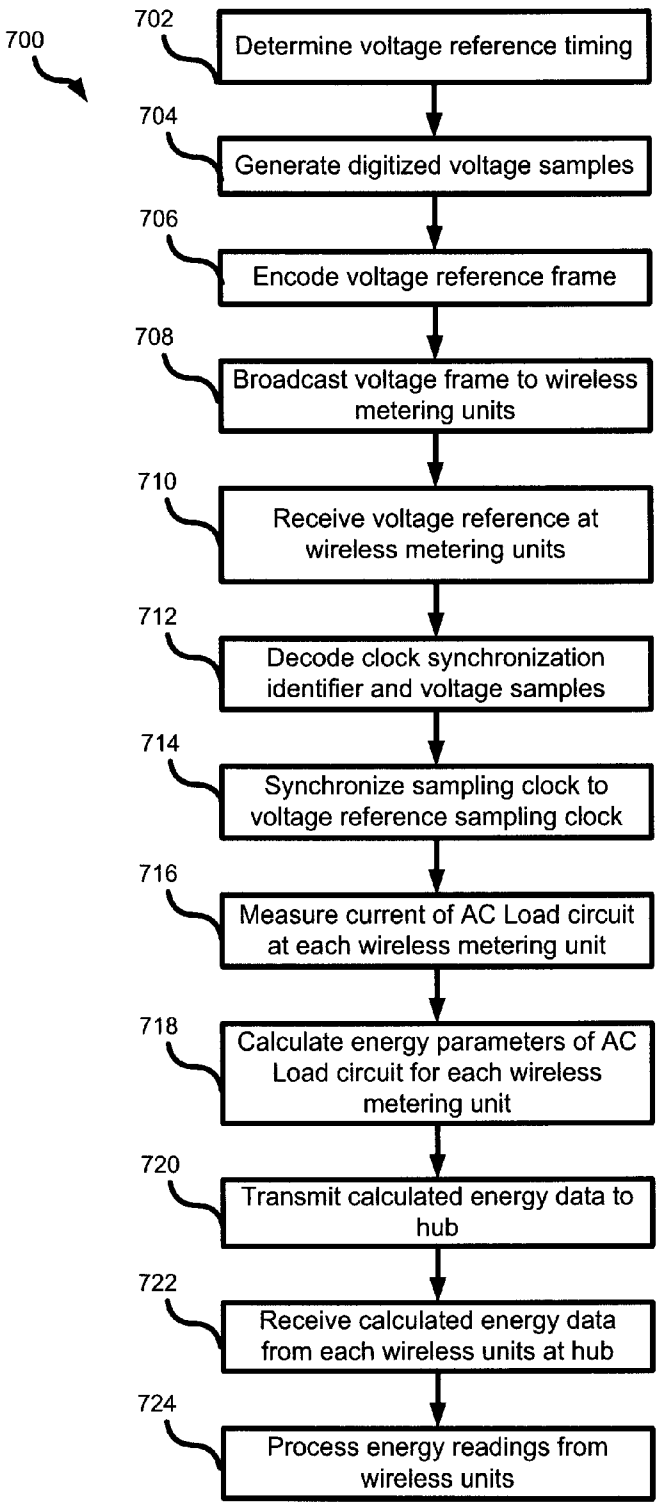
700
702
Determine voltage reference timing
704
Generate digitized voltage samples
706
Encode voltage reference frame
708
Broadcast voltage frame to wireless metering units
710
Receive voltage reference at wireless metering units
712
Decode clock synchronization identifier and voltage samples
714
Synchronize sampling clock to voltage reference sampling clock
716
Measure current of AC Load circuit at each wireless metering unit
718
Calculate energy parameters of AC Load circuit for each wireless metering unit
720
Transmit calculated energy data to hub
722
Receive calculated energy data from each wireless units at hub
724
Process energy readings from wireless units

Figure 7

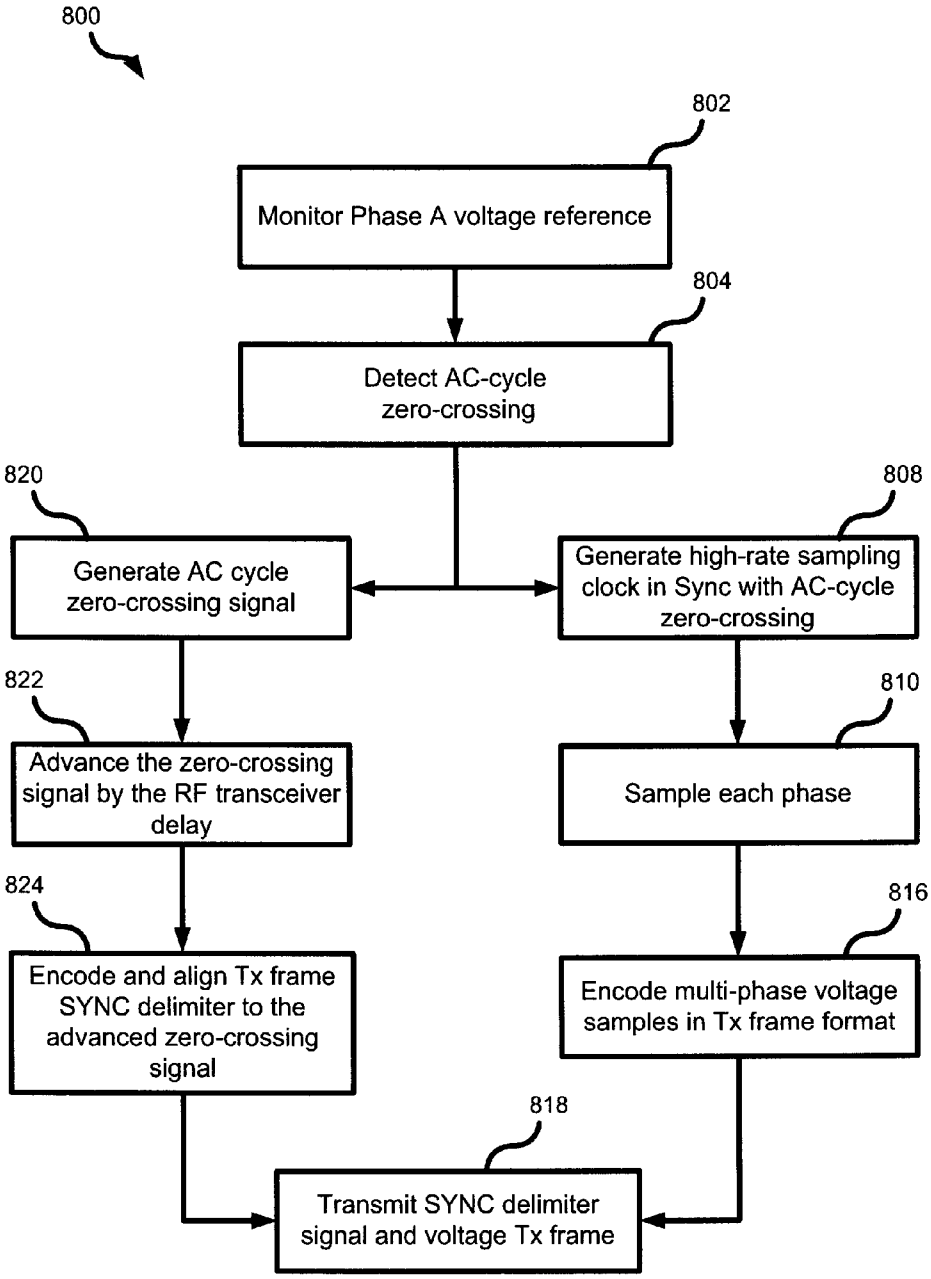
800
802
Monitor Phase A voltage reference
804
Detect AC-cycle zero-crossing
820
808
Generate AC cycle zero-crossing signal
Generate high-rate sampling clock in Sync with AC-cycle zero-crossing
822
810
Advance the zero-crossing signal by the RF transceiver delay
Sample each phase
824
816
Encode and align Tx frame SYNC delimiter to the advanced zero-crossing signal
Encode multi-phase voltage samples in Tx frame format
818
Transmit SYNC delimiter signal and voltage Tx frame

Figure 8

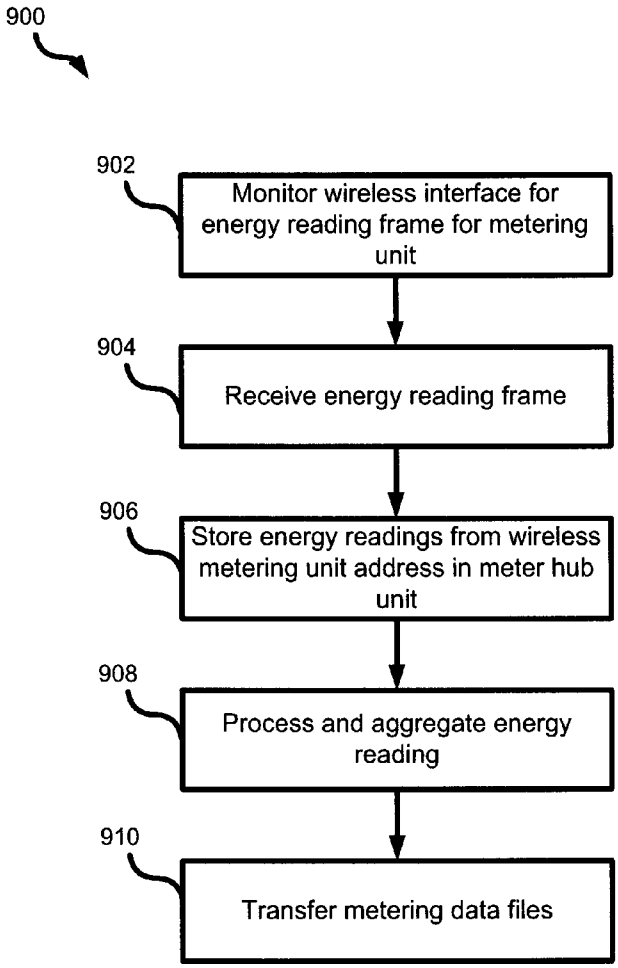
900
902
Monitor wireless interface for energy reading frame for metering unit
904
Receive energy reading frame
906
Store energy readings from wireless metering unit address in meter hub unit
908
Process and aggregate energy reading
910
Transfer metering data files

Figure 9

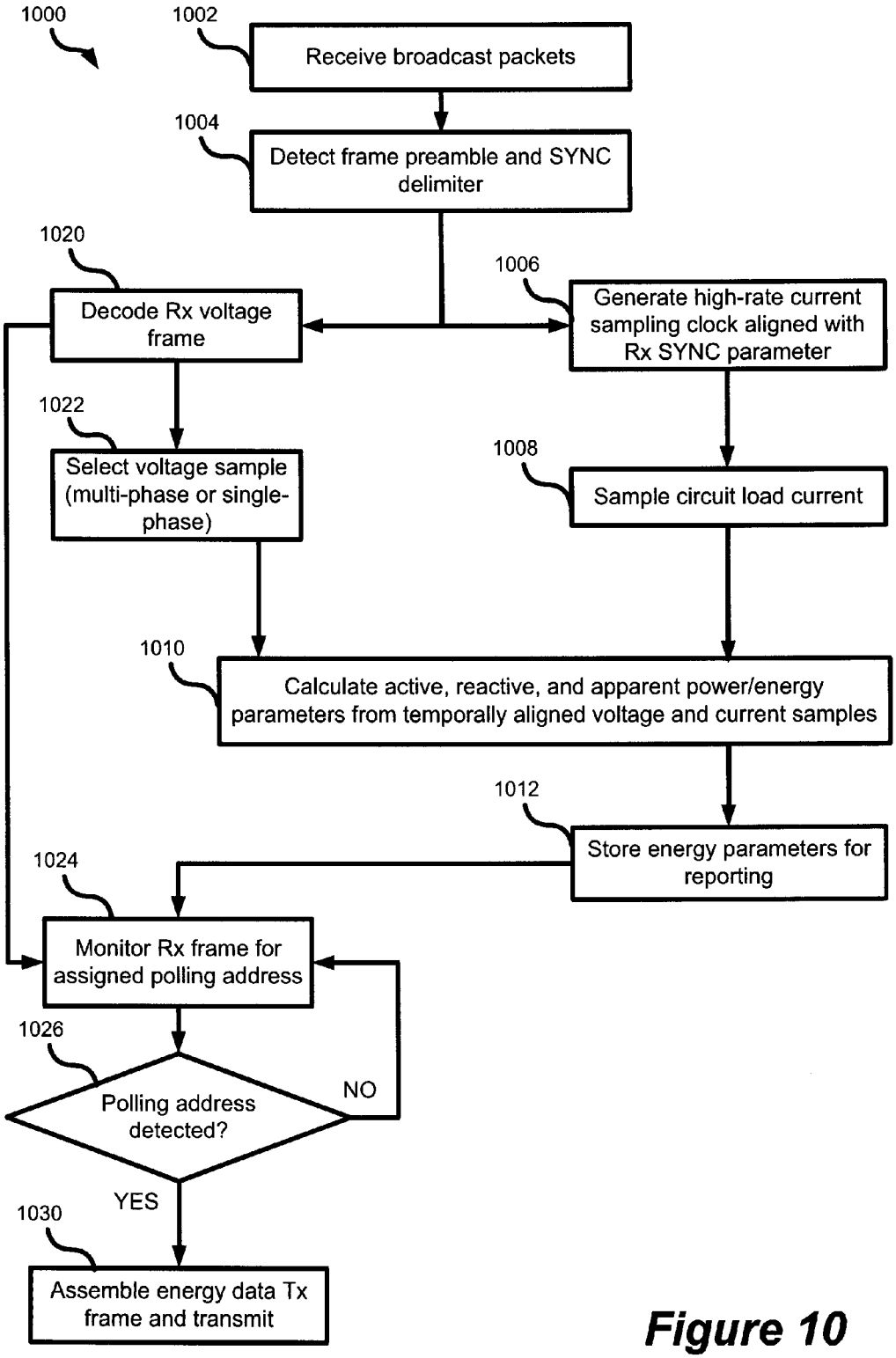
1000
1002
Receive broadcast packets
1004
Detect frame preamble and SYNC delimiter
1020
Decode Rx voltage frame
1006
Generate high-rate current sampling clock aligned with Rx SYNC parameter
1022
Select voltage sample (multi-phase or single-phase)
1008
Sample circuit load current
1010
Calculate active, reactive, and apparent power/energy parameters from temporally aligned voltage and current samples
1012
Store energy parameters for reporting
1024
Monitor Rx frame for assigned polling address
1026
Polling address detected?
NO
YES
1030
Assemble energy data Tx frame and transmit

Figure 10

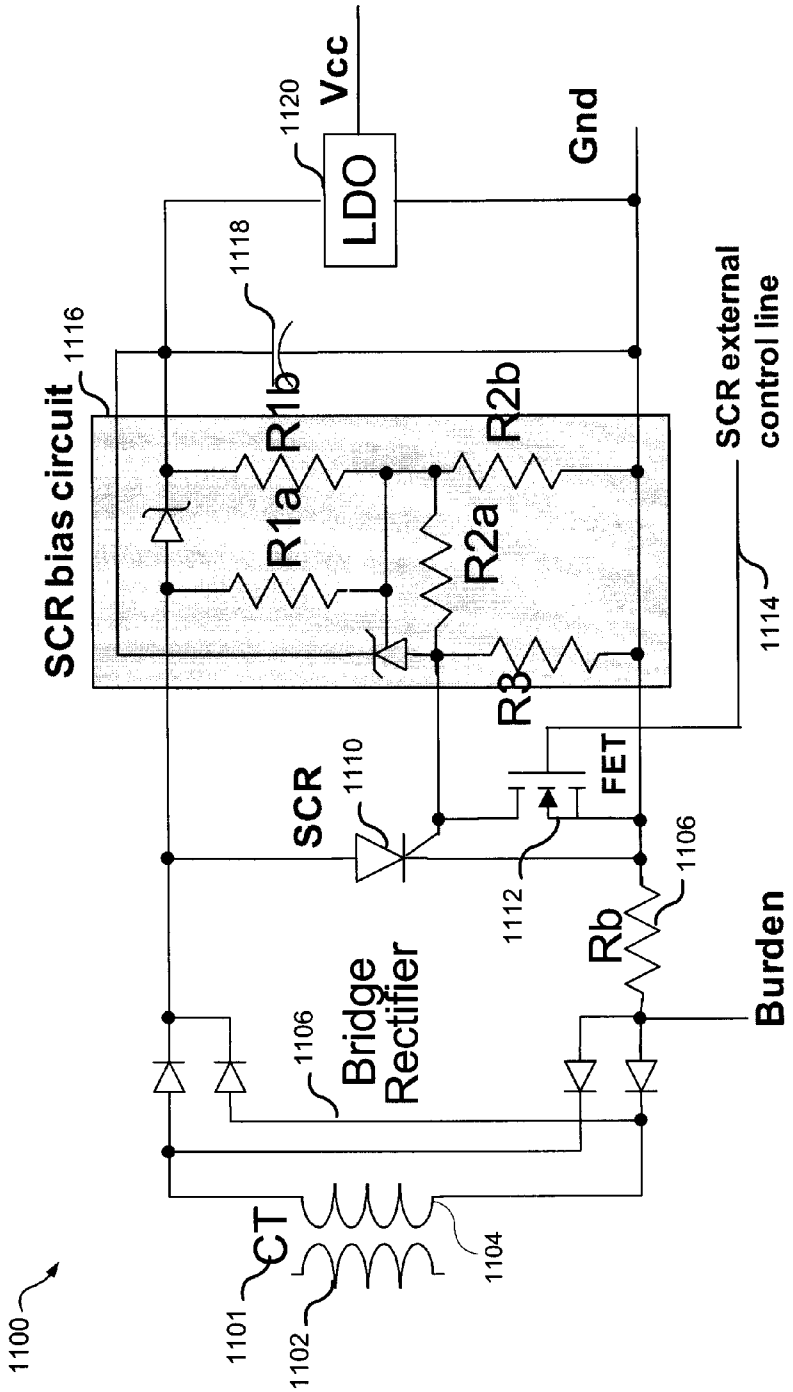
1100
1101
CT
1102
1104
1106
Bridge Rectifier
1106
Rb
1112
FET
SCR
1110
R3
R2a
R2b
R1a
R1b
1116
SCR bias circuit
1118
1120
LDO
Vcc
Gnd
SCR external control line
1114
Burden

Figure 11

INTERNATIONAL SEARCH REPORT

International application No.
PCT/CA2011/001359

A. CLASSIFICATION OF SUBJECT MATTER
IPC: ***G01R 21/133*** (2006.01) , ***G01R 21/06*** (2006.01) , ***G08C 17/00*** (2006.01)
According to International Patent Classification (IPC) or to both national classification and IPC

B. FIELDS SEARCHED

Minimum documentation searched (classification system followed by classification symbols)

G01R 21/133 (2006.01) , ***G01R 21/06*** (2006.01) , ***G08C 17/00*** (2006.01) in combination with keywords

Documentation searched other than minimum documentation to the extent that such documents are included in the fields searched

Electronic database(s) consulted during the international search (name of database(s) and, where practicable, search terms used)
Databases: EPOQUE (Epodoc), Canadian Patent Database, IEEE Xplore, Google Scholar
Keywords: sampling clock, reference clock, wireless metering, remote voltage sensing, synchronization, potential (voltage) transformer

C. DOCUMENTS CONSIDERED TO BE RELEVANT

Category*	Citation of document, with indication, where appropriate, of the relevant passages	Relevant to claim No.
X	HUAYUN et al., "The All-digital Electrical Energy Metering System Based on Optical Current and Voltage Transducer", Asia-Pacific Power and Energy Engineering Conference (APPEEC), 28 - 31 March 2010, p. 1 - 4. See abstract, section III.	1 - 53
X	MCGHEE et al., "Smart High Voltage Substation based on IEC 61850 Process Bus and IEEE 1588 Time Synchronization", First IEEE International Conference on Smart Grid Communications (SmartGridComm), 4 - 6 October 2010, p. 489 - 494. See whole document, in particular sections IV, VIII.	1 - 53
A	MOORE et al., "Practical Experience with IEEE 1588 High Precision Time Synchronization in Electrical Substation based on IEC 61850 Process Bus", IEEE Power and Energy Society General Meeting, 25 - 29 July 2010, p. 1 - 4. See whole document.	1 - 53
P,A	US 2011/0208364 A1 (DELOACH, JR) 25 August 2011 (25-08-2011) See whole document.	1 - 53

[X] Further documents are listed in the continuation of Box C. [X] See patent family annex.

* Special categories of cited documents :

"A" document defining the general state of the art which is not considered to be of particular relevance

"E" earlier application or patent but published on or after the international filing date

"L" document which may throw doubts on priority claim(s) or which is cited to establish the publication date of another citation or other special reason (as specified)

"O" document referring to an oral disclosure, use, exhibition or other means

"P" document published prior to the international filing date but later than the priority date claimed

"T" later document published after the international filing date or priority date and not in conflict with the application but cited to understand the principle or theory underlying the invention

"X" document of particular relevance; the claimed invention cannot be considered novel or cannot be considered to involve an inventive step when the document is taken alone

"Y" document of particular relevance; the claimed invention cannot be considered to involve an inventive step when the document is combined with one or more other such documents, such combination being obvious to a person skilled in the art

"&" document member of the same patent family

Date of the actual completion of the international search	Date of mailing of the international search report
8 March 2012 (08-03-2012)	16 March 2012 (16-03-2012)

Name and mailing address of the ISA/CA	Authorized officer
Canadian Intellectual Property Office Place du Portage I, C114 - 1st Floor, Box PCT 50 Victoria Street Gatineau, Quebec K1A 0C9 Facsimile No.: 001-819-953-2476	Sanja Denic (819) 994-1712

C (Continuation). DOCUMENTS CONSIDERED TO BE RELEVANT

Category*	Citation of document, with indication, where appropriate, of the relevant passages	Relevant to claim No.
A	ZHENG et al., "Design and Implementation of Remote Meter Reading System", 2nd International Conference on Software Technology and Engineering (ICSTE), 3 - 5 October 2010, p. V2-247 - V2-250. See whole document.	1 - 53
A	WO2007062232 A2 (SWARZTRAUBER et al.) 31 May 2007 (31-05-2007). See whole document.	1 - 53

INTERNATIONAL SEARCH REPORT
Information on patent family members

International application No.
PCT/CA2011/001359

Patent Document Cited in Search Report	Publication Date	Patent Family Member(s)	Publication Date
US2011208364A1	25 August 2011 (25-08-2011)	US2011208364A1	25 August 2011 (25-08-2011)
		WO2011103597A1	25 August 2011 (25-08-2011)
WO2007062232A2	31 May 2007 (31-05-2007)	AR057593A1	05 December 2007 (05-12-2007)
		AR057930A1	26 December 2007 (26-12-2007)
		AU4188701A	12 September 2001 (12-09-2001)
		BRPI0618932A2	27 September 2011 (27-09-2011)
		CA2401579A1	07 September 2001 (07-09-2001)
		CA2401579C	25 August 2009 (25-08-2009)
		CA2527068A1	15 May 2007 (15-05-2007)
		CA2567955A1	15 May 2007 (15-05-2007)
		CA2630862A1	31 May 2007 (31-05-2007)
		CA2661730A1	07 September 2001 (07-09-2001)
		CN101351803A	21 January 2009 (21-01-2009)
		CN101351803B	17 November 2010 (17-11-2010)
		CN101496301A	29 July 2009 (29-07-2009)
		EP1260090A1	27 November 2002 (27-11-2002)
		EP1260090A4	10 September 2003 (10-09-2003)
		EP1955161A2	13 August 2008 (13-08-2008)
		EP1960932A2	27 August 2008 (27-08-2008)
		IL151406A	24 July 2007 (24-07-2007)
		IL151406D0	10 April 2003 (10-04-2003)
		IL180435A	26 November 2008 (26-11-2008)
		IL191657D0	29 December 2008 (29-12-2008)
		US2003158677A1	21 August 2003 (21-08-2003)
		US6947854B2	20 September 2005 (20-09-2005)
		US2005137813A1	23 June 2005 (23-06-2005)
		US7054770B2	30 May 2006 (30-05-2006)
		US2006259254A1	16 November 2006 (16-11-2006)
		US2009099801A9	16 April 2009 (16-04-2009)
		US7539581B2	26 May 2009 (26-05-2009)
		US2007150237A1	28 June 2007 (28-06-2007)
		US7596459B2	29 September 2009 (29-09-2009)
		US2010213766A1	26 August 2010 (26-08-2010)
		US8026628B2	27 September 2011 (27-09-2011)
		US2010156664A1	24 June 2010 (24-06-2010)
		US8090549B2	03 January 2012 (03-01-2012)
		US2007194949A1	23 August 2007 (23-08-2007)
		US2009132096A1	21 May 2009 (21-05-2009)
		US2012019297A1	26 January 2012 (26-01-2012)
		US2012022814A1	26 January 2012 (26-01-2012)
		WO0165823A1	07 September 2001 (07-09-2001)
		WO0165823A9	06 February 2003 (06-02-2003)
		WO2007062232A3	31 December 2008 (31-12-2008)
		WO2007094837A2	23 August 2007 (23-08-2007)
		WO2007094837A3	02 May 2008 (02-05-2008)