April 29, 1941. H. J. NESS 2,240,313

METHOD OF MAKING COMPOSITE METAL

Filed March 1, 1938

Fig. 1

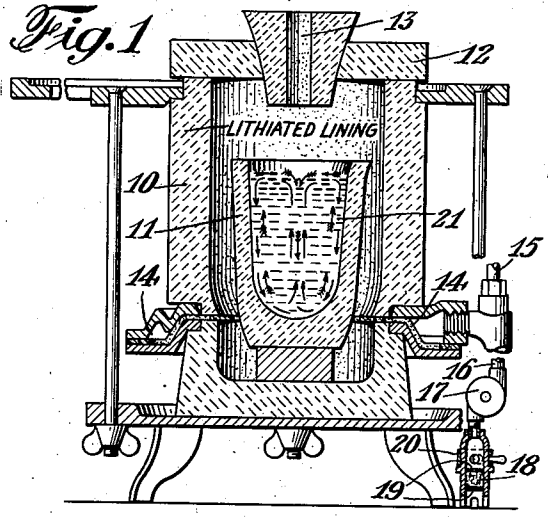

Fig. 2

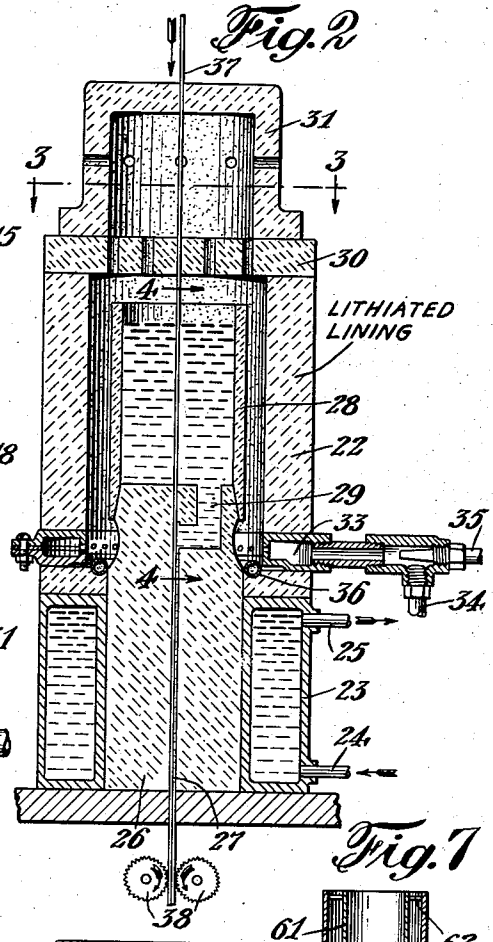

Fig. 4

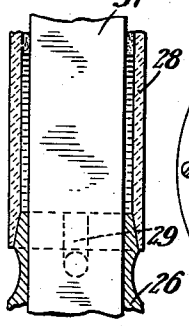

Fig. 3

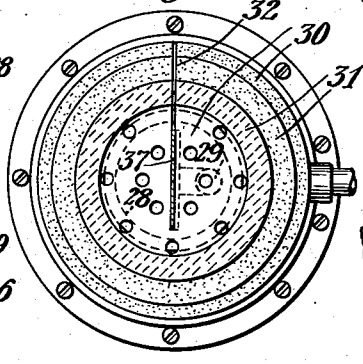

Fig. 7

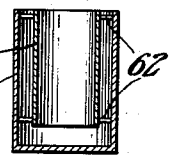

Fig. 6

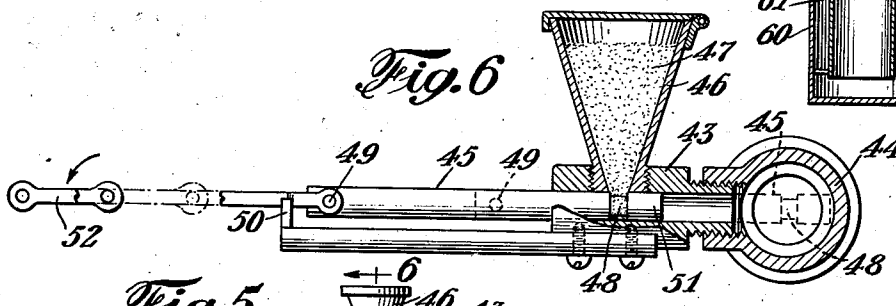

Fig. 5

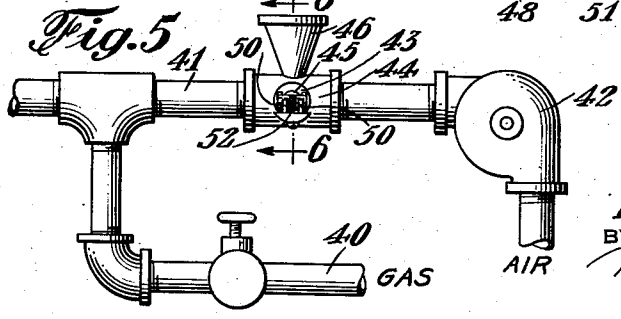

INVENTOR
Harold J. Ness
BY
M. J. Reynolds
ATTORNEY

Patented Apr. 29, 1941 2,240,313

UNITED STATES PATENT OFFICE

2,240,313

METHOD OF MAKING COMPOSITE METAL

Harold J. Ness, Bloomfield, N. J.

Application March 1, 1938, Serial No. 193,278

8 Claims. (Cl. 22—204)

This invention relates to alloys and to the method of producing the same. It is described hereinafter with reference to bearing metal alloys composed primarily of copper and lead but certain features of the process described are applicable to the production of alloys of other metals.

The present application is a continuation in part of my earlier applications Serial No. 27,712, filed June 21, 1935, and entitled "Alloys," Serial No. 56,567, filed December 28, 1935, and entitled "Alloy," and Serial No. 79,968, filed May 15, 1936, entitled "Metallurgical process".

In a copending application Serial No. 193,277, filed on even date herewith, which application also comprises a continuation in part of said above applications, I have described a method of producing copper-lead alloys by the use of lithium. The present invention contemplates the production of such alloy in accordance with the process of said copending application and the applying of said alloy to backing or supporting metals, such as steel.

One of the objects of the present invention is to eliminate the difficulties which have heretofore accompanied the production of copper-lead alloys and the application thereof to steel backing members.

Another object is to provide a method of producing alloys in which agitation of the molten mass is obtained without mechanical stirring up to the time of solidification thereof on the backing member.

Another object is to provide a process of coating a backing metal with a copper-lead alloy of better physical properties than heretofore obtainable on such backing metals.

Another object is to produce steel backed copper-lead alloys having lead contents up to 70%.

Another object is to produce an intimate bond between a supporting metal and an oxygen free alloy of copper and lead.

Another object is to provide a novel and effective method of coating backing metals with copper, copper-lead alloy or other metals or alloys.

Another object is to clean said backing metal and/or to maintain the same in a clean and oxygen free condition prior to and up to the time of application of the copper-lead alloy or other metal thereto.

Another object is to produce an alloy bond between the copper-lead alloy and the backing metal.

Another object is to provide means and a method for applying the copper-lead alloy or other metal to a backing member in the form of a continuous strip.

Another object is to provide a method and apparatus for coating backing metal with a copper-lead alloy or other metal in a non-oxidizing atmosphere.

Another object is to produce an oxygen free steel backed copper-lead alloy.

Other objects and advantages will hereinafter appear.

The present invention is based, in part, upon the discovery that when lithium is introduced into certain alloys, as for example, a copper-lead alloy, and precautions are observed to maintain some lithium in the alloy, a natural circulation or agitation of the molten mass occurs which enhances the intimate mixing of the alloying ingredients and that such agitation or automatic stirring action continues after it has once started, until actual solidification of the alloy upon cooling. As a consequence, no opportunity is afforded for the ingredients to segregate. Moreover, the agitation is very rapid, apparently occurring simultaneously throughout the entire molten mass so that a thorough stirring of the molten mass results and, upon solidification thereof, the ingredients of the alloy are retained in an intimate, uniform and finely subdivided form.

The lithium, when maintained in a small proportion in the copper-lead mixture by regulated conditions of operation, the nature of which will hereinafter appear, produces in the molten mass as the temperature thereof is raised to above a certain "critical" temperature, a violent agitation which appears to proceed upwardly from the center of the mass, thence radially outwardly toward the sides of the containing crucible and down the sides of the crucible. This circulatory agitation proceeds in the direction indicated as long as the temperature is retained above the "critical" temperature, and it is accompanied by considerable surface turbulence and a crackling and simmering sound. As the mass is permitted to cool down to the "critical" temperature, the turbulence and the rate of circulation decreases until the "critical" temperature is reached, at which point a reversal in the direction of the circulatory agitation occurs, the movement at the surface then proceeding from the sides of the crucible towards the center thereof at an increasing rate approximating that of the previous surface movement, and thence apparently axially downward into the mass. This latter movement

continues as the temperature is lowered below the "critical" temperature, and up to the point of solidification. Upon reheating, the movement of the mass continues in the radially inward direction at the surface until the "critical" temperature is again reached, at which point the direction of movement again changes to an outward radial movement at the surface.

The "critical" temperature varies with the proportion of the copper and lead in the mixture, lying approximately between the limits of 1700° and 1900° F. For a copper-lead-lithium alloy containing 35 per cent lead, it is believed to be about 1850° F. It is readily determined, for any particular mixture, from observation of the surface of the mass, since the transition from outward to inward movement of the mass at the surface thereof is pronounced and unmistakable.

The proportion of lithium required to effect this stirring or agitating action is very small, very definite and active agitation and uniform and fine dispersion of the lead having been obtained in the production of copper-lead alloys, which upon analysis showed as little as 0.00017% of lithium. Too great a percentage of lithium in the molten mass will, under certain conditions, react so violently as to cause spattering and for this reason it is preferable to maintain the lithium content of the charge not over about 1 per cent.

The lithium may be introduced into the mixture in a variety of ways, as for example, alloyed with the lead, alloyed with the copper, in a solid metallic state either alone or wrapped in other metals, such as copper, lead, nickel, etc., or as a vapor.

Various methods of adding the lithium to the charge are described in my aforesaid copending application but I prefer that it be added as a vapor, merely by creating a lithium vapor or atmosphere about the crucible, in any suitable manner, as for instance, by liberation of the lithium from the lining of the furnace, which has been previously treated therewith, as will hereinafter appear, or by introducing lithium metal or a compound thereof into the furnace atmosphere. In whatever manner the lithium is introduced into the charge, thereafter the mass is heated to above the "critical" temperature at which agitation starts.

The temperature at which the copper-lead alloy is applied to the backing metal should be above the so-called "critical" temperature. It may be applied as soon as the "critical" temperature is reached, although the quality and fineness of dispersion is not affected by continued heating above the "critical" temperature for a substantial period, i. e., from half an hour to an hour or more, or the temperature may be alternately raised and lowered above and below the "critical" temperature, thereby alternating the direction of agitation. This reversal of direction of agitation may be produced at either relatively short intervals or at substantially longer intervals, without materially affecting the resulting castings, as long as the coating is done above the "critical" temperature.

The molten mass, as it cools on the backing metal, continues its agitation, until stopped by solidification of the mass. There is, therefore, no opportunity for segregation of either the lead or copper to occur. The molten mass is very dense and therefore there is little or no shrinkage during solidification.

It has been found, however, that the mere addition of lithium to the charge in the proportions specified, does not result in the stirring action described nor in the production of a finely divided and uniformly distributed structure, but in addition it is necessary to prevent, at least in part, loss of lithium from the charge or to conduct the process under conditions which will supply additional lithium to the charge as the process continues. In practice it has been found that the linings of the furnaces used, which contain large proportions of silica, unless pretreated react with the lithium of the charge, as a result of which the lithium is very quickly and completely absorbed from the charge. In order to prevent the loss of the lithium from the charge in this manner and to provide continuously a lithium containing atmosphere about the crucible during heating of the charge, the lining of the furnace is treated with lithium vapor at a high temperature so that the lining will take up a portion of the lithium with which it is treated. The furnace linings thus treated will remain in a suitable lithiated condition for a considerable period, when not in use, and may be used for melting lithium containing copper alloys repeatedly without reconditioning. This conditioning of the furnace lining, it is believed, results in a saturation or near saturation of the lining by the lithium or a compound thereof whereby the lining upon subsequent melting of a charge, is not free to readily absorb additional lithium from the charge, but on the contrary liberates lithium to produce a lithium containing atmosphere over and possibly through the crucible, which atmosphere retards the escape of lithium from the charge. If desired, this lithium containing atmosphere may comprise the sole means of introducing the lithium into the charge, excellent results being obtainable by merely heating a pure copper and lead mixture in a furnace having a lithium treated lining. Sufficient lithium is absorbed into the charge, from the lithium containing atmosphere produced from heating of the lining, to cause pronounced agitation of the molten mass and a fine and uniform distribution of the lead in the copper or of the copper in the lead, as desired, upon casting.

The amount of lead which may be combined with copper while one of the metals is retained in a uniformly dispersed and finely divided state in the other may vary up to about 70% lead. When copper, lead and lithium alone are employed or even if small amounts of such metals as tin, iron and silicon are added, the copper or copper and other alloying components, if present, form a continuous matrix or cellular network in which the lead is dispersed as discontinuous finely divided particles, firmly bonded to the copper, a condition which produces high tensile and compressive strength and resistance to pounding. The grain structure of the copper-lead alloys produced in accordance with the process herein described is entirely different from copper-lead alloys as heretofore produced, the latter comprising copper and lead in masses of heterogeneous sizes and shapes whereas the copper in the alloy of the present invention assumes the elongated grain structure of oxygen free copper with the lead finely divided and highly dispersed within the individual copper grains, each copper grain including a countless number of separate lead particles. The alloy being produced in a lithium containing atmosphere, it is completely oxygen free and has not only grain

formation but physical properties comparable to oxygen free copper.

The number of lead particles appearing in a cross section of the copper-lead alloy of the present invention is enormous and for an alloy containing 40% lead, it may vary from, say, 50,000 to several hundred thousand per square inch and the average size of a lead particle may be of the order of magnitude of 10^{-6} square inches or smaller although the present invention is not limited to such particle size or distribution range, the foregoing figures being given only by way of example. The tensile strength of a copper-lead alloy containing 65% copper and 35% lead is of the order of magnitude of 14,000 lbs. per square inch, the compressive strength of the same alloy being of the order of 48,000 lbs. per square inch and the elongation approximately 15%. The presence of lithium in the alloy in addition to its dispersing action, toughens and hardens both the copper and lead of the alloy and increases their tensile strength, thereby further enhancing the physical properties of the alloy. Moreover, due to the encasement of the individual lead particles within the copper grains, the lead will not sweat out under operating conditions and temperatures, a feature which is not present in copper-lead alloys of the prior art. The addition of iron, tin and/or silicon in small percentages serves to harden the alloy, as set forth in detail in my said copending application.

One feature of the alloy of this invention is its capability of being remelted and recast without danger of segregation since a remelt thereof when conducted under the same controlled condition as an original melt evidences the same agitating effect as an original melt. Since remelting results in a continued internal working of the mass, it is possible to remelt and recast worn out bearings or to cast the original melts into ingots for subsequent recasting. The copper-lead alloy may be cast onto supporting or backing metal, such as steel, for such uses as bearings, brake-linings, clutch surfaces, piston surfaces, etc.

In order that the invention may be more clearly understood reference will now be had to the accompanying drawing, in which:

Fig. 1 is a vertical section of a gas fired furnace suitable for the production of copper-lead-lithium alloy;

Fig. 2 is a vertical section of a furnace and die for the coating of backing strips with a copper-lead-lithium alloy;

Fig. 3 is a sectional view on the line 3—3 of Fig. 2;

Fig. 4 is a sectional view on the line 4—4 of Fig. 2;

Fig. 5 shows means for introducing lithium compounds into the furnace of Fig. 1;

Fig. 6 is a vertical sectional view of the mechanism of Fig. 5, taken on the line 6—6 of Fig. 5; and

Fig. 7 is a sectional view of a shell to be coated with the copper-lead alloy.

Referring to Fig. 1, I have shown a gas fired furnace of conventional construction having a refractory lining 10 within which is contained a crucible 11, which may be of graphite, preferably lined with a refractory cement such as silimanite to prevent reaction of the lithium therewith. A refractory cover plate 12 having a suitable gas vent 13 is provided. Gas and air are admitted through a burner ring 14 surrounding the furnace, the gas being supplied through a conduit 15 and the air through a conduit 16. A blower 17, shown diagrammatically, and suitable valves (not shown) control the amount of air and gas supplied. In order to assist in maintaining an adequate supply of lithium vapor in the furnace above and around the crucible, the incoming air is caused to flow through a chamber 18 containing solid lithium particles or a powdered compound of lithium, contained between metal screens 19. A by-pass sleeve 20 permits air to be introduced independently of the lithium chamber 18, if desired. Sufficient lithium either in elemental or compound form is carried into the furnace with the air and vaporized therein, to produce a strong lithium spectral line when the gases escaping from the furnace are viewed with a spectroscope, thus denoting the presence of lithium in the furnace gases in an elemental form and in an ionized condition. Experimental data indicates that the presence of lithium in the elemental form is due, at least in part, to the reducing action of carbon monoxide gas in the furnace on lithium oxide, under the conditions prevailing in the furnace. A furnace lining which has been found suitable consists of silica 65%, alumina 25%, and the remainder ignition loss, i. e., moisture and other volatile material, and small percentages of iron, titanium, lime and magnesia.

The lining is treated by heating lithium in the furnace for a substantial period at a temperature sufficient to cause formation of a strong lithium vapor in the furnace as previously described. The lithium for treating the lining may be introduced into the furnace, as a charge, through the top thereof, although sufficient lithium can be carried into the furnace with the air flowing through the chamber 18, to effectively treat the lining. The sufficiency of the amount of lithium or lithium compound taken up by the lining can be determined by heating a charge of copper and lead therein. If upon heating of such a charge to a temperature of from about 1700 to 1900° F., an agitation of the mass occurs the lining is sufficiently treated for a successful carrying out of the present process. If no agitation occurs, it is necessary to retreat the furnace lining in the same manner. The treatment can also be effected by applying to the lining a compound of lithium, such as lithium chloride. The compound may be applied as a water solution or suspended or dissolved in other volatile vehicles, as fully set forth in my copending application Serial No. 112,988, filed November 27, 1936, and entitled "Furnaces."

The direction of the agitation of a nickel free molten alloy in the crucible is indicated by arrows in Fig. 1, the plain arrows indicating the apparent direction of the agitation when the charge 21 is heated to above the "critical" temperature, and the feathered arrows indicating the direction of agitation when the charge is permitted to cool below the "critical" temperature. With nickel added to the charge in amounts up to the order of magnitude of 9%, the direction of agitation appears always to be that shown by the plain arrows.

In the process of producing copper-lead-lithium alloys in which the lithium is introduced into the furnace atmosphere from the lining of the furnace, it is desirable to replace or add to the lithium given off by the walls, by permitting a small amount thereof to be carried in by the air flowing through the lithium containing chamber 18, although this is not necessary

since repeated heats can be made with a single treatment of the furnace lining.

As previously stated, the charge is heated in the lithium vapor containing atmosphere until circulation occurs in the direction of the plain arrows, after which it may be poured from the crucible 11 into a holding furnace such as shown in Fig. 2. This furnace comprises a lining 22 similar to the lining 18 of the melting furnace, which has also been treated with lithium. The lining 22 rests upon a water jacket 23 having a water inlet 24 and an outlet 25. Extending downwardly through the lower portion of the furnace and the water jacket 23 is a cylindrical die block 26 of refractory material having a rectangular opening 27 extending therethrough. A graphite receptacle 28 preferably having a lining of sillimanite or other refractory cement resistant to the disintegrating effect of lithium, extends upwardly from the die block, in which receptacle the molten metal is contained. A passageway 29 extends downwardly from the receptacle 28 to the slot 27. An apertured plate 30 closes the furnace and has resting thereon an apertured dome 31. The plate 30 and dome 31 are slotted in from one side, as indicated at 32 in Fig. 3. A burner ring 33 has air inlets 34 and 35 for the admission of gas and air to maintain the alloy in the receptacle 28 in a molten state. Lithium or a compound thereof may be contained in the air inlet 35, if desired, in the same manner as shown at 18 in Fig. 1, but as an alternative, I have provided a refractory tube 36 in the base of the furnace which is packed with lithium and which serves to liberate lithium vapor slowly throughout the coating process.

The strip 37 to be coated is passed downwardly through the slots 32 in the dome 31 and plate 30, thence through the receptacle 28 and die block 26, being drawn slowly through the molten alloy by a pair of feed rollers 38. The slot 27 in the die block, below the passageway 29, is somewhat wider than the strip 37, thereby permitting the alloy to flow from the passageway 29 and into the die block slot in contact with one face of the strip 37. The cooling jacket 23 causes the alloy to solidify as a coating on the strip.

The lithium vapor generated or released by the furnace lining passes over the receptacle 28, permitting an absorption of lithium into the charge, thereby to maintain the agitation of the mass and consequent high quality of the alloy coating. The lithium vapor also passes, with the furnace gases, through the apertured plate 30 and dome 31 in contact with the upper portion of the strip 37, and due to its reducing action, prevents oxidation of the surface of the heated strip prior to its passage into the molten mass. Consequently, due to the extremely clean surface thus produced on the strip and the freedom of the alloy itself from impurities, due to the cleanup effect of the lithium on the molten alloy, the coating material forms an alloy bond with the strip as it solidifies thereon. The coating has the pliable and malleable characteristics of copper combined with the bearing characteristics of lead and the coated strips may be stamped, bent, machined and otherwise worked into any desired form.

As previously stated, the composition of the copper and lead content of the alloy may vary within wide limits while maintaining the advantages of fine structure and uniform dispersion. The relative amounts of lead and copper will be varied in accordance with the service to be performed by the alloy. For heavy work, as in railroad rolling stock, a bearing rich in copper is preferred, as for instance, an alloy containing in the original melt, lead 15%, lithium 0.01 to 0.1% and the remainder copper.

A still harder bearing metal alloy may consist, in the original melt, of lead 10%, tin 0.2 to 2.0%, lithium 0.1% and the remainder copper.

Iron may also be used to harden the alloy, as for instance, a composition consisting in the original melt of lead 30%, iron 0.5%, lithium 0.1% and the remainder copper.

A good bearing metal for general use may consist of an alloy having in the original melt lead 30%, lithium 0.15% and the remainder copper.

For high speed applications, an alloy of greater antiscoring properties is required, as for instance, one containing 50% or more of lead, such as shown in Fig. 6.

Finished alloys containing as low as 0.00017% of lithium have shown pronounced agitation in the furnace and extremely fine subdivision and uniform dispersion of the lead in the copper upon casting. Analysis of the lithium content of a number of very satisfactory copper-lead-lithium alloys, by the spectroscopic method, the proportions of lithium frequently being too small for accurate determination by ordinary chemical analysis methods, is given below, to indicate the range of lithium to be expected in such alloys.

	Lead	Lithium
	Percent	*Percent*
A	30	0.0033
B	30	0.0007
C	29.5	0.0002
D	16.25	0.00033
E	About 30	0.00017

In place of introducing metallic lithium into the furnaces of Figs. 1 and 2, a compound thereof, such as the chloride, fluoride, hydroxide, oxide, or carbonate of lithium, or lithium containing ores such as spodumene or amblygonite, or mixtures thereof, may be used. The lithiated atmosphere may be provided in a gas fired furnace, for instance, by introducing a small quantity of a compound of lithium in powdered form, into the air or gas stream leading into the furnace or it may be injected or blown directly into the furnace through an aperture provided in one of the walls thereof. An apparatus for introducing the powdered lithium compounds directly into the furnace or into the air or gas conduit extending thereinto is fully disclosed in my copending application Serial No. 143,410, filed May 19, 1937, and entitled "Injecting apparatus." In an oil fired furnace the lithium compounds may be added directly to the oil, either as an oil soluble compound or in colloidal suspension. A process of treating fuel oil with lithium compounds is disclosed in my copending application Serial No. 154,203, filed July 17, 1937, and entitled "Promotion of combustion." In the case of electric furnaces the lithium compounds may be mixed with powdered carbon, such as graphite, and the mixture blown in a fine spray into the furnace in the manner set forth in my copending application Serial No. 143,411, filed May 19, 1937, and entitled "Metallurgical process."

The amount of lithium compound required to

produce the requisite condition of the furnace atmosphere is very small but is not critical and may be readily determined by experiment for any particular furnace. The furnace should be operated on the reducing side so that the furnace gases will contain a small percentage of carbon monoxide, the purpose of which will hereinafter appear. The desired rate or frequency of introduction of the lithium compound may be determined by spectroscopic examination of the gases escaping from the furnace.

It has been found when using a salt, such as lithium carbonate, introduced either continuously or at intervals throughout the process, that suitable results may be obtained in a new or unseasoned furnace, although with continued use a finer subdivision of one metal in the other is obtained.

While I prefer to employ the apparatus shown in my copending application Serial No. 143,410, referred to above, for introducing the powdered compounds into the furnace, I have, for ease of illustration, shown a simplified equipment for this purpose in Figs. 5 and 6 which will now be described.

Gas and air are admitted through the burner ring 14 surrounding the furnace, the gas being supplied through a conduit 40 and the air through a conduit 41. A blower 42, shown diagrammatically, and suitable valves (not shown) control the amount of air supplied.

Interposed in the air line 41 is means for introducing lithium compounds into the furnace. This means comprises a sleeve 43 threaded into a T 44 in the air line, a piston 45 slidable in the sleeve 43 and a hopper 46 for the lithium compound 47. The piston 45 is provided with an annular recess 48 adapted in the retracted position of the piston to be positioned beneath the hopper so as to receive a charge of the compound and to convey the same into the air line 41 when the piston is moved to the dotted line position. The compound thus introduced into the air stream is carried by this air into the furnace where it is highly heated. A cross bar 49 facilitates the manual reciprocating movement of the plunger 45 and a stop 50 limits the outer movement thereof. The end 51 of the piston fits closely in the bore of the cylinder and prevents the air under pressure in conduit 41 from blowing out through the hopper 46.

If desired, the plunger 45 may be reciprocated by a continuously operating crank 52, as shown in Fig. 6, so as to supply the lithium compound in definitely timed increments.

The desired frequency of operation of the plunger may be determined by spectroscopic inspection of the gases escaping from the vent 13, the lithium compound being supplied in such quantities and at such frequency as to maintain a strong lithium line in the spectrum when the furnace gases are viewed through a spectroscope.

The lithium compound so introduced is reduced to lithium metal in the furnace and produces in the copper lead charge a natural circulation or agitation of the molten mass in the same manner as when metallic lithium is introduced into the furnace.

The furnace linings, as stated, may be composed largely of silicon oxide, and if desired, the lithium compounds may be introduced into the furnace at spaced intervals since the linings serve as a storage and liberating medium whereby the desired atmosphere is maintained within the furnaces between the periods of introduction of the lithium compound. It is not necessary, however, that the lining be of the particular composition specified heretofore, since linings have been found satisfactory having a silica content of about 31% with approximately 62% alumina and the remainder mainly iron oxide and titanium oxide. Linings of magnesium oxide, aluminum oxide or chromium oxide may also be employed where high temperature operation is required. I prefer, however for economy, to construct the furnace lining of hard burned brick of low permeability and low porosity containing approximately 50% silica and 44% alumina, having a bulk density of about 1.2 oz. per cu. inch and a fusion point of about 3200° F. A cement for bonding the bricks, such as sillimanite, cyanite, andulusite, and mullite, analyzing as follows: silica 38.07%, alumina 56.63%, titanium 1.14%, iron oxide .73%, ignition loss 2.78% and the remainder moisture and other impurities, has been found suitable. This cement may also be used as a coating for the bricks after their assembly in the furnace. In general, cellular insulating brick or moulded or tamped-in linings have not been as satisfactory as linings built up from hard burned refractories, apparently due to the high permeability thereof or the reaction of the lithium or one of its compounds with the binder employed in such moulded linings. Linings, hearths and other refractory parts of the furnace consisting of or containing silicon carbide have been found to react detrimentally with the lithium of the atmosphere, due possibly to the nature of the binder commonly employed, causing breakdown of the refractory and to some extent, reduction in the efficiency of the lithium containing atmosphere for its intended purpose.

I prefer to introduce the lithium metal or compound into the furnaces mixed with the air or fuel since this insures that it will pass through the hottest part of the flame, which is at a temperature several hundred degrees above the average furnace temperature. Hence the lithium or its compound will be more readily converted into a vapor.

Under the conditions prevailing in the furnace the lithium compound, or at least a portion thereof, breaks down liberating free metallic lithium. The reaction is apparently first the formation of lithium oxide which reacts with carbon monoxide as follows:

$$2Li_2O+CO=Li_2CO_3+2Li$$

The lithium is thus freed to combine with the oxygen of the furnace or any oxygen that may be included in the metal being heated and the lithium carbonate of the above reaction is thermally broken down to lithium oxide liberating carbon dioxide. The reaction is then repeated with the lithium oxide so formed. As will be noted from the reactions set forth above each particle of lithium present in the furnace goes through the above cycle repeatedly, until it ultimately escapes with the furnace gases and it is necessary, therefore, to supply additional lithium or lithium compounds only to replace that so escaping and that absorbed by the material being heated or deposited on parts of the furnace.

As the steel or other backing metal 37 passes through the lithium atmosphere in the furnace 22, a layer or coating of a compound of lithium, mainly the oxide or carbonate, condenses thereon and forms a protective coating over the surface, which coating not only prevents oxidation

of the metal but actually reduces oxide formations thereon. It moreover protects the metal from any carburization, decarburization or other deleterious change in structure or composition. The lithium compound on the metal strip 37 also may act as a flux to assist in the bonding of the copper, copper alloy or other coating metal thereto. Whatever the action of the lithium atmosphere, it retains the parts free from oxidation, enhances the wetting of the strip by the molten metal and causes an actual alloy bond to occur between the backing strip and the coating metal.

While the invention has been described with particular reference to the application of copper-lead alloys to steel backing strips, for the production of bearings, it is to be understood that pure copper or alloys of copper other than copper and lead, as for instance brasses and bronzes, or aluminum and aluminum alloys, may be applied in the same manner to suitable supporting or backing metals in the lithium containing atmosphere. In fact any two metals or alloys may be joined which are capable of bonding with each other when the less refractory thereof is in a fused state and oxygen free and the surface of the solid and more refractory metal is free from oxide formations.

In the case of copper or copper alloys, the copper actually penetrates into the steel backing member to a considerably greater depth, in the lithium containing atmosphere than can be obtained in hydrogen or other reducing gases, thus indicating extreme cleanliness of both the solid and the fused metal.

In place of coating a continuous strip of backing metal, the copper-lead alloy may be poured directly into steel shells of cylindrical or other desired shape. In such case the shells are preferably heated in a furnace having a lithiated or other non-oxidizing atmophere and the copper-lead alloy poured therein directly from the crucible 21. The shells may be double walled, as shown in Fig. 7, the inner and outer shells 60 and 61 being held in spaced relation by radial wires or spacers 62. The copper lead alloy is poured into the inner shell and permitted to rise between the shells, the inner core and inner shell 61 being subsequently turned out. By pouring in this manner, the alloy flows with less disturbance, between the inner and outer shells.

The lithium used in the alloys and in the process described was pure lithium such, for example, as that prepared by the Maywood Chemical Works of Maywood, N. J., but it is contemplated that less pure lithium or lithium alloyed with other permissible components of the alloy to be produced or compounds of lithium, the other components of which readily escape or are harmless, may be used.

The copper used has been oxygen free copper, known in the art as such, and the lead has been that known commercially as 99.9 plus per cent pure, but it is contemplated that less refined commercial grades of copper and lead are adapted for use in carrying out the invention.

It is to be understood that brasses or bronzes may be used in place of pure copper and that such elements as nickel, iron, tin, silicon and other suitable alloying elements, as previously indicated, may be included in minor amounts in the composition to produce desirable variations in the physical properties of the alloy and such alloys of copper are intended to be included under the term "copper," when used in the claims.

The term "alloy" is used throughout the specification and in the claims, in a broad sense, to include a solid solution, mechanical mixture or other form of combination of the various elements thereof.

It is to be understood that the particular examples given of copper-lead-lithium alloys and the procedure for applying the same to backing metals are to be considered in an illustrative sense and not as defining the limits of the invention.

What I claim is:

1. The method of forming anti-friction surfaces which comprises heating copper and lead together in the molten state in the presence of lithium vapor until agitation of the alloy occurs and applying to the article to be surfaced said molten alloy, to coat said article.

2. The method of coating metals with a copper-lead alloy which comprises heating the metal to be coated in an atmosphere containing lithium vapor and while subject to said atmosphere depositing a copper-lead-lithium alloy thereon.

3. The method of coating supporting metals with a copper-lead alloy comprising generating lithium vapor in a furnace, heating the copper and lead together in a molten state therein to produce agitation of the alloy, passing the supporting metal through said lithium vapor and depositing a coating of a copper-lead alloy thereon.

4. The method of making steel backed copper-lead bearings comprising heating copper and lead together in a molten state in the presence of lithium, heating said steel backing in a non-oxidizing atmosphere and casting said copper-lead alloy onto said steel backing.

5. The method of coating metals with copper and alloys of copper comprising heating said metal in a lithium containing atmosphere and while subject to said atmosphere casting said copper or copper alloy thereon.

6. The method of producing an alloy bond between copper or an alloy of copper and a more refractory backing metal comprising casting said copper or copper alloy onto said more refractory metal in an atmosphere containing lithium.

7. The method of coating an oxidizable metal with a lower melting point metal or alloy which comprises heating the metal to be coated and the coating metal or alloy, in the presence of a lithium vapor, above the melting point of the coating metal or alloy and casting said coating metal or alloy thereon.

8. The method of coating a metal with a lower melting point metal or alloy which comprises maintaining said coating metal or alloy in a molten condition in a heating chamber containing carbon monoxide, introducing a compound of lithium into said chamber in sufficient quantity to produce a lithium line in the spectrum of the gases in said chamber, passing the metal to be coated through a portion of said chamber and casting said coating metal or alloy thereon

HAROLD J. NESS.