June 12, 1951 A. F. BELL 2,556,251

CYLINDER DRIVE FOR BED AND CYLINDER PRINTING PRESSES

Filed Dec. 10, 1947 8 Sheets-Sheet 1

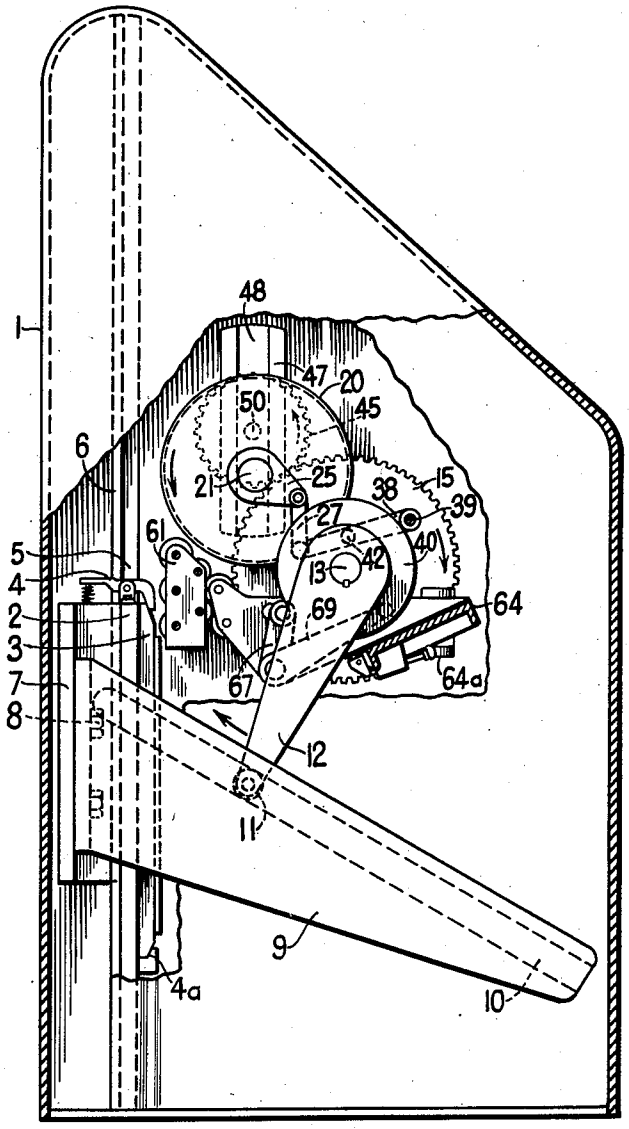

Fig. 1

INVENTOR.
Andrew F. Bell.
BY
Cabell, Mahoney & Miller
ATTORNEYS

June 12, 1951 A. F. BELL 2,556,251

CYLINDER DRIVE FOR BED AND CYLINDER PRINTING PRESSES

Filed Dec. 10, 1947 8 Sheets-Sheet 2

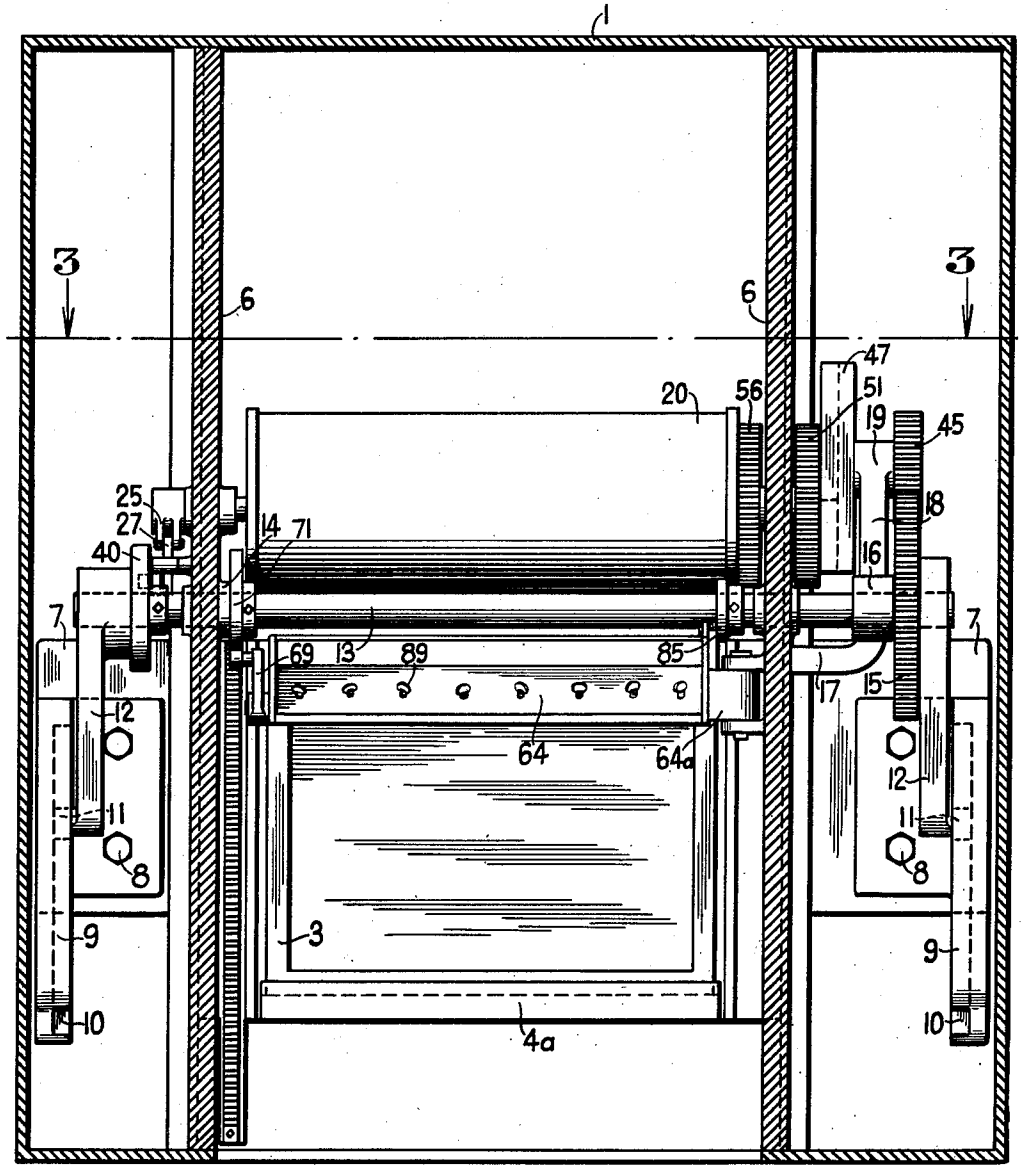

Fig. 2

INVENTOR.
Andrew F. Bell.

BY

Cushman, Darby & Cushman

ATTORNEYS

June 12, 1951 A. F. BELL 2,556,251

CYLINDER DRIVE FOR BED AND CYLINDER PRINTING PRESSES

Filed Dec. 10, 1947 8 Sheets-Sheet 3

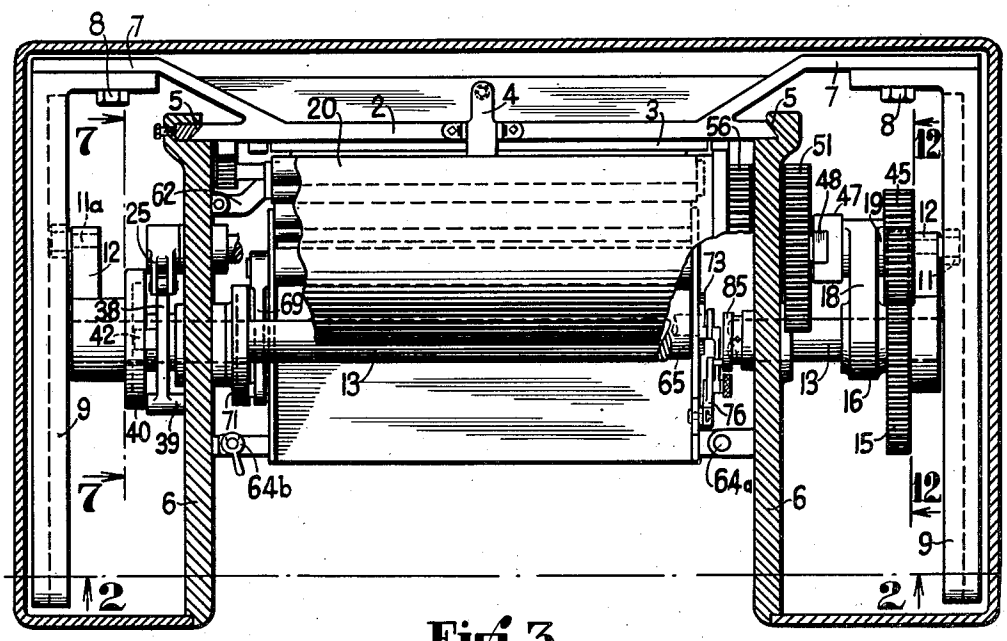

Fig. 3

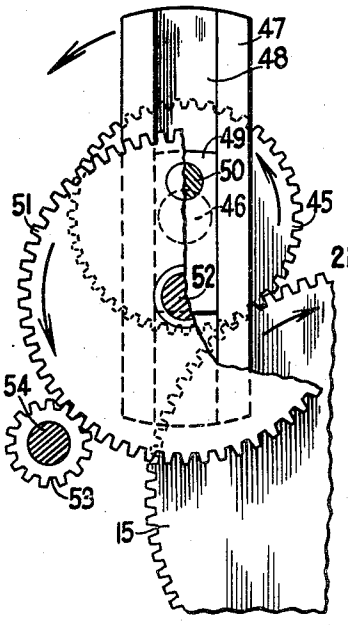

Fig. 4

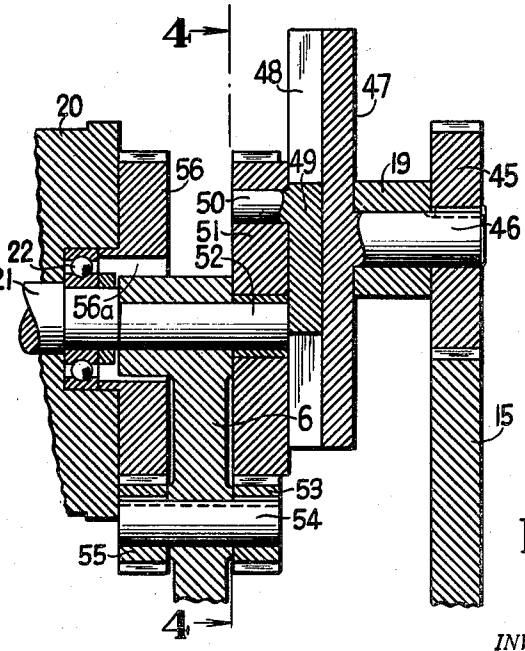

Fig. 5

INVENTOR.
Andrew F. Bell.
BY
Corbett, Mahoney & Miller
ATTORNEYS

June 12, 1951 A. F. BELL 2,556,251

CYLINDER DRIVE FOR BED AND CYLINDER PRINTING PRESSES

Filed Dec. 10, 1947 8 Sheets-Sheet 4

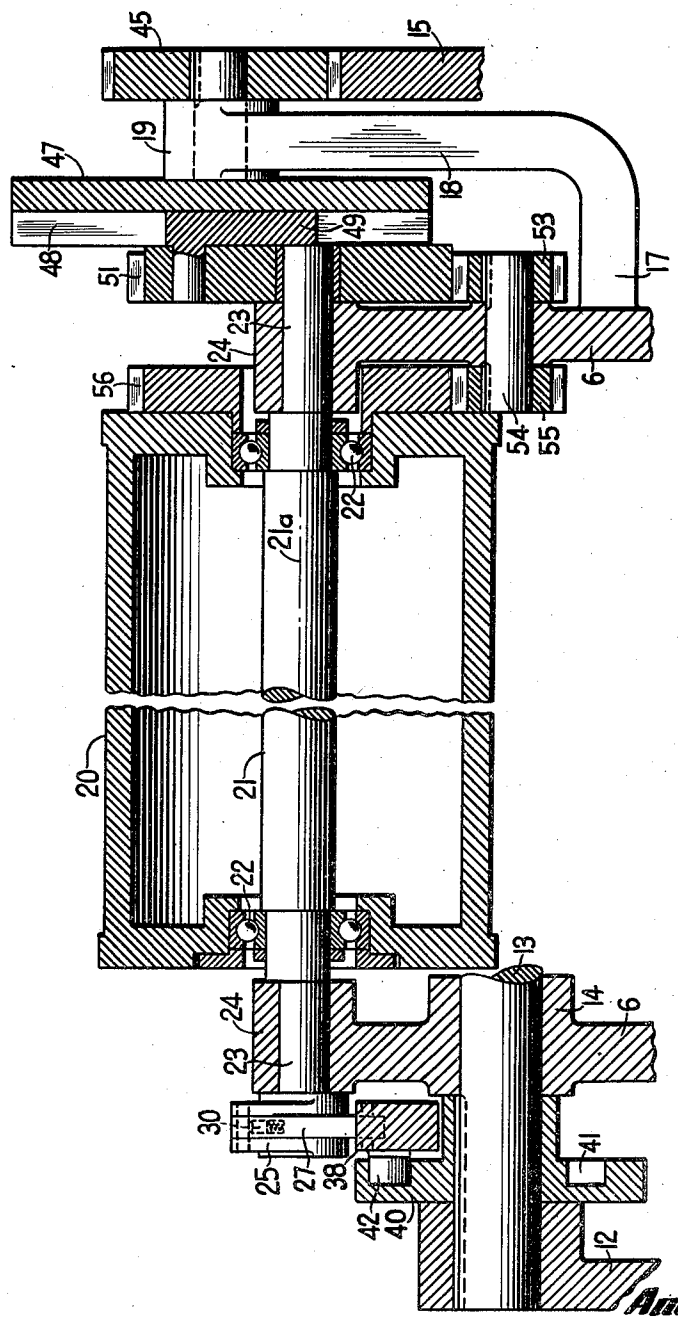

Fig. 6

INVENTOR.
Andrew F. Bell

BY

Cahill, Mahoney & Miller
ATTORNEYS

June 12, 1951 A. F. BELL 2,556,251

CYLINDER DRIVE FOR BED AND CYLINDER PRINTING PRESSES

Filed Dec. 10, 1947 8 Sheets-Sheet 5

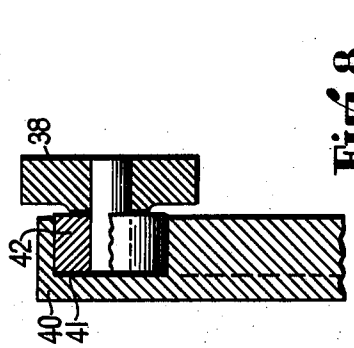

Fig. 8

Fig. 7

INVENTOR.
Andrew F. Bell.
BY
Cobb, Dunham & Miller
ATTORNEYS

June 12, 1951 A. F. BELL 2,556,251

CYLINDER DRIVE FOR BED AND CYLINDER PRINTING PRESSES

Filed Dec. 10, 1947 8 Sheets-Sheet 6

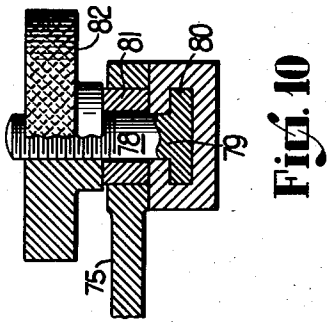

Fig. 10

Fig. 9

INVENTOR.
Andrew F. Bell.
BY
Cubell, Mahoney & Miller
ATTORNEYS

June 12, 1951 A. F. BELL 2,556,251

CYLINDER DRIVE FOR BED AND CYLINDER PRINTING PRESSES

Filed Dec. 10, 1947 8 Sheets-Sheet 7

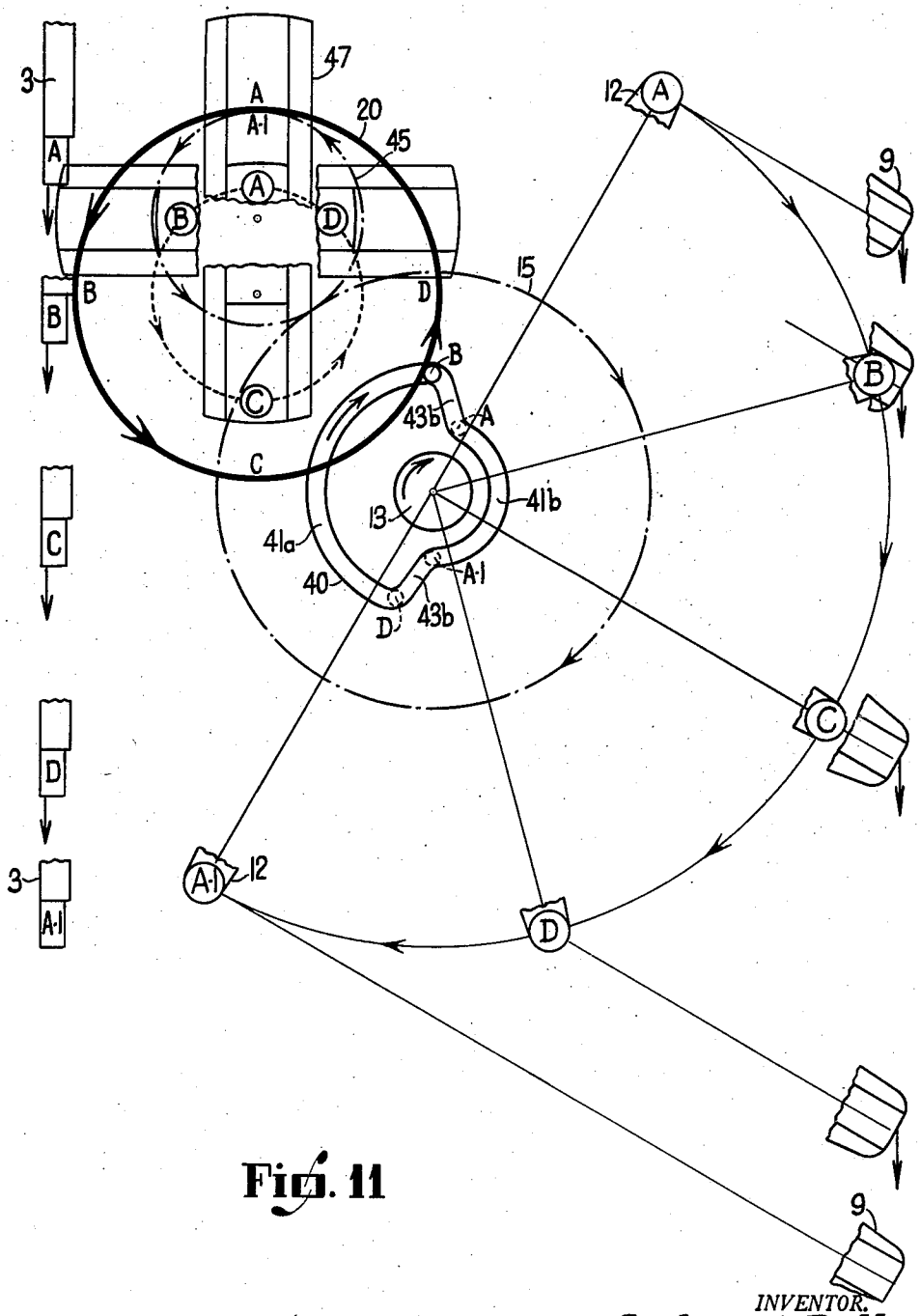

Fig. 11

INVENTOR.
Andrew F. Bell.
BY
Cahill, Mulvey & Miller
ATTORNEYS

June 12, 1951 A. F. BELL 2,556,251

CYLINDER DRIVE FOR BED AND CYLINDER PRINTING PRESSES

Filed Dec. 10, 1947 8 Sheets-Sheet 8

Fig. 12

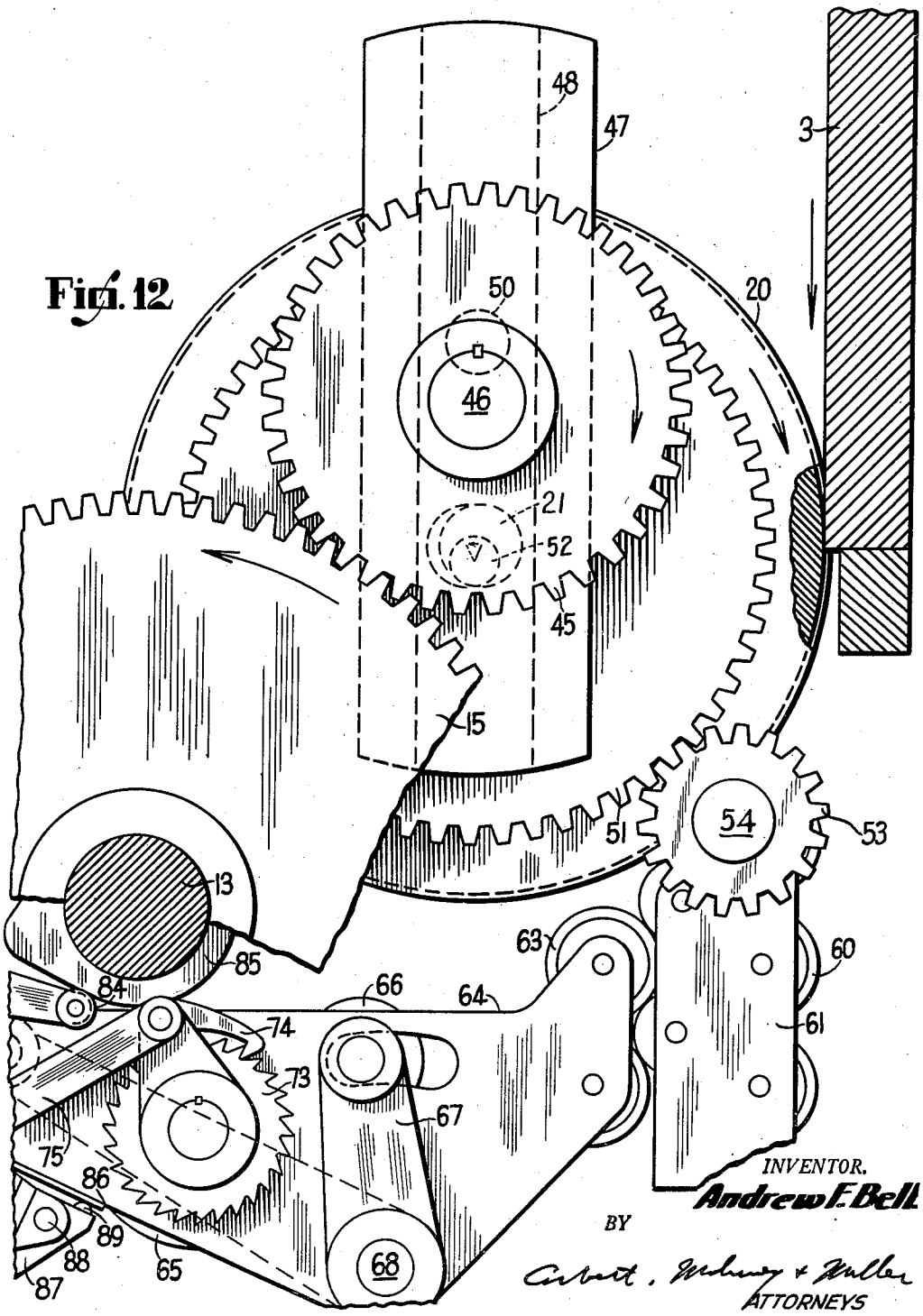

INVENTOR.
Andrew F. Bell
BY
Abbott, Mahoney & Huber
ATTORNEYS

Patented June 12, 1951 2,556,251

UNITED STATES PATENT OFFICE

2,556,251

CYLINDER DRIVE FOR BED AND CYLINDER PRINTING PRESSES

Andrew F. Bell, Marietta, Ohio, assignor to W. G. Montgomery, Marietta, Ohio

Application December 10, 1947, Serial No. 790,864

3 Claims. (Cl. 101—250)

1

My invention relates to a cylinder drive for bed and cylinder printing press. It is described and illustrated as being applied to a printing press of the reciprocating bed and rotating cylinder type but it is to be understood that my invention is not limited to printing presses but is applicable to other machines having similar cooperating units which it is desired to move in a similar manner.

In printing presses of this general type in the prior art, whether the press is of the horizontal or vertical type, a bed is provided for holding the type form and an impression cylinder is associated with the bed for cooperation with the form in the printing operation. The bed is flat or vertical, depending upon whether the press is of the horizontal or vertical type, and is reciprocated in a straight line while the cylinder is rotated continuously in one direction so as to cause the impression cylinder to roll over the form thereby resulting in the printing of a sheet gripped by grippers carried by the cylinder. It is necessary to synchronize accurately the reciprocating movement of the bed and the rotating movement of the cylinder so that at least during the actual printing operation, the surface of the cylinder and the contacting surface of the bed travel at the same linear speed. Furthermore, during the return or non-printing stroke of the bed, it is necessary to move the impression cylinder away from the bed so as to space the surface of the impression cylinder from the printing form. This latter movement must also be synchronized with the reciprocating movement of the bed.

My invention relates particularly to mechanism for reciprocating the bed, rotating the cylinder, and moving the cylinder into contact with and away from the type form carried by the bed. However, I have also made certain improvements in the fountain mechanism for supplying ink to the inking rollers for the impression cylinder.

One of the objects of my invention is to provide very simple mechanism for effectively reciprocating the bed of a printing press and for rotating the impression cylinder in proper timed relationship so that the cylinder will properly register with the type form on the bed during the printing operation.

Another object of my invention is to provide mechanism in association with the bed reciprocating and cylinder rotating mechanism for moving the cylinder towards and away from the bed so that it will be in contact with the type form carried by the bed during the printing stroke of the bed but will be spaced from the type form during the return stroke of the bed.

2

A further object of my invention is to control the reciprocating movement of the bed, the rotating movement of the impression cylinder, and the movement of such cylinder towards and away from the bed in such a manner that all of these movements are properly related and synchronized to result in the proper printing impressions even at high speed operation.

Another object of my invention is to provide mechanism for rotating the cylinder in the manner indicated which is of such a nature that it will not interfere with the movement of the cylinder towards and away from the bed as indicated.

Still another object of my invention is to provide an improved fountain roller and associated mechanism for supplying the ink to the inking rollers of the press.

Various other objects will be apparent.

My invention is described hereinafter and is illustrated in the drawings as being applied to a printing press of the vertical type where the bed is vertically disposed and reciprocates vertically. However, it is to be understood that I have disclosed this type of press for illustrative purposes only and that my invention is applicable also to horizontal presses and, in fact, is even applicable to machines designed for purposes other than printing which have units to be moved in a manner similar to the movement of the bed and the impression cylinder of a printing press.

According to my invention, the bed is mounted for straight line movement on a suitable frame. The bed is preferably reciprocated with simple harmonic motion by means of a constantly driven crank. This crank is provided on its end with a roller which operates in a slot formed in an arm or hanger which extends at a suitable angle from the bed. The crank is so related to the hanger and the hanger is so related to the bed that during each stroke of the bed, the speed of movement of the bed will gradually increase as the crank moves from its zero position to its ninety degree position and will gradually decrease as the crank moves from its ninety degree position to its one hundred and eighty degree position. Thus, during each stroke of the bed, the speed gradually increases from its starting position to a maximum and then gradually decreases as the bed moves towards the end of its stroke. I provide mechanism for causing the impression cylinder to move in synchronized relationship with the movement of the bed so that the impression cylinder will register properly with the type form on the bed during the printing operation.

The impression cylinder of the press will be in

cooperative relationship with the bed and will be mounted for rotation on the frame of the press with its axis transversely of the bed and with its axis parallel to the face of the bed.

The mechanism which I provide for rotating the cylinder will cause such cylinder to move at a variable speed also but this speed will be so related to the variable speed of movement of the bed that at least during a portion of each stroke of the bed, the linear speed of the surface of the cylinder will be identical with the linear speed of the surface of the type form carried by the bed. During this interval when the cylinder and bed are moving at the same speed, the printing operation is performed and, therefore, proper registration of the impression cylinder and type form results. The mechanism for rotating the cylinder at a variable speed but at a speed which is synchronized with the speed of movement of the bed during a portion of its stroke, includes a constantly rotating driving member which rotates about an axis parallel to but spaced from the axis of the cylinder. This driving member carries a block which is mounted slidably in a slot therein for movement radially relative to its axis of rotation. This block carries a pin which is disposed for rotation in a driven member at a point spaced from its axis of rotation. This driven member rotates the cylinder. This structure constitutes a variable speed drive of the crank type wherein the effective length of the crank arm varies during rotation. It will be understood that as the driving member rotates the driven member, the pin on the block carried by the driving member moves towards and away from the axis of the driving member and, therefore, varies the effective length of the crank arm which extends from the axis of the driving member to the axis of the pin. This variable crank driving mechanism is so related to the crank mechanism which moves the bed that during a portion of the stroke of the bed, the movement of the surface of the impression cylinder is at the same linear speed as the movement of the surface of the type form carried by the bed. During this interval of synchronized movement, the printing operation takes place.

It will be understood that it is necessary during the printing stroke of the bed for the paper carried by the impression cylinder to contact with the type form on the bed and that during the return stroke it is necessary for the cylinder to be out of contact with the type form. To provide for the necessary movement of the cylinder, away from the form during the return stroke, the cylinder is rotatably carried by a shaft which is provided with eccentric portions at its ends mounted in suitable bearings. The cylinder rotates on this shaft and I provide mechanism for oscillating this shaft so as to move the cylinder towards and away from the bed. This mechanism is actuated by a cam which is carried by the constantly rotating shaft that carries the crank which reciprocates the bed, in such a manner that during the printing stroke of the bed, the cylinder is moved into association with the bed and during the return stroke, the cylinder is moved away from the bed. The variable crank driving mechanism for the cylinder is so constructed and connected to the cylinder that it will permit the movement of the cylinder towards and away from the bed while the cylinder is rotating about its shaft. For this purpose, means is provided between the driven member of such variable crank mechanism and the cylinder which permits the slight rocking movement of the axis of the cylinder shaft around the axes of the shaft bearings, which results from oscillation of the shaft during movement of the cylinder, towards and away from the bed. This rocking movement does not interfere with the driving connection between the variable crank mechanism and the cylinder.

I also preferably provide novel means in association with the fountain roller of the inking mechanism for varying the amount of ink applied to the type form carried by the bed. This mechanism includes means for readily adjusting the stroke of the ratchet mechanism which rotates the fountain roller so as to readily vary the circumferential extent of the film of ink applied thereto on each stroke of the ratchet mechanism.

The preferred embodiment of my invention is illustrated in the accompanying drawings wherein similar characters of reference designate corresponding parts and wherein:

Figure 1 is a side elevational view, partly broken away, of a printing press of the vertical type in which my invention is incorporated.

Figure 2 is a vertical sectional view taken through the press substantially along line 2—2 of Figure 3.

Figure 3 is a horizontal sectional view through the press taken substantially along line 3—3 of Figure 2.

Figure 4 is a detailed view in elevation of the variable crank drive for the impression cylinder, taken substantially along line 4—4 of Figure 5.

Figure 5 is a detail in section taken through the end of the cylinder and associated parts and illustrating the variable crank drive.

Figure 6 is a sectional view taken through the impression cylinder and showing the mechanism associated with each end thereof.

Figure 7 is a diagrammatic view illustrating the movement of the cylinder towards and away from the bed and taken along line 7—7 of Figure 3.

Figure 8 is a transverse sectional view taken along line 8—8 of Figure 7.

Figure 9 is a detailed view of the fountain roller and associated fountain of the inking mechanism.

Figure 10 is a transverse sectional view taken substantially along line 10—10 of Figure 9.

Figure 11 is a diagrammatic view illustrating the relative positions of the bed moving crank, the cylinder driving mechanism and the cam for moving the cylinder towards and away from the bed.

Figure 12 is a view illustrating the cylinder drive and taken along line 12—12 of Figure 3.

With reference to the drawings, in Figure 1 I have shown, for example only, a printing press of a vertical type. The paper to be printed will be fed into the press in the usual manner at the front side thereof and the printed paper will be removed therefrom at the rear side thereof by the usual means. This feeding and removing mechanism is not illustrated in the drawings since my invention does not relate thereto.

As shown best in Figures 1 to 3, the press embodies a supporting frame enclosed within a suitable housing 1. Mounted within the housing 1 for vertical movement at the rear side of the press is the bed 2. This bed is adapted to support on its front surface the chase 3 which carries the type form. The chase may be removably attached to the bed by means of a socket 4a adjacent the lower end of the bed and by a latch 4 at the upper end of the bed. The side

edges of the bed are slidably fitted into vertically disposed guide slots 5 which are formed at the inner sides of the frame members 6 adjacent the rear edges thereof. The frame members 6 are disposed vertically within the housing and are parallel with each other extending from the front side of the housing 1 to points spaced slightly from the rear side of the housing. These frame members form a part of the main supporting frame of the press.

The bed 2 is provided with lateral extensions 7 at each side thereof which extend outwardly and laterally beyond the frame members 6 to points adjacent the sides of the housing 1. Rigidly secured to the inner or front surface of each of these extensions by bolts 8, or other suitable fastening means, is an arm or hanger 9. The arms or hangers 9 are of rugged construction and are firmly secured to the bed 2 since they will support the weight of such bed. These arms extend downwardly and forwardly at an angle relative to the vertical bed, as illustrated best in Figure 1, but they may be disposed at a right angle or any other suitable angle relative to the bed. By having the hanger 9 at an angle, as illustrated, maximum movement of bed 2 can be accomplished with a crank arm 12 of minimum length. Each of the arms is provided with a groove 10 which also extends downwardly and forwardly, as shown in this figure. Each of these grooves 10 extends substantially the full length of the arm 9 and is adapted to receive a roller 11 which is mounted on the outer end of a bed-moving crank 12.

The cranks 12 are keyed on the opposite ends of a drive shaft 13, as shown in Figures 2 and 3, which extends horizontally transversely of the housing 1 at a suitable level. The shaft 13 is rotatably disposed in bearings 14 carried by the frame members 6. It will be noted that the hangers 9 are in vertical planes substantially parallel with the members 6 and that the shaft 13 projects in opposite directions through such members so that the cranks 12 will be located adjacent the hangers 9 and between the hangers and the frame members. It will also be noted, best from Figure 3, that each of the rollers 11 is carried by a pin 11*a* mounted in the outer end of the crank 12. At one end, the shaft 13 has a gear 15 keyed thereto which may be driven by any suitable means but which is not shown. Adjacent the gear 15, an additional bearing 16 is provided for the shaft 13 and is supported by an arm 17 (Figure 2) from the adjacent frame member 6. This arm is provided with an upstanding portion 18 which extends angularly rearwardly towards the guide slots 5 and this portion 18 supports a bearing 19 on its upper end that is provided for a purpose to be explained later.

It will be understood that when the shaft 13 is rotated by means of the driven gear 15, the bed-moving cranks 12 will be swung about the axis of this shaft since they are keyed to the shaft. The rollers 11 carried by the outer ends of the cranks 12 will move along the grooves 10 and will move the hangers 9 vertically, resulting in vertical movement of the bed 2. It will be apparent that this crank arrangement will result in a simple harmonic vertical reciprocation of the bed 2.

As shown best in Figures 1 and 3, the impression cylinder 20 of the press is supported just in front of the guide slots 5 between the frame members 6. It will be apparent from Figure 1 that this cylinder 20 is at a level just above the upper end of the bed 2 when the bed is in lowermost position. This cylinder is of the usual form and is provided with the usual grippers (not shown) which are provided for gripping the sheet of paper to be printed when it is presented to it by the usual paper feeding mechanism (not shown) at the forward side of the press.

As shown best in Figure 6, the cylinder 20 is mounted on a horizontally disposed transverse shaft 21. The cylinder is rotatably carried on the shaft by means of the ball bearings 22 provided in each end of the cylinder at the axis thereof. The shaft 21 extends in opposite directions from the ends of the cylinder and each end of the shaft is provided with an eccentrically disposed portion 23. The eccentric portions 23 are rotatably carried in bearings 24 which are carried by the frame members 6. These bearings 24 are so disposed that the shaft 21 is disposed rearwardly and upwardly of the shaft 13 (Figure 1) and parallel therewith.

As previously indicated, the cylinder 20 must be moved toward and away from the vertical plane of the bed during the reciprocation of the bed so that the paper carried by the cylinder will be in contact with the form during the printing stroke but the cylinder will be spaced from the bed during the return stroke. This is accomplished by oscillating the shaft 21 in the bearings 24 in timed relationship to the movement of the bed. For this purpose, the shaft carries at one end thereof, for example, the left-hand end in Figure 6, a rocker arm 25 which is keyed thereon and which extends radially from the axis thereof. The outer end of the rocker arm 25 is connected by a special pivot structure 26 to the upper end of a link 27. The pivot structure 26 is shown best in Figure 7 and includes a pin 28 carried by the outer end of the member 25 and extending laterally into a notch 29 in the upper end of the link 27. A plunger 30 is slidably mounted in a socket 31 formed in the arm 27 at the lower side of the notch 29. This socket has a spring 32 disposed therein which presses the plunger 30 outwardly, the plunger being slidably mounted in the socket and limited in its movement by the pin 35 on the plunger cooperating with a slot 36 in the wall of the socket. The outer end of the plunger 30 is beveled and always engages the pivot pin 26 so as to prevent it from moving free out of the notch. Due to this special pivot, link 27 can be disconnected easily from member 25 to permit manual rotation of the cylinder without moving it towards the form as in "making-ready." The lower end of the link 27, as shown best in Figures 1 and 7, is pivotally connected, as at 37, to the rear end of a lever 38 which is pivoted at its forward end for movement in a vertical plane about the pivot structure 39 carried by the adjacent frame member 6.

For moving the lever 38 vertically, a cam 40 is provided. This cam 40 is keyed on the shaft 13 between one of the crank arms 12 and the indicated frame member 6, as shown best in Figure 6. As illustrated in Figures 6 and 7, the cam member 40 is provided with a continuous cam groove 41 of suitable outline which receives a cam follower in the form of a roller 42 (Figure 8) carried by the lever 38 intermediate the ends thereof (Figure 7). The cam groove 41 is so shaped and related to the cranks 12 as to obtain oscillation or rocking of the member 25 at the proper time during movement of the bed 2. It will be apparent that vertical movement of the lever 38

by the cam 40 will result in rocking movement of the rocker member 25 which, in turn, will cause rocking movement of the cylinder 20 towards and away from the bed since the axis of the cylinder will move about the axes of the bearings 24, as shown in Figure 7, due to the provision of the eccentric portions 23 of the shaft 21. In Figure 7, the axis of the shaft 21 and, therefore, of the cylinder is indicated by the reference character 21*a* while a line passing through the axes of the bearings 24 is indicated by reference characters 24*a*. It will be noted that the point 21*a* rocks about the point 24*a*.

As previously indicated, it is necessary to rotate the cylinder 20 in timed relationship to the reciprocating movements of the bed 2 so that the bed and the surface of the cylinder will travel at the same linear speed at least during the printing stroke. Since, as previously indicated, during each stroke of the bed, the speed of movement of the bed increases from zero to a maximum and then gradually decreases until it reaches the limit of its movement, it is necessary that the cylinder be rotated at a variable speed but which corresponds to the speed of the bed during part of its stroke. For this purpose, I provide the variable speed driving mechanism which will now be described.

This variable speed driving mechanism is, in effect, a variable crank drive. It is illustrated best in Figures 4, 5, and 6. It is operated by the driven gear 15 carried by the shaft 13. It includes a constantly rotating driven gear 45 which is keyed on the outer end of a stub shaft 46 that is formed as a part of the driving member 47. The shaft 46 is rotatably mounted in the bearing 19 which, as previously mentioned, is carried by the arm 18. The axis of the shaft 46 is parallel to but spaced from the axis of the cylinder 20. The driving member 47 is in the form of an arm extending radially in both directions from the shaft 46. It is provided with a guide slot 48 on its inner face which extends the full length thereof. In this slot, a block 49 is slidably mounted and carries an inwardly projecting pin 50. The pin 50 fits rotatably in an opening in a driven gear 51 at a point spaced radially from the axis of rotation of such gear. This gear 51 is mounted for free rotation on the projecting end 52 of the shaft 21 and is concentric with such end of the shaft, as shown in Figure 4.

The lower side of the gear 51 meshes with a pinion 53 which is keyed on one end of a pin 54 that is rotatably mounted in a bearing in the frame member 6 at a point spaced from but parallel to the axis of the bearing 24 in which the eccentric portion 23 of shaft 21 is mounted. The opposite end of the pin 54 has an identical pinion 55 keyed thereon which meshes with a gear 56 that is suitably secured to the end of the cylinder 20 for rotation with the cylinder. This gear is concentric with the cylinder 20 and further is provided with an enlarged central opening 56*a* surrounding bearing 24 for permitting relative movement of the gear and bearing and ensuring that gear 56 always meshes with pinion 55.

It will be apparent that with this variable drive, the gear 45 will rotate the driving member 47. By means of the pin 50, this member 48 will drive the gear 51. The gear 51 will be driven at a varying speed, due to the fact that during rotation of member 47 the effective length of the crank arm, which extends from the axis of shaft 46 to the axis of pin 50, will be varied. This variation is caused by the block 49 moving towards and away from the axis of the driving member 47 during rotation of that member. The reason for this movement is that the axis of the shaft 46 is spaced from the axis of the gear 51. Rotating the gear 51 at a varying speed will drive the gear 56 at a varying speed because of the driving connection between these gears formed by the pinions 53 and 55. Since the gear 56 and the cylinder 20 rotate together, the cylinder will be rotated at a varying speed but in the same direction at all times. The cylinder will be rotated about its main axis 21*a*.

As previously indicated, the shaft 21 may be oscillated by means of a rocker member 25 to move the cylinder towards and away from the bed 2. This, as shown best in Figure 6, rotates the smaller portions 23 of the shaft in the bearings 24. Since these portions 23 of the shaft 21 are eccentric to the main central part of the shaft, the axis 21*a* of the shaft, or in other words the axis of the cylinder 20, will therefore be caused to rock about the axis 24*a* passing through the bearings 24, as shown in Figure 7. Consequently, the cylinder 20 is rocked bodily towards and away from the bed, as illustrated best in Figure 7. The cylinder 20 is in contact with the bed, as shown in Figure 7, when the shaft 21 is oscillated to its nearest position to the bed 2 and chase 3 carried thereby. When the shaft 21 is rocked in the opposite direction as shown by the arrow in Figure 7, the cylinder 20 is moved away from the bed. During movement of cylinder 20 away from the bed, the gear 56 will move therewith and the teeth of this gear will slide outwardly relative to the teeth of pinion 55 but the teeth of the two gears will always remain in mesh. At this time when the pinion 55 and gear 56 are not in tight mesh, no work is being performed since cylinder 20 is spaced from chase 3 and it is merely necessary to rotate cylinder 20, the rotation of cylinder 20 about axis 21*a* of the shaft 21 being continuous but at a variable speed.

In Figure 11, I have illustrated the relationship of the bed-moving cranks, the variable crank drive for the cylinder, and the cam for controlling the movement of the cylinder towards and away from the bed together with the relationship of the bed and the cylinder.

As the cranks 12 move through one hundred and eighty degrees of rotation from the position A to the position A—1, the bed 2 is moved on its downward stroke from its uppermost position A to its lowermost position A—1. Simultaneously, the driving member 47 is rotated through a complete revolution from position A back to the same position indicated by A—1. In other words, while the cranks are making one-half of a revolution, the member 47, and the cylinder 20 driven thereby, makes a complete revolution, due to the relative sizes of the gears 15 and 45 (Figure 12). Movement of the crank arms 12 through one hundred and eighty degrees rotates the cam 40 to the same extent. It will be noted from Figure 11, that the cam groove 41 includes an outer arcuate portion 41*a* and an inner arcuate portion 41*b* which are concentric with each other and with the axis of rotation of the cam. The portions 41*a* and 41*b* are joined by connecting portions 43*b*. During movement of the cranks from position A to position A—1, the cam 40 is rotated in a clockwise direction and the roller 42 will move in the cam groove from the position A to the position A—1. At position A, the roller will just be entering the one portion 43*b*

of the groove. In this position of the roller and while the cam roller is moving from A to B where the portion 41*a* of the cam groove starts, the cranks 12 are swinging from A to B which will move the bed 2 downwardly from A to B. At this time, the lever 38 (Figure 7) will be in such position that the rocker member 25 will move the cylinder towards the bed. As soon as the roller enters the portion 41*a* of the cam groove at position B and until the roller reaches position D, at the end of such portion of the groove, the cylinder 20 will be held in contact with the type form on bed 2. During this time, the form on the bed 2 will move downwardly from position B to position D, during which the printing operation will occur. As the crank arms 12 swing from position B to position D, the cylinder driving member 47 will be rotated from position B to position D and, consequently, the cylinder will also be rotated between such positions. The crank arms 12 and the member 47 are so related that the linear speed of movement of the surface of the cylinder from point B to point D will be the same as the speed of movement of the bed 2 from point B to point D. Therefore, proper registry of the impression cylinder with the type form will result. When the cam roller 42 moves from position D into the portion 43*b* of the cam groove to position A—1, the cylinder will be moved away from the bed and will remain away from the bed while the roller is in the portion 41*b* of the groove until it again reaches position A where the cylinder will start to move again towards the bed. The speed of movement of the cylinder 20 between positions B and D is the same as that of the bed between such positions but in other relative positions the speed of movement of these members relative to each other will be different. However, it is only necessary that they correspond in speed of movement during the actual impression which will be between positions B and D.

In Figures 3, 9 and 10, I have illustrated the inking fountain and associated parts. Some of the inking rollers 60 are carried by a bracket 61 disposed beneath the cylinder 20 at the rear side thereof. This bracket 61 is provided with a vertical pivot structure 62 for mounting it on the left-hand frame member 6 (Figure 3) so that the bracket 61 and the rollers carried thereby may be swung forwardly away from the bed 2 to the left-hand side of the press. Some of the inking rollers 63 are carried by the inking fountain 64 at the rear side thereof. This fountain 64 is pivoted to the right-hand frame member 6 (Figure 3) by a vertical pivot structure 64*a*. Thus, the fountain 64 may be swung forwardly and to the right-hand side of the press. Because of this pivot arrangement, it is possible to swing the two units 61 and 64 to the opposite sides of the press to permit ready access to the bed 2 to mount the chase 3 thereon. In mounting the chase on the bed, the bed may be moved to its lowermost position. Then it is merely necessary to lift the chase sufficiently to position its lower edge in the socket 4*a* on the bed and then engage the latches 4 with the upper end of the chase. Usual locking means 65*b* may be provided for locking the roller units in operative position.

The fountain 64 includes a fountain roller 65 and a ductor roller 66 for transferring ink from roller 65 to one of the rollers 63. This roller 66 is carried on the upper ends of the arms 67 which are keyed on the transverse shaft 68 rotatably carried by the sides of the fountain 64. A rocking lever 69 is keyed to the left-hand end of shaft 68 (Figure 3) and is provided with a cam roller 70 on its outer end which engages a cam 71 keyed on shaft 13. During rotation of the cam 71, the ductor roller 66 will be moved back and forth between the fountain roller 65 and the adjacent roller of the rollers 63.

The fountain roller 65 is adjacent the lower edge of the inclined bottom 72 on the inking fountain. A ratchet gear 73 is keyed on the right-hand end of the roller shaft (Figure 9). As shown in Figure 9 a pawl 74 is associated with the ratchet 73 and is pivotally carried on the end of a link 75. This link 75 (Figures 9 and 10) is pivoted to the lower end of an arm 76 by an adjustable pivot structure 77. The pivot structure embodies a pin 78 which has a head 79 slidably mounted in an undercut groove extending along arm 76. The member 75 is rotatably mounted on a bushing 81 which is thicker than the adjacent part of the arm. A nut 82 is threaded on the projecting end of the pin 78 and may be used to clamp the bushing in any position along the arm 76. The upper end of the arm 76 is pivoted to the fountain as at 77*a* and is provided with an integral rearwardly and downwardly extending actuating arm 83 which carries a roller 84 on its end that engages a cam 85. The cam 85 is keyed on the shaft 13.

It will be apparent that during each revolution of the cam 85, the arm 76 will be rocked about the pivot 77*a* thereby producing one forward stroke of the arm 75 which carries pawl 74. This will move the roller 65 through one step of its rotation. The extent of this movement can be varied easily and quickly by adjustment of the pivot 77 along the arm 76. This will vary the circumferential area of the roller 65 which is covered by the ink passing through the lower end of the fountain between the edge 86 of the inclined bottom and the roller 65.

The edge 86 is adjustable towards and away from the roller 65 to vary the thickness of the film of ink applied to the roller. This is accomplished by means of a plurality of adjustable members 87 which are pivoted so they can be rocked on a shaft 88 disposed beneath the bottom 72 adjacent its lower edge and extending from one side of the fountain to the other. Each member 87 is provided on its upper surface with a button 89 which engages the lower edge of the bottom 72. The members 87 are individually adjustable about the shaft 88 by means of screws 89, the forward end of each of which engages the forward surface of one of the members 87. The screws 89 are threaded through a support 90 which forms a part of the fountain structure. Thus, the edge 86 of the bottom of the fountain can be adjusted at a number of points throughout its length towards or away from the roller 65.

It will be apparent from the above description that I have provided a printing press having a number of advantages. The movement of the bed and the movement of the cylinder are so related as to obtain a proper impression during the printing operation. Furthermore, the cylinder is moved towards and away from the bed in proper timed relationship with the movement of the bed so that the paper on the cylinder will contact with the type form only during the printing operation. The drive for the cylinder is such that it will not interfere with the movement of the cylinder towards and away from the

bed. The fountain mechanism and inking rollers are supported in a novel manner to permit easy access to the bed to mount the chase thereon. The ratchet mechanism for operating the fountain roller can be adjusted easily to vary its stroke and the edge of the fountain bottom can be adjusted easily and effectively relative to the fountain roller.

Various other advantages will be apparent from the preceding description, the drawings and the following claims.

Having thus described my invention, what I claim is:

1. In combination with a bed mounted for straight line reciprocation and a cylinder mounted for movement towards and away from the bed, means for rotatably supporting said cylinder in cooperative relationship with the bed and including a shaft, means for driving said cylinder to cause it to rotate on said shaft, said means comprising a variable crank drive including a driving member mounted for rotation about an axis spaced from but parallel to the cylinder shaft axis, a pin carried by the driving member for movement radially thereof, a driven gear mounted co-axial with the cylinder for rotation therewith, said pin being rotatably connected to said driven gear at a point spaced from the axis of such gear, an additional driven gear mounted co-axial with the cylinder and carried thereby for movement therewith towards and from the bed, and a driving connection between said first-named driven gear and said driven gear carried by the cylinder which permits such movement of the cylinder, said driving connection comprising a pair of pinions connected together and each engaging one of said gears.

2. Apparatus according to claim 1 wherein said driven gears are spaced axially, and wherein a cylinder shaft-supporting bearing carried by a support is disposed between such gears, said driving connection including a shaft rotatably carried by said support in parallel relationship to the axis of said cylinder shaft bearing, said pinions being keyed on the opposite ends of said last-named shaft.

3. Apparatus according to claim 2 wherein the driven gear carried by the cylinder is provided with an enlarged opening that fits around said cylinder shaft-supporting bearing to permit bodily movement of the cylinder relative to the bearing.

ANDREW F. BELL.

REFERENCES CITED

The following references are of record in the file of this patent:

UNITED STATES PATENTS

Number	Name	Date
Re. 5,501	Montague	July 22, 1873
116,778	Wallace	July 4, 1871
130,176	Allen	Aug. 6, 1872
619,788	Potter	Feb. 21, 1899
1,259,975	Goss	Mar. 19, 1918
1,457,501	Cox	June 5, 1923
1,512,647	Stevens	Oct. 21, 1924
1,587,968	Low	June 8, 1926

FOREIGN PATENTS

Number	Country	Date
297,605	Great Britain	Sept. 27, 1928