May 7, 1929. H. E. SPENCER 1,712,454

MANUFACTURE AND FILLING OF RECEPTACLES FOR LIQUID, SEMILIQUID, POWDERY, GRANULAR, OR SOLID SUBSTANCES

Filed Sept. 13, 1926 11 Sheets-Sheet 1

Fig. 1.

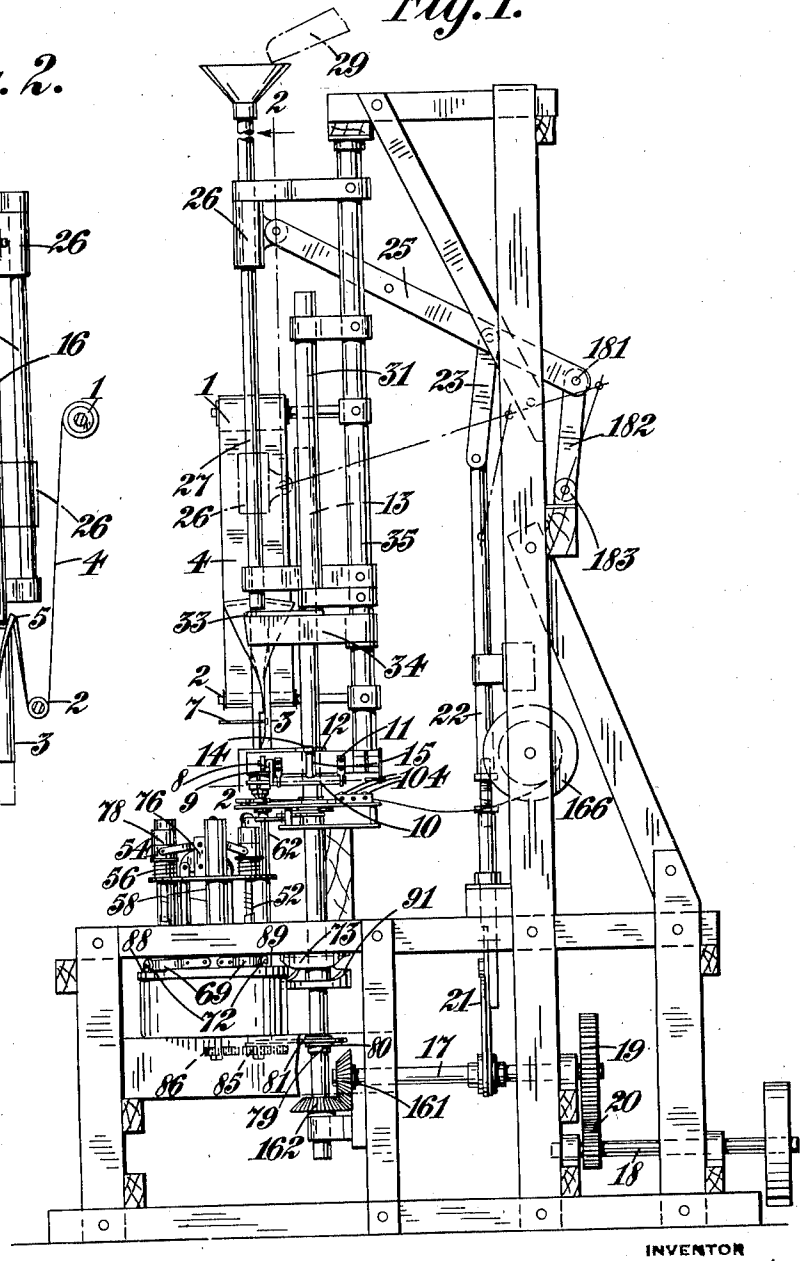

Fig. 2.

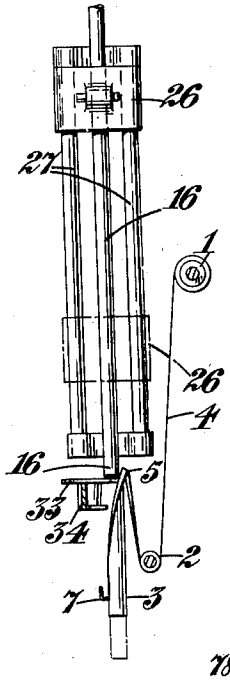

INVENTOR

Harold Edwin Spencer

by his attys

Byrnes, Stebbins & Parmelee

May 7, 1929. H. E. SPENCER 1,712,454

MANUFACTURE AND FILLING OF RECEPTACLES FOR LIQUID, SEMILIQUID, POWDERY, GRANULAR, OR SOLID SUBSTANCES

Filed Sept. 13, 1926 11 Sheets-Sheet 2

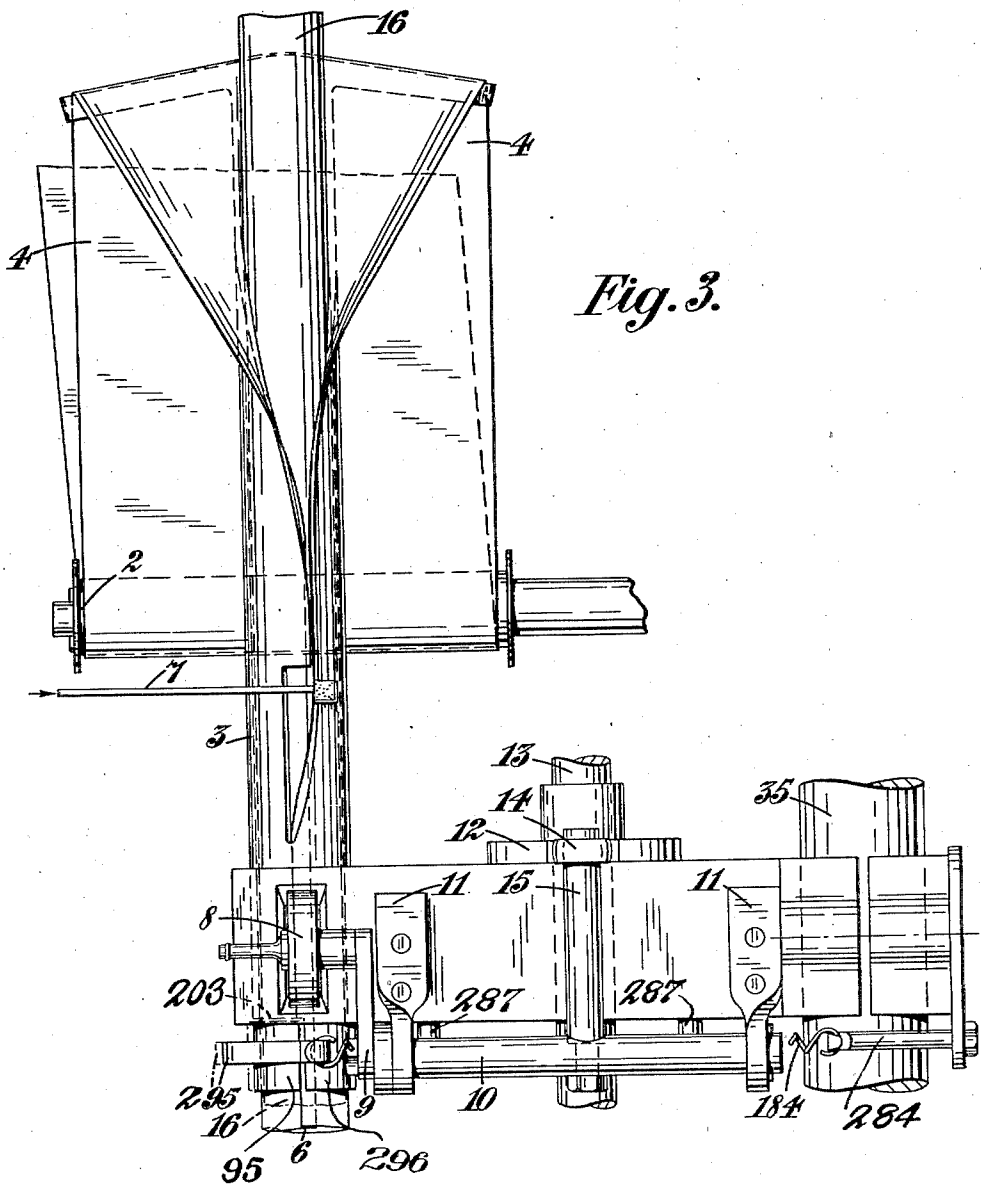

Fig. 3.

INVENTOR
Harold Edwin Spencer
by his attys.
Byrnes, Stebbins & Parmelee

May 7, 1929. H. E. SPENCER 1,712,454

MANUFACTURE AND FILLING OF RECEPTACLES FOR LIQUID, SEMILIQUID, POWDERY, GRANULAR, OR SOLID SUBSTANCES

Filed Sept. 13, 1926 11 Sheets-Sheet 3

Fig. 4.

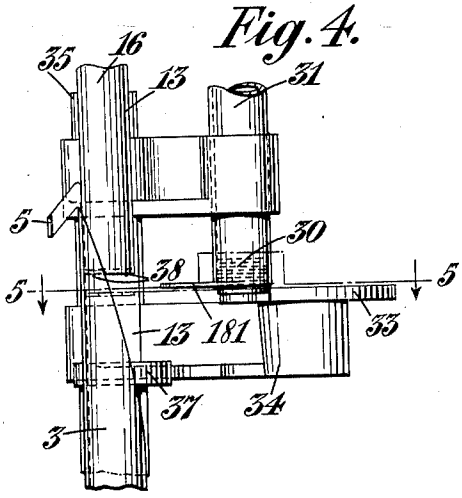

Fig. 5.

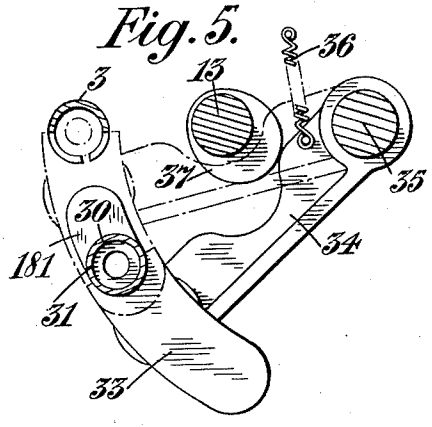

Fig. 6.

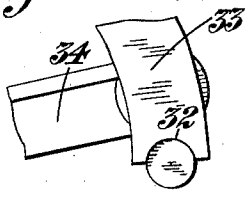

Fig. 7.

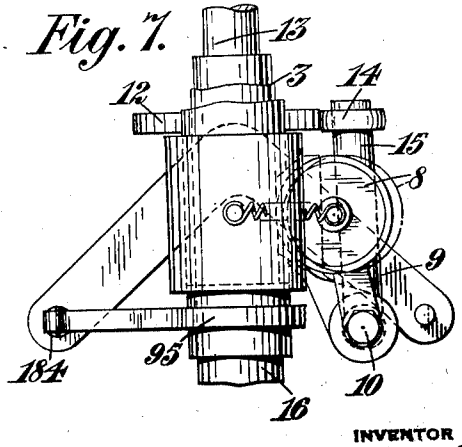

INVENTOR
Harold Edwin Spencer
by his attys
Byrne Stebbins & Parmelee

May 7, 1929. H. E. SPENCER 1,712,454

MANUFACTURE AND FILLING OF RECEPTACLES FOR LIQUID, SEMILIQUID, POWDERY, GRANULAR, OR SOLID SUBSTANCES

Filed Sept. 13, 1926 11 Sheets-Sheet 4

Fig. 8.

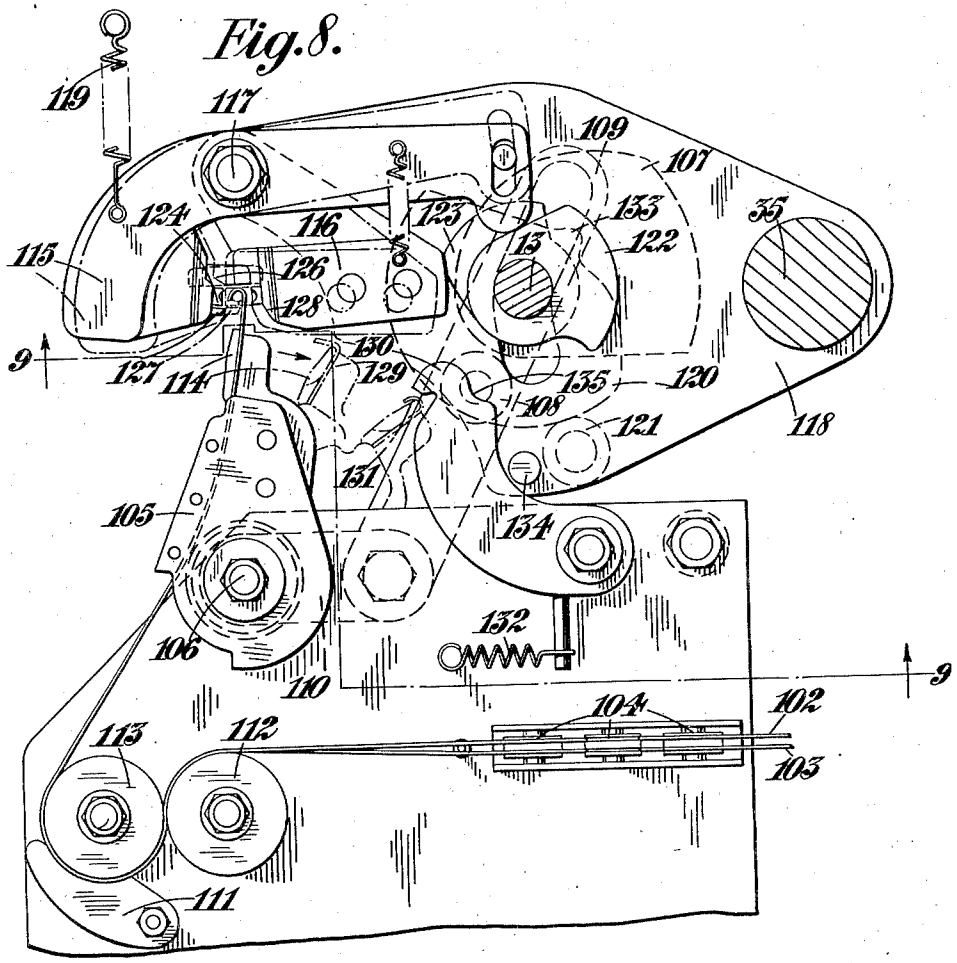

Fig. 9.

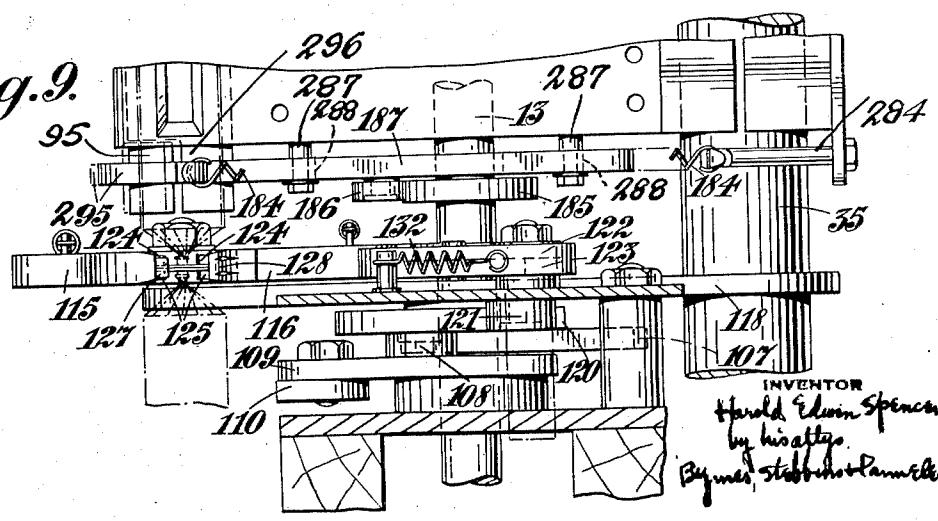

INVENTOR
Harold Edwin Spencer
by his attys.
Byrnes, Stebbins & Lamberton

May 7, 1929. H. E. SPENCER 1,712,454

MANUFACTURE AND FILLING OF RECEPTACLES FOR LIQUID, SEMILIQUID, POWDERY, GRANULAR, OR SOLID SUBSTANCES

Filed Sept. 13, 1926 11 Sheets-Sheet 5

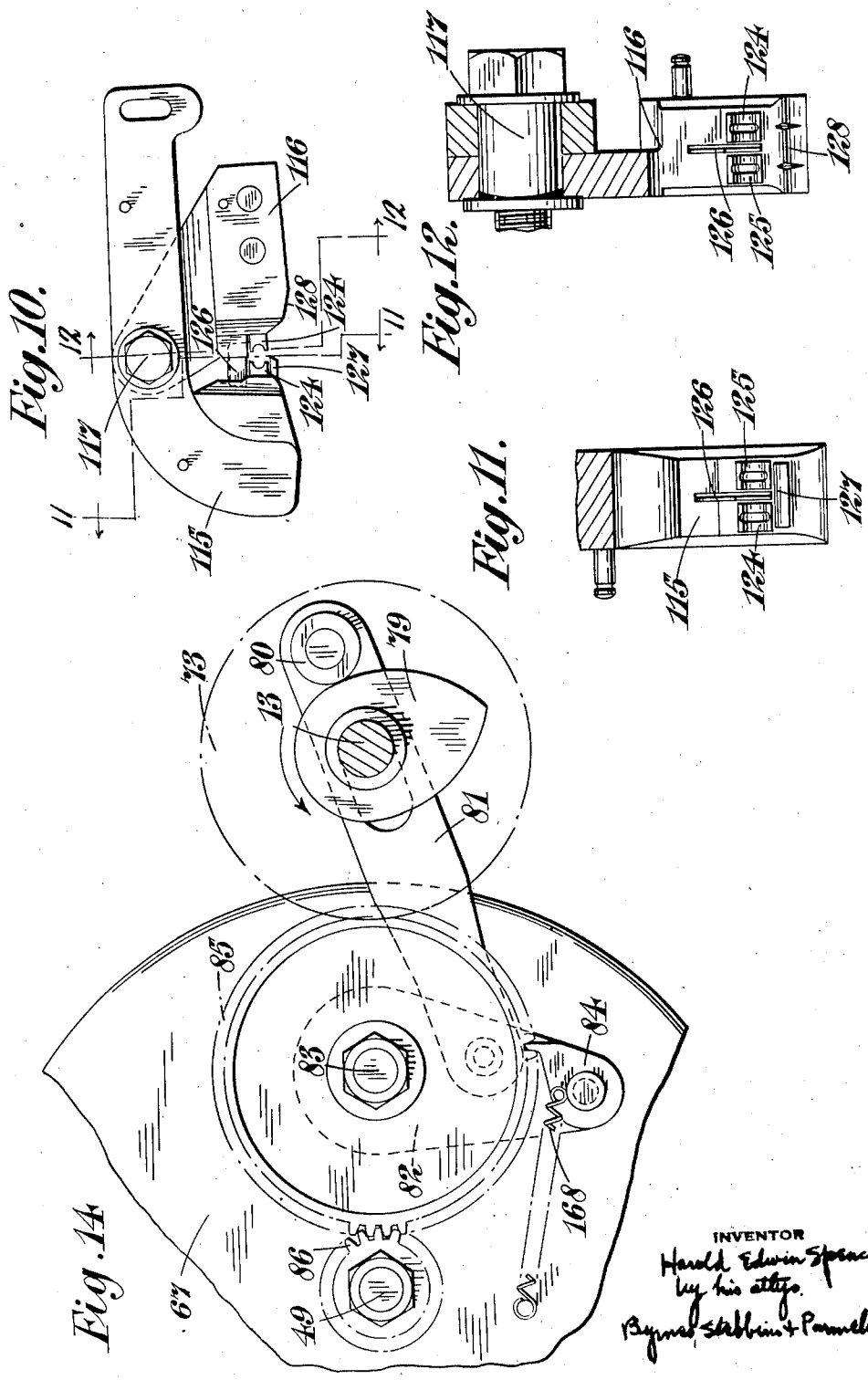

INVENTOR
Harold Edwin Spencer
by his attys.
Byrnes, Stebbins & Parmelee

May 7, 1929. H. E. SPENCER 1,712,454

MANUFACTURE AND FILLING OF RECEPTACLES FOR LIQUID, SEMILIQUID, POWDERY, GRANULAR, OR SOLID SUBSTANCES

Filed Sept. 13, 1926 11 Sheets-Sheet 6

Fig. 13.

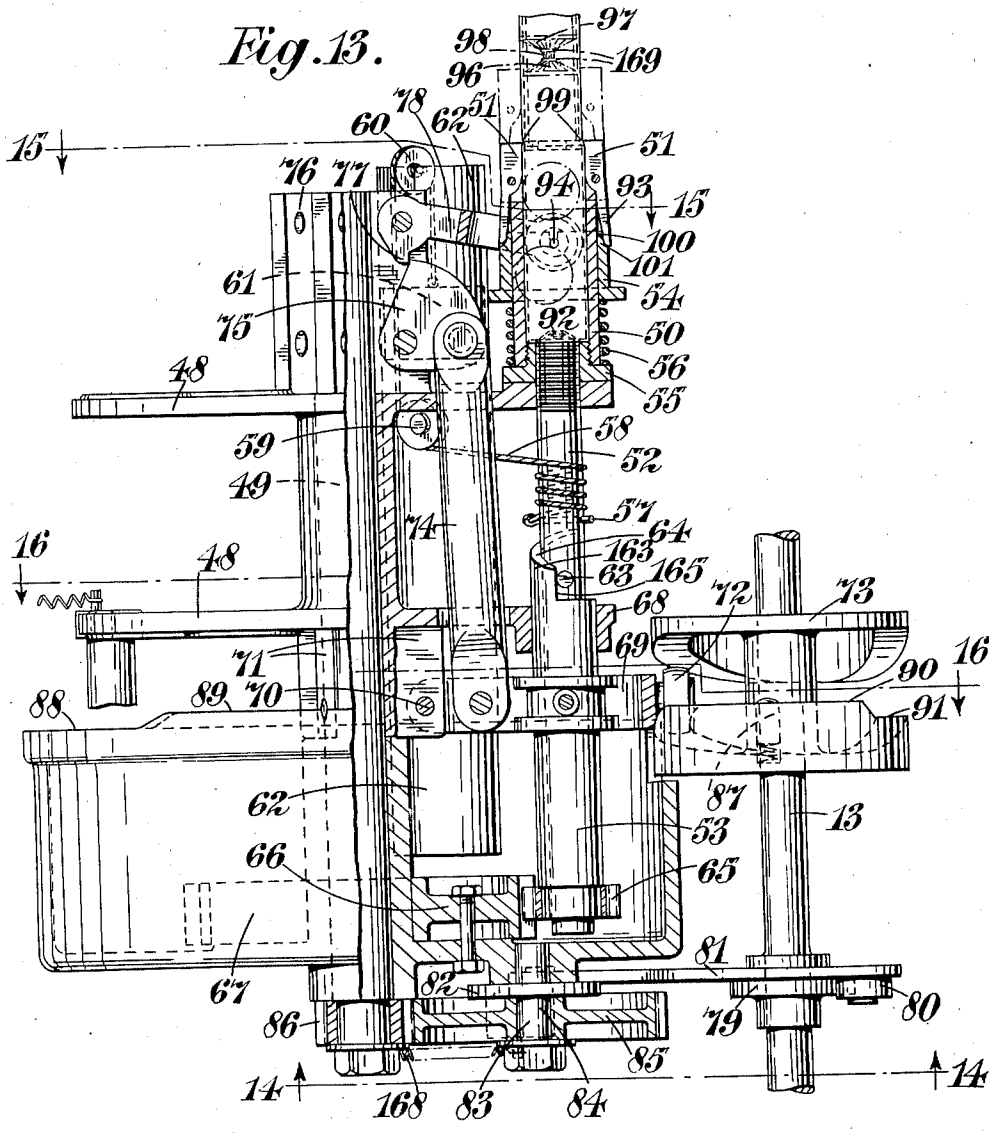

INVENTOR

Harold Edwin Spencer

by his attys

Byrnes, Stebbins & Parmelee

May 7, 1929. H. E. SPENCER 1,712,454

MANUFACTURE AND FILLING OF RECEPTACLES FOR LIQUID, SEMILIQUID, POWDERY, GRANULAR, OR SOLID SUBSTANCES

Filed Sept. 13, 1926 11 Sheets-Sheet 7

Fig. 15.

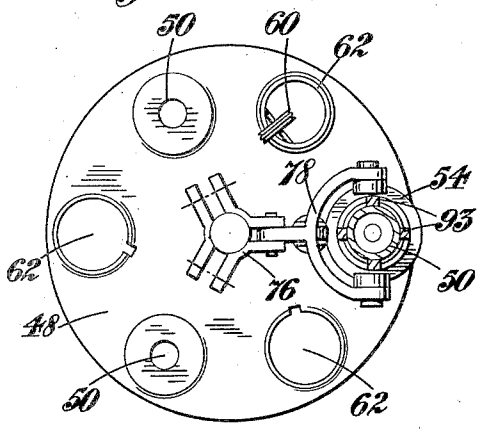

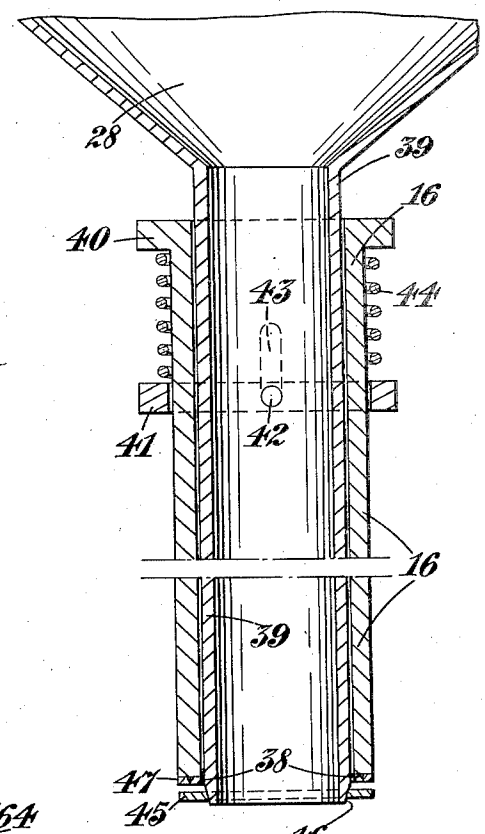

Fig. 17.

Fig. 16.

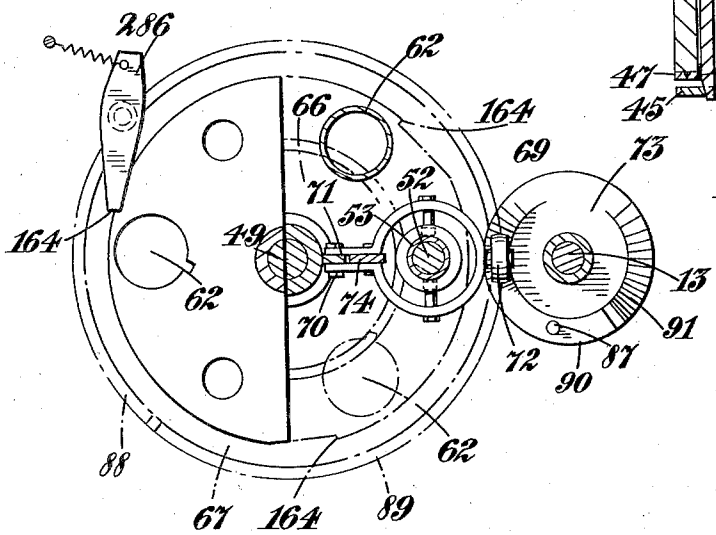

INVENTOR

Harold Edwin Spencer

by his attys.

Byrnes Stebbins + Parmelee

May 7, 1929. H. E. SPENCER 1,712,454

MANUFACTURE AND FILLING OF RECEPTACLES FOR LIQUID, SEMILIQUID, POWDERY, GRANULAR, OR SOLID SUBSTANCES

Filed Sept. 13, 1926 11 Sheets-Sheet 8

Fig. 18.

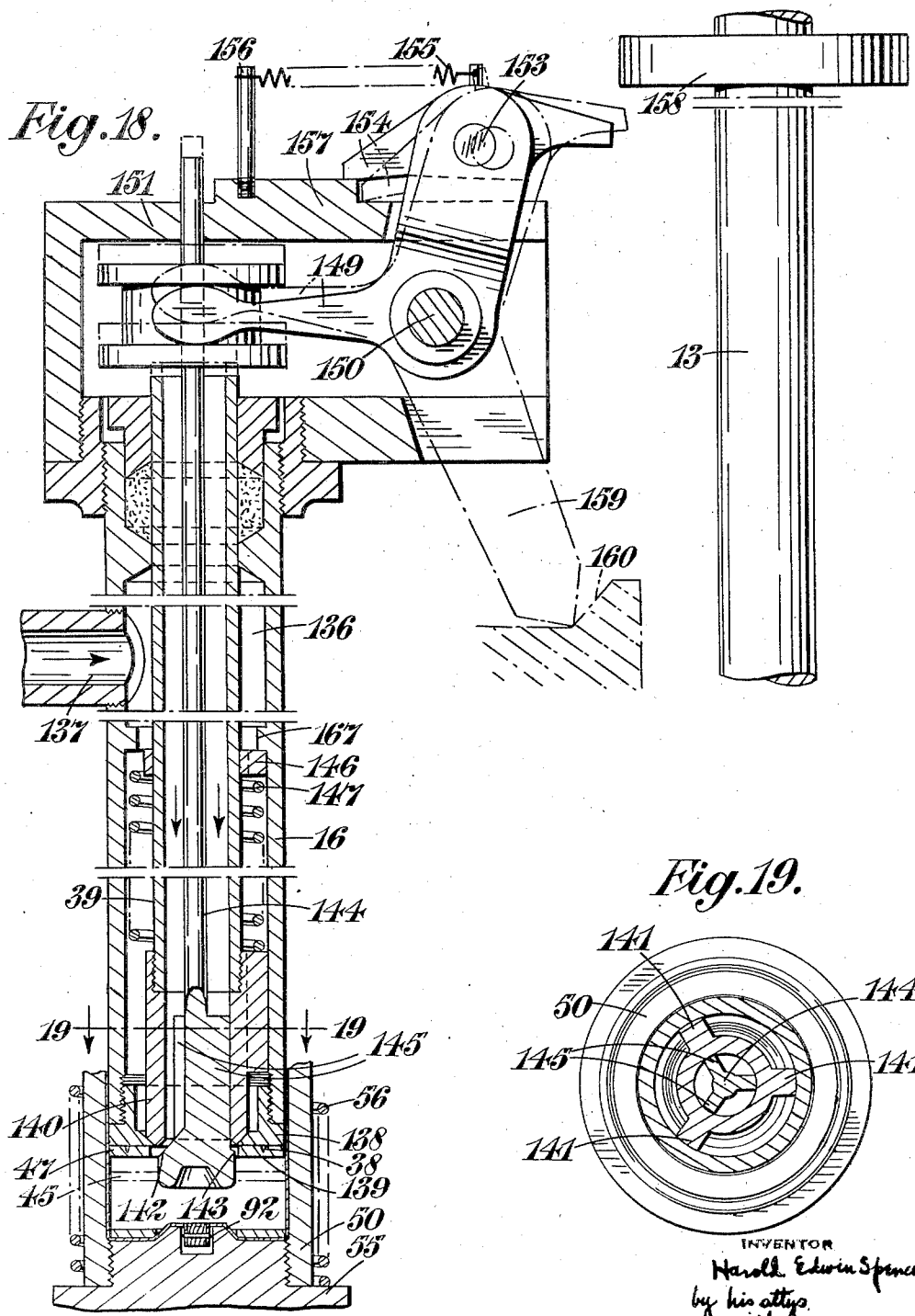

Fig. 19.

INVENTOR

Harold Edwin Spencer

by his attys.

Byrnes, Stebbins + Parmelee

May 7, 1929. H. E. SPENCER 1,712,454

MANUFACTURE AND FILLING OF RECEPTACLES FOR LIQUID, SEMILIQUID, POWDERY, GRANULAR, OR SOLID SUBSTANCES

Filed Sept. 13, 1926 11 Sheets-Sheet 9

Fig. 20.

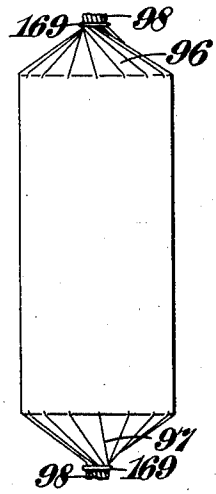

Fig. 21.

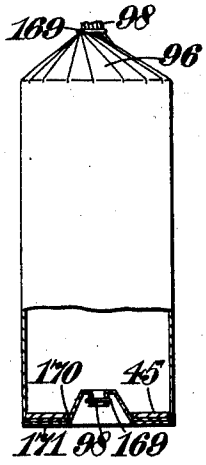

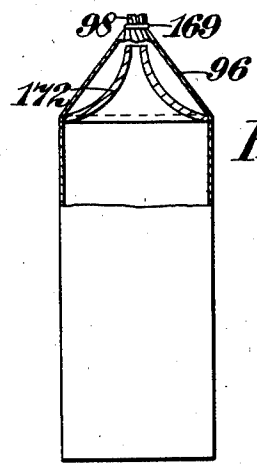

Fig. 22.

Fig. 23.

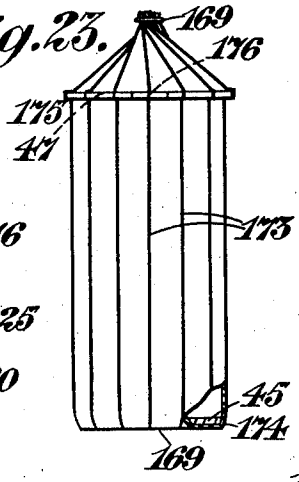

Fig. 24.

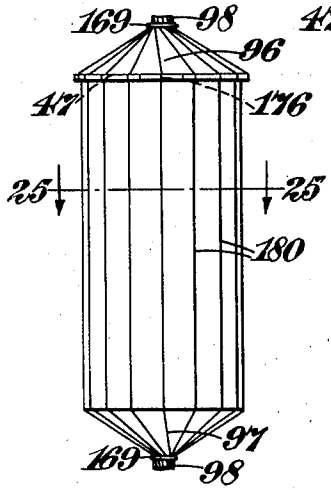

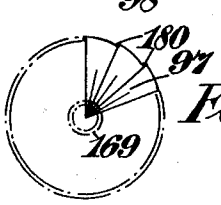

Fig. 25.

Fig. 26.

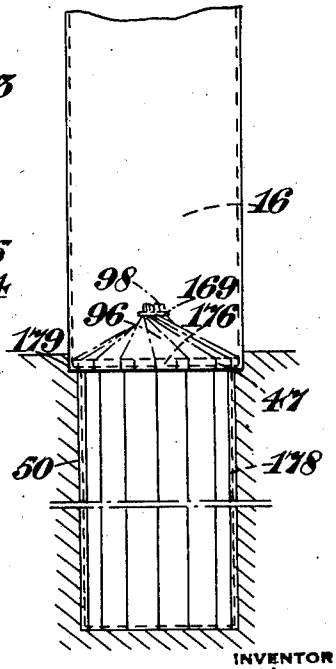

INVENTOR

Harold Edwin Spencer

by his attys.

Byrne, Stebbins & Parmelee

May 7, 1929. H. E. SPENCER 1,712,454

MANUFACTURE AND FILLING OF RECEPTACLES FOR LIQUID, SEMILIQUID, POWDERY, GRANULAR, OR SOLID SUBSTANCES

Filed Sept. 13, 1926 11 Sheets-Sheet 10

Fig. 27.

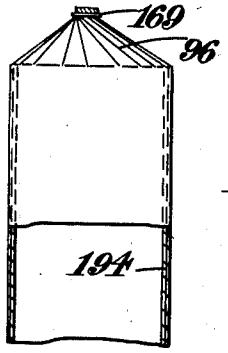

Fig. 28.

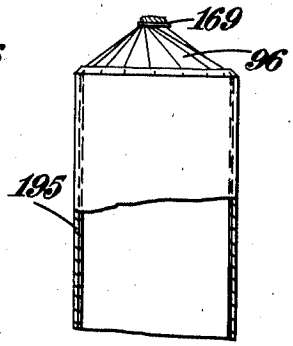

Fig. 29.

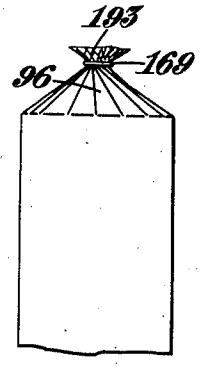

Fig. 30.

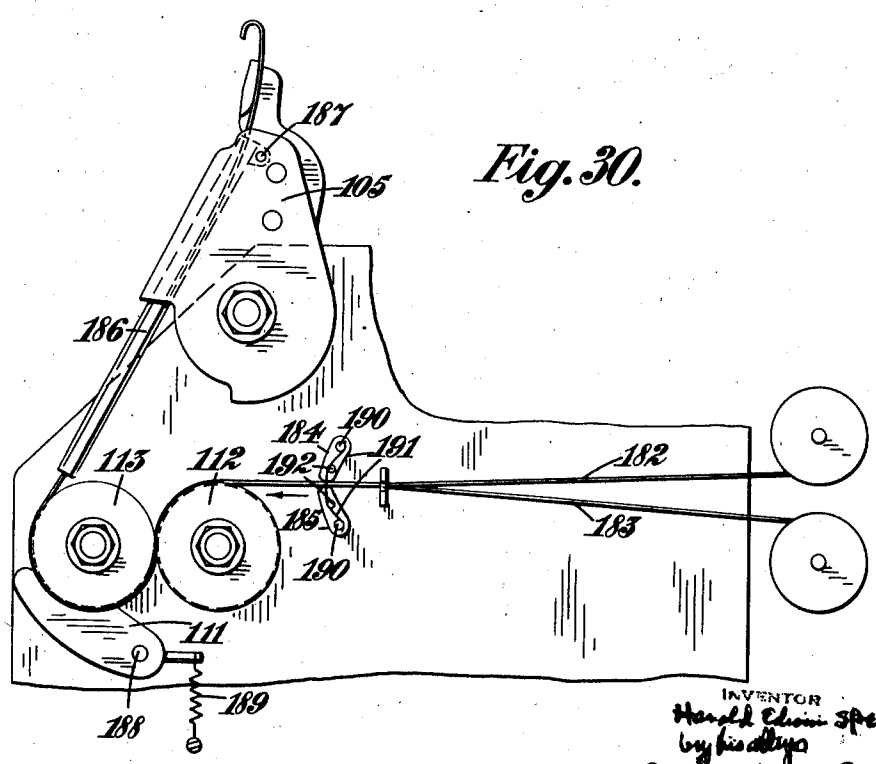

INVENTOR
Harold Edwin Spencer
by his attys
Byrnes, Stebbins + Parmelee

May 7, 1929. H. E. SPENCER 1,712,454

MANUFACTURE AND FILLING OF RECEPTACLES FOR LIQUID, SEMILIQUID, POWDERY, GRANULAR, OR SOLID SUBSTANCES

Filed Sept. 13, 1926 11 Sheets-Sheet 11

Fig. 31.

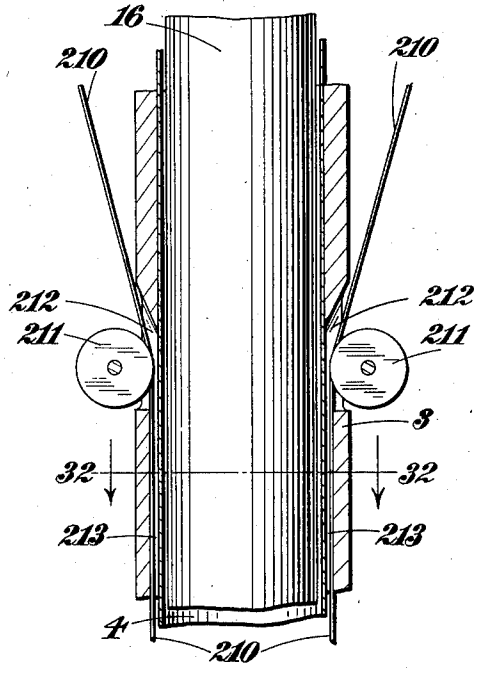

Fig. 32.

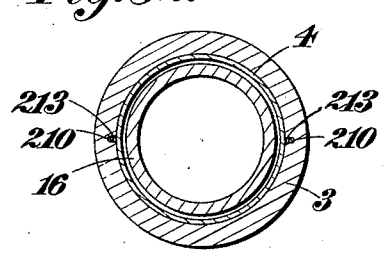

Inventor:
Harold E. Spencer
by Byrnes, Gibbins & Parmelee
his attorneys

Patented May 7, 1929. 1,712,454

UNITED STATES PATENT OFFICE.

HAROLD EDWIN SPENCER, OF SURREY, ENGLAND, ASSIGNOR TO FISHER'S FOILS LIMITED, OF LONDON, ENGLAND.

MANUFACTURE AND FILLING OF RECEPTACLES FOR LIQUID, SEMILIQUID, POWDERY, GRANULAR, OR SOLID SUBSTANCES.

Application filed September 13, 1926, Serial No. 135,050, and in Great Britain September 23, 1925.

This invention is for improvements in or relating to the manufacture of containers from flexible material and the filling of such containers with liquid, semi-liquid, powdery, granular or solid substances, and it has for one of its objects to provide for the expeditious and cheap packing of said substances which for brevity will be hereinafter referred to as the "charge".

The invention is concerned with apparatus for manufacturing and charging containers of the type wherein a web of flexible material (for example paper) from which the container is to be made is led from a supply roll through a former to bring it to the shape of a tube, the forward end of the tubular container so formed is closed, and the tubular container is charged through its open end.

One feature of the invention consists in the provision of means adapted to cause all parts of the wall of the tubular container at the rear of the charge to contract centrally about the axis of the container so as to form a contracted portion, and means whereby a fastening device additional to the main body of the said tubular container is applied to said contracted portion without itself actually causing the contraction.

The "former" may be of such shape as to create a tubular container of any desired cross-section, and it will be understood that at the commencement of operations it will be necessary to close, probably manually, the leading end of the first individual container; after this the closing of the individual containers may proceed automatically, the rearward end of the one being closed simultaneously with the closing of the leading end of the next following container. For brevity, these "individual containers" will be hereinafter referred to as "containers".

According to another feature of the invention one or more supports (such as discs) may be placed in the interior of each container. These supports may be located at the leading and rearward ends of the container, or at one end only, as preferred. They conform to the internal cross-section of the tubular container and serve to maintain the shape of the container during and after the closing and the formation of the end or ends of the container, but especially during the closing. The said supports may be simply dropped into position by hand, or they may be inserted in the container by means of a mandrel (hereinafter referred to) which is used in the formation of the tubular container and the charging of the containers, which mandrel can be subsequently removed when necessary, leaving the support behind. The support may bear advertising or other matter intended to show through the material of which the container is made, such material being, in this case, transparent or translucent. The discs may be either flat or of any desired shape, e. g. they may be shaped to constitute a spout round which the end of the container is closed and fastened.

Furthermore, if desired the support may take the form of a liner, made for example of papier-mâché or compressed cardboard, which is inserted in the container to strengthen the sides.

According to another feature of the invention, external attachments (for example one or more strands of wire, string or ribbon) may be secured to the containers. These external attachments may serve, among other purposes which will be apparent from the following description, as stiffeners, handle-loops or as decorative devices.

Moreover, there is provided a mandrel between which and the said tubular container there is provision for relative longitudinal movement, which mandrel is so shaped and disposed as to lie in the interior of, and support, the said tubular container during its formation by a former, and also to support, during the closing of the walls of the tubular container together, the said leading end of the container next following the charged container. Thus, whether or not one of the aforesaid supports is inserted into said leading end, the mandrel may be employed to afford the support requisite during the formation of the closed end. The mandrel may be fixed in position and the tubular container formed around and fed along it, or the mandrel may be longitudinally movable so as only to be brought into operative position when required.

According to another feature of the invention means may be provided to impart relative longitudinal movement to the former and the mandrel and thereby cause the web of material to be fed through the former to form the tubular container. Conveniently, means

may also be provided whereby at the desired times the mandrel is moved to cause pressure to be inserted against the closed end of the tubular container and thus force the web of material through the former, or the forcing in of the charge into the tubular container may be employed for the same purpose, and it will be understood that the formation of the tubular container continuously proceeds as the consequence of such feed.

The mandrel may be provided with a conduit (for example a separate pipe inside a hollow mandrel) for permitting the passage of the charge through the mandrel into the said tubular container, this being particularly useful when the containers are to be filled with liquids or semi-liquids. In such a construction the support to be inserted in the container may take the form of a perforated disc (with or without a non-return flap valve or the like) to be placed at the end of the mandrel so as to be a gripping fit on the projecting end of the said feed pipe and rest against a shoulder on it. Such a disc can be placed in position, when the mandrel is outside the container and after the mandrel has been drawn into operative position, the feed of the charge through it may commence. It will be understood that if a supporting disc is inserted at the leading end of the container, there is no necessity for it to be perforated, though similar discs may be employed at both ends if preferred. As the charging proceeds, the mandrel may either recede or the tubular container be forced forwards. During the relative movement of the mandrel and the tubular container, it might be arranged that the feed pipe with the disc ceases to recede when the full charge has been inserted, while the mandrel itself continues its receding movement until the distance between the disc and the end of the mandrel is such as to leave sufficient material for closing together, the walls of the tubular container. This closing movement will cause the walls of the tubular container to grip the disc, and as the walls contract to the size of the feed pipe, this latter may be withdrawn from the charged container into the main part of the mandrel and so allow completion of the closing operation. The mandrel may be provided with a washer, say of rubber, expansible if desired, to make a piston joint within the "former", and it will be appreciated that the end of the mandrel and the disc which has been left inside the charged container afford the requisite supports between which the wall-closing operation is carried out.

According to a further feature of the invention means are provided (preferably automatically movable into and out of operative position) for attaching a fastener to the walls of the aforsaid tubular container at the situation where such walls have been closed together. Conveniently, two fasteners may be attached at each of said situations and means may be provided for severing the walls of the tubular container between the said fasteners so as to separate the one container from the next. It is preferable to affix both fasteners simultaneously, but the severing may be delayed if desired.

It is also a feature of the invention to provide the machine with a socket to receive the leading portion of the charged tubular container. This socket preferably lies below the "former" and below the point at which the fasteners are affixed. The walls of the socket may be arranged to grip the outside of the charged container, the end support or supports in the latter offering sufficient resistance to prevent damage to the container, and said socket walls may be then rotated to twist the material and close the end of the container. In this case the said walls are preferably arranged to partake of longitudinal movement in relation to the "former", and such movement may either be definitely controlled or means may be provided to counterbalance by a screw or like means, or by a spring, or only by the weight of the socket and of the container being twisted, in order to maintain the requisite tension on the material of the tubular container as it is being twisted together.

The socket aforesaid may have a bottom to shape the ends of the containers as they are pushed down into the chamber by the mandrel, or the bottom may be omitted or may be removable. The said socket may be arranged to receive a cardboard or other receptacle into which the charged container would be thus received for subsequent transport.

The "former" may be provided with a contractable part to grip the tubular container during the closing operation and above the "former" there may be a filling tube leading from a cistern or hopper containing the charge.

For a more complete understanding of the invention there will now be described, by way of example only and with reference to the accompanying drawings, a vertical machine for manufacturing and charging containers with semi-liquid, liquid, powdery or granular materials according to the invention. It is to be understood, however, that the invention is not restricted to the precise constructional details set forth.

In these drawings:—

Figure 1 is a diagrammatic side elevation of the machine,

Figure 2 is a sectional elevation on the line 2—2 of Figure 1,

Figure 3 is a side elevation of the former,

Figure 4 is a front elevation of the disc-feeding mechanism,

Figure 5 is a section on the line 5—5 of Figure 4,

Figure 6 is a detail view of the disc-feeding slide,

Figure 7 is an end elevation of the lower end of the former,

Figure 8 is a plan of the wire-feeding mechanism and fastener-affixing die-members,

Figure 9 is a section on the line 9—9 of Figure 8,

Figure 10 is a plan of the two die-members detached from their operating mechanism,

Figure 11 is a sectional elevation on an enlarged scale on the line 11—11 of Figure 10,

Figure 12 is a sectional elevation on an enlarged scale on the line 12—12 of Figure 10,

Figure 13 is a side elevation partly in section of the twisting mechanism for closing the containers,

Figure 14 is an underside plan on the line 14—14 of Figure 13 showing the ratchet mechanism.

Figure 15 is a plan partly in section and drawn to a reduced scale, on the line 15—15 of Figure 13,

Figure 16 is a plan partly in section and on a reduced scale on the line 16—16 of Figure 13,

Figure 17 is a sectional elevation of a modified mandrel,

Figure 18 is a sectional elevation of another form of mandrel and showing the valve-operating gear,

Figure 19 is a section on the line 19—19 of Figure 18,

Figures 20–24 inclusive show various forms of containers,

Figure 25 is a section on the line 25—25 of Figure 24,

Figure 26 is a detail hereinafter referred to,

Figures 27–29 inclusive show further modifications in the containers,

Figure 30 illustrates a modification of the mechanism for feeding the material from which the fasteners are made,

Figure 31 is a sectional elevation showing how external attachments are applied to the containers, and,

Figure 32 is a sectional plan on the line 32—32 of Figure 31.

Like reference numerals indicate like parts throughout the drawings.

The material, hereinafter referred to as paper, from which the containers are to be made is led from a roll 1 beneath a guiding roll 2 to and through a stationary hollow former 3 to bring it to the shape of a tube. Within the said former a mandrel 16 is caused to reciprocate as and for the purposes hereinafter explained. It is obvious that when the paper 4 is being formed into a tube it passes between the former 3 and the mandrel 16. The paper 4 after leaving the roll 2 passes over a knife edge 5 at the top of the former 3. This knife edge is substantially the same width as the paper which is thus fed transversely to the axis of the former. This arrangement enables the former 3 to be kept as short as possible and facilitates the insertion of the charge and of the end supports hereinafter referred to.

The former 3 is of a type commonly employed for bringing flat paper to tubular formation, and its active folding edges may be caused to lap the paper, double fold it, crimp it, or make any desired type of longitudinal seam to the tubular container. As shown on the drawings, a simple lap joint 6 is formed on the tubular container.

A gumming device may be provided to gum the edge of the paper before it closes to tubular form. In the drawings, a pipe 7 for gum is shown against the open end of which the edge of the paper 4 is caused to press, but an ordinary roller gumming attachment may be employed. The gummed edge of the paper is pressed down to form the seam by a rubber-covered roller 8 mounted on an arm 9 secured to a shaft 10 which can pivot in brackets 11 on the frame of the machine. The roller 8 is held in operative position against the paper 4 when the tubular container is being drawn through the former 3, and is moved out of operative position when not required by a cam 12 on the main cam shaft 13 of the machine. The cam shaft 13 is rotated from a shaft 17 hereinafter referred to by bevel wheels 161 and 162. The cam 12 acts against a roller 14 mounted on a stem 15 secured to the shaft 10. If desired the roller 8 can be caused to crimp the seam of the tubular container when waxed paper is used for the container a heated steel roller may be provided instead of the gumming device to melt the wax along the edges of the paper and thus cause them to adhere to form the joint.

The mandrel 16 is virtually a plunger which is reciprocated from the shaft 17 which is driven from the main driving shaft 18 of the machine by gear wheels 19, 20 on said shafts respectively. To this end, there is mounted on the shaft 17, a cam 21 which actuates a rod 22 pivoted to a link 23. The other end of said link is pivotally connected to links 25 carried by a cross-head 26 which is secured to the mandrel 16 and which slides on guide-bars 27. The links 25 are also pivoted at 181 to a link 182 which is pivoted at 183 to the frame of the machine.

The functions of the mandrel 16 are, as will be apparent from the following description:—

(1) To draw, by direct pressure on the closed forward or leading end of the tubular container or by pressing the charge in front of it, the paper 4 through the former 3 to make the tubular container,

(2) To constitute a hard surface on which

the leading end of the tubular container can be closed,

(3) To pick up and insert in the tubular container, discs constituting the aforesaid end supports, and

(4) To act as a delivery tube if the charge is fed through it. The mandrel 16 conforms to the shape of the tubular container and it is essential that an air passage be provided through it to prevent pressure or vacuum effect in the containers. When charging containers with solid substances the mandrel need only be a plain plunger with an air passage therethrough, or it can be a loose fit within the tubular container. In machines for packeting granular materials, the mandrel may be a plain tube with means for packing one or two end supports, for example discs, as hereinafter explained. Liquids or semi-liquids are preferably fed through the mandrel in which case (unless the mandrel is grooved or is a quite loose fit in the tubular container to obviate it), it must have separate axial passages through it for the liquid or semi-liquid and for air and separate inlets thereto, the said passages being valve-controlled as hereinafter more fully explained.

The machine illustrated in the drawings is intended for packeting semi-liquid, liquid, granular, or powdery substances which are fed through the mandrel 16. A hopper 28 is mounted on the top end of the mandrel, and granular or powdery substances, may be delivered to the hopper 28 by a delivery chute 29 from an ordinary automatic weighing machine or otherwise.

Although in vertical machines the charge is preferably fed through the mandrel, it is to be understood that this is not absolutely essential.

Insertion of end supports in tubular container.

The end supports will be hereinafter for brevity referred to as discs. The discs, which will be assumed to be flat discs, are an easy sliding fit within the tubular container and unless grooved on their outer periphery must be provided with a hole to allow the passage of air through them. The discs 30 (Figures 4 and 5) are delivered into a magazine 31. In the vertical machine illustrated said discs automatically fall into an indent 32 adapted to receive them on a slide 33 which is caused to travel beneath said magazine and to carry the discs beneath the mandrel 16. The slide 33 is carried by an arm 34 which is pivotally mounted on a standard 35. A spring 36 tends to move said slide into position beneath the mandrel, and the slide is moved away from the mandrel into position to receive a disc from the magazine 31 by a cam 37 mounted on the cam shaft 13. It will be understood that, at the appropriate time, the slide 33 is moved away from the mandrel 16 beneath the magazine 31 and a disc falls onto the indent 32. The slide 33 then returns with the disc thereon beneath the mandrel and within the open part of the tubular container when the mandrel is in its top position. The mandrel 16 which is provided on its lower end face with pins 38 then drops sufficiently to peck the disc off the slide 33. A guide plate 181 is provided on the lower end of the disc magazine 31 to prevent the disc which is being fed to the mandrel 16 from springing upwards off the slide 33 due to the pressure of the remaining discs on the rear part of the edge of said disc as it is being carried by said slide from beneath the magazine.

Instead of employing the aforesaid pins, the disc may be caused to adhere to the mandrel by any other suitable means, for example by being jammed on a taper on the mandrel, or by means of adhesive material.

Two discs may be pecked at once by the mandrel 16, one for each end of the container, the upper one having a larger hole than the lower. In this case the discs would be arranged in the magazine 31 in pairs.

If desired for pecking purposes or to maintain the discs in position in the containers they may be gummed during the operation of feeding them to the mandrel 16. In order to gum the underside of the disc delivered from the vertical magazine 31, gum may be applied to the surface of the slide 33 by a gumming roller 200, and a top side of a disc may be gummed by a gumming roller 201 when the disc is resting on said indent and while being carried by the slide 33 from the magazine 31 to the mandrel 16. Thus if two discs are being fed at one operation, the underside of the lower one would be gummed by the slide 33 so that it will adhere to the bottom or leading end of the container, and the gumming roller 201 would gum the upper side of the other disc. By this means the discs can be accurately located in the containers if and when the ends are pressed flat against them.

It is not an essential feature of the invention to insert a disc or discs in the container, and the insertion varies according to requirements. For example, when packeting a single solid body, such as a loaf of bread, in a container the aforesaid discs are not essential. In the case of power-operated machines, however, one disc at the rear end of the charged container is certainly most desirable as it facilitates the gripping of the container for closing purposes and provides a substantially hard surface on which to close the end of the container. Moreover, when dealing with semi-liquids, the disc assists the "breaking" or parting off of the contents when the container is filled. If a disc is to be inserted at the forward end of the container, obviously it must be inserted before charging the container. It must therefore

be on the end of the mandrel before the mandrel descends to make the container and must be left at the bottom of the container, or the mandrel must after forming the container rise to its top position, peck a disc, descend to the bottom of the container and leave said disc there. The former procedure is preferable and essential if pins are provided on the mandrel to peck the discs.

The top disc can be on the mandrel while the container is being formed and the charge fed through it. This is desirable in the case of liquids or semi-liquids, or it may be lowered and left in position after charging which is essential for solid substances and preferable for granular substances.

If two discs, one at each end of the container are to be inserted, they can either be pecked and inserted independently or pecked together, carried to the bottom of the container, one left there, and the top one carried up on the mandrel and deposited at the top of the container. In this case, of course, the charging must take place through a hole in the top disc.

The release of the discs from the mandrel may be effected by means on the mandrel, or otherwise as hereinafter explained.

A machine for packeting granular or powdery substances may have a plain hollow mandrel as hereinbefore described when only one disc is to be inserted and that at the rear end of the container, or the mandrel may be provided also with an inner tube adapted to insert a disc at the forward end of the container as illustrated in Figure 17. In this arrangement a tube 39 is provided within the hollow mandrel 16 and the feed hopper 28 is secured to said tube. A collar 40 is fixed to the upper end of the mandrel 16, and a second collar 41 loosely surrounding the mandrel 16 is connected to the inner tube 39 by a pin 42 which can travel in a slot 43 in the said mandrel. Between the collars 40 41 is arranged a spring 44 of sufficient strength to withstand the attachment of a disc 45 by wedging, pinning or other means on the lower end of the tube 39. In the drawing the disc 45 which is to be inserted at the leading or bottom end of the container is shown as wedged on the tube 39 and for this purpose the end of said tube is tapered as shown at 46. A disc 47 pinned to the mandrel 16 constitutes the disc for the rear or top end of the container. The disc 45 is released by the upward movement of the tube 39 which is effected as hereinafter explained.

When pins such as 38 are employed to peck the discs it is necessary that a disc shall be on the mandrel 16 or the tube 39 before said mandrel or tube contacts with the bottom of the container as otherwise said pins would pierce the container, particularly if the end of the latter is flattened. It is not necessary, however, for a disc to be on the end of the mandrel when the closing of the upper end of the container takes place as the pins 38 are not then able to pierce the walls of the container. Consequently after the top disc is placed in position the mandrel 16 can rise or recede into position for the closing of the tubular container between it and said top disc or charged container and the closing can then be effected, or the mandrel can move upwardly to top position, peck a disc or discs and then descend and wait at the correct position for the closing operation.

The pecking of the discs and their insertion into the tubular container therefore can take place at different times in the sequence of operations, one sequence of which will be detailed hereinafter.

Magazine for receiving and closing containers.

In the machine illustrated in the drawings the closing of the containers is effected by twisting the charged container relatively to the remainder of the tubular container, which operation closes the top end of the charged container and the bottom end of the next following container. To this end there is provided a magazine 48 (Figure 13) mounted on a central spindle 49 and carrying a plurality of sockets 50. In the drawings three such sockets are shown but it is to be understood that any desired number may be provided. These sockets are brought alternatively beneath the former 3 to receive the container and primarily to grip it and twist it relatively to the tubular container from which it is made. They also serve to convey the charged container, after it has been closed and separated from the tubular container, from such position to where it can be further operated upon if required and finally be removed from the magazine.

The main operative position of each socket therefore is beneath and in axial alignment with the former and mandrel, although labelling and other operations may conveniently be performed whilst the container rests (gripped if desired) in a socket in another position.

Each socket 50 is adapted to receive a container as it is made, and has pivotally mounted thereon at its top end gripping jaws 51 adapted to grip the top disc in the container. As all the sockets and their operating means are similar only one will be described in detail. The socket 50 is mounted on a spindle 52 which can slide within a twisting and trigger tube 53.

Mounted externally and slidably on the socket 50 is a circular cam 54 between which and a flange 55 which is screwed to said socket and to the spindle 52 is a spiral spring 56, which spring when released causes the cam 54 to close the gripping jaws 51. Thus the said spring, cam and gripping jaws are all

mounted on the socket 50 and can move with it.

Attached to the spindle 52 at a position not covered by the twisting and trigger tube 53 and by a pin 57 is one end of a cord 58, preferably cat-gut, which cord passes around pulleys 59 and 60 and is secured at its other end to a weight 61 within a tube 62. If desired a compression spring, or the equivalent, may be provided to act as a buffer between the said weight and the bottom of the tube 62. At its upper end approximately half the twisting and trigger tube 53 is cut away so as to leave a substantially semi-circular portion 163, and said portion has a cam-like end 64.

Positioned also on the spindle 52 is a catch pin 63 which at certain operative positions is controlled by the aforesaid semi-circular portion 163 of the twisting and trigger tube 53. Fixed to the lower end of the tube 53 is a planet gear wheel 65 which is always in mesh with a fixed sun wheel 66 of greater depth than the wheel 65 and centrally mounted in a basin 67 beneath the magazine 48.

The twisting and trigger tube 53 is slidably mounted on the socket spindle 52 and in its bearing 68 in the magazine 48 and said tube 53 is controlled by a lever arm 69 pivoted at 70 to a boss 71 on the magazine 48, in which lever arm said tube is rotatable. The lever arm 69 at its outer end has a roller 72 which when the magazine 48 is intermittently rotated, as hereinafter explained, runs on a horizontal race on the upper edge of the basin 67, but which when the socket 50 is in operative position, that is under the mandrel 16, is taken onto and controlled by a circular dual-faced cam 73 mounted on the main camshaft 13 of the machine.

Pivoted also on the lever arm 69 is a connecting rod 74 operating a trigger 75 pivoted to a boss 76 on the magazine 48. The said trigger at certain times bears against a projection 77 on a fork-shaped lever 78 which operates on the aforementioned circular cam 54 controlling the gripping jaws 51 of the socket 50. It will be seen therefore that when a socket 50 is in operative position beneath the mandrel 16, the dual-faced cam 73 controls the sliding movement of the twisting and trigger tube 53 and through the connecting rod 74, trigger 75 and forked lever 78 also at the same time controls the gripping jaws 51.

The magazine 48 is rotated intermittently by a ratchet mechanism from the main cam shaft 13 to bring the sockets 50 into and out of operative position beneath the mandrel 16. This ratchet mechanism comprises a cam 79 which is mounted on the main cam shaft 13 and which through a roller 80 actuates a link 81 connected to an arm 82 pivotally mounted on an axle 83 in the bottom of the basin 67. The arm 82 carries a pawl 84 which engages a toothed wheel 85 secured to said axle and meshing with a gear wheel 86 on the spindle 49 of the magazine 48. A spring 168 acts to maintain the pawl 84 in engagement with the wheel 85 and also to return the link 81 and arm 82 to their normal position.

Obviously it is necessary to ensure that each socket is brought and maintained axially centrally beneath the mandrel, and to this end a spring-controlled stop pawl 286 mounted on the magazine basin 67 is provided to engage with notches 164 on the magazine 48. It is desirable to turn the magazine through such an angle that the socket 50 is moved somewhat past its central position beneath the mandrel 16 and then to turn it back until one of said notches 164 thereon engages the stop pawl 286 which then holds the sockets centrally beneath the mandrel. The aforementioned weights 61 tend to cause this backward movement but to ensure it, a spring-controlled pin 87 is fitted on the lower face of the dual-faced cam 73 which pin jams the roller 72 between it and the opposing face of the cam 73. As said cam rotates in the opposite direction to the direction in which the magazine 48 is turned by the ratchet mechanism the magazine is definitely pulled back and as it comes against the aforesaid stop pawl 86, the spring-controlled pin 87 is depressed and allows the roller 72 and consequently the socket 50 to stop in the exact central position beneath the mandrel 16.

The aforesaid horizontal race on the upper edge of the basin 67 is formed with two levels, for a purpose hereinafter explained, and the magazine 48 has three sockets 50. Each socket has three positions in which it remains stationary whilst a container is being charged and closed, viz:

(1) the operating position under the mandrel 16,

(2) 120° further on in which position the roller 72 is on the low level 88 of the aforesaid race and, as explained hereinafter, the grippers 51 are still gripping the disc at the top of the charged container.

(3) a further 120° round said race when the roller 72 is on the high level 89 of the race, and the grippers 51 have released the container 50.

The circular dual-faced cam 73 has similarly two levels, namely a high level 90 corresponding and flush with the high level 89 on the basin race and on to which runs the roller 72 of the socket which is coming into operative position beneath the former 16 with its gripping jaws 51 open, and a low level 91 which delivers the roller 72 of the charged socket as the magazine 48 is ratcheted round on to the low level 88 of the basin race. During this movement the grippers 51 are still gripping the charged container, and it will be appreciated that the rise in levels of the basin race takes place between the second and third positions of the socket. The object of

this is that at the said second position while the container and the top disc therein are still gripped by the grippers 51, the operator can depress the convex top end of the charged container and do any labelling or marking desired. In the third position, the grippers being open, the charged container can be taken out of its socket, and to facilitate this thumb or finger holes may be provided in the socket if desired.

It will be understood that each socket 50 and spindle 52 has a corresponding weight 61, and as the magazine 48 ratchets round to bring each socket into and out of operative position, the planet gear wheel 65 on the twisting and trigger tube 53 is rotated owing to its being in mesh with the fixed sun wheel 66. Consequently the tube 53 which is integral with the gear wheel 65 is also rotated and as by this time the edge 165 of the semi-circular portion 163 of the tube 53 has engaged the catch pin 63 on the spindle 52, it rotates the said spindle with it and the cord 58 is coiled on said spindle, thereby pulling up the weight 61 in the tube 62. The number of turns of the cord 58 on the spindle 52 is determined by the ratio of the planetary wheels 65 to the sun wheel 66, three or four turns generally being sufficient. In this way by the time each socket 50 comes into operative position beneath the mandrel 16, it is set for tripping and twisting to close the top end of the charged container and the bottom end of the next following container.

The bottom of the socket 50 is formed, as shown at 92, so as to flatten or otherwise shape the lower end of the container against the mandrel 16 or the disc in the container as the mandrel comes to its lowest position. Conveniently the covex end of the container is pushed inwards so that the closed end is within the container, thus making a flat end on which the container can stand, or to which a label may be attached.

The operation of each socket 50 when in operative position beneath the mandrel 16 is as follows:—Each socket arrives in this position with the gripping jaws 51 open, and with the cord 58 set ready to turn the spindle 52 and consequently the socket 50, gripping jaws and cam 54 thereon. As the dual-faced cam 73 rotates, it firstly by means of the spring-controlled pin 87 ensures that the socket 50 is central under the mandrel, and as the said cam continues to rotate the roller 72 travels down the declined face of the cam and through the connecting rod 74, trigger 75 and fork-shaped lever 78 releases the circular cam 54 from the lower ends 93 of the gripping jaws 51. The cam 73 is so timed that the mandrel 16 is at the correct height, and therefore the top disc in the container is gripped in the socket 50 by the jaws 51. As the cam 73 continues its rotation the lever arm 69 is further depressed, the cam 54 comes against a stop 94 on the socket 50, and the trigger 75 moves away from the projection 77 on the forked lever 78 until it is clear of the path of the said projection. The socket 50 and lever 78 can then lift free of the said trigger. During this time, however, the twisting and trigger tube 53 has been moving downwards, and by the time the mandrel 16 has travelled far enough away from the socket 50 to allow for twisting to take place, the cam-like end 64 of the tube 53 is just on the point of tripping. Further downward movement of said tube causes the pin 63 to trip over the aforesaid edge 165 and the weight 61 which has been lifted, as previously explained, by the ratcheting round of the magazine 48, immediately exerts through the cord 58 as it unwinds a twisting motion on the spindle 52, and consequently twists the socket 50 and charged container held by the gripping jaws 51 in relation to the tubular container in the former 3 which is held from twisting or pulling through.

In order to hold the tubular container during this operation the lower end of the former 3 is cut away for about half its diameter as shown at 203, Figure 3. In the space thus provided a contractible portion 95, see also Figure 9, is arranged to clamp the tubular container between itself and the mandrel 16 which constitutes an abutment within the web of material from which the tubular container is made. The main body part of this contractible portion is semi-circular and has a projecting portion 295 which is shaped so as to surround with sufficient clearance the lower end 296 of the former 3. Integral with the portion 295 is an arm 187 which is supported from the frame of the machine by studs 287 mounted in slots 288 in the arm 187 so as to permit endwise movement of said arm. The contractible portion 95 is held in its operative position away from the mandrel by a cam 185 on the shaft 13 which bears against a roller 186 mounted on the arm 187 and is brought into its operative position by springs 184. These springs are arranged one on each side of the arm 187 and each is connected at one end to a stationary support 284, and at its other end to the projecting part 295 of said contractible portion.

During the aforesaid twisting operation the socket 50 rises considerably and not only twists the charged container relatively to the remainder of the tubular container, but when the coils of the cord 58 on the spindle 52 are unwound, it holds said container with the end twisted tightly until fasteners have been secured around the twisted portion and the latter severed from the tubular container. It will be clear that this twisting operation produces a conical end 96 at the top of the charged container, a conical end 97 at the lower end of the next following container, and a cylindrical twisted portion 98 between said conical ends. The dies for securing a fastener

or fasteners around the twisted portion 98, as hereinafter explained, preferably hold on for a period but are ultimately released, and then the charged container and the socket 50 fall again wholly or partly into the magazine 48.

The twisting as before mentioned necessitates that the sockets 50 shall rise towards the mandrel 16, and careful adjustment of the counterbalancing of the weight of the socket and contents of the container for example by the direction of the pull of the coiling rope 58 for different materials is necessary to avoid damage to the containers, and whilst ensuring a tight twist to secure the desired angle of the convex ends of the containers.

The rate of acceleration of the rise of the socket 50 is not even, the first half being found to be approximately half the total lift if three or four turns of the cord 58 are wound on the spindle 52. It is found desirable, therefore, to assist this first half turn by shaping the end 64 of the twisting and trigger tube 53 to the correct curve to lift the spindle 52 this distance. The cord 58 is arranged to coil above the point at which it is attached to the spindle 52, by positioning the pulley 59 so as to coil it in a spiral above said point. It is required that the coiling of the cord 58 shall take place when the socket 50 is in its lowest position in the magazine 48, and the unwinding of the coil during the lifting movement. It is possible, therefore, by adjusting the height of the pulley 59 to assist the lifting to any desired extent during the twisting. Furthermore, the cord 58 may be attached to the spindle 52 by a transversely projecting pin 57 attached to the spindle 52, thus causing a sharp pull at the end of the twist and, which is sometimes desirable, an upward lift to the socket 50 which brings the closed ends of the containers closer together and makes shallower convex ends on the containers. If such upward assistance causes the socket 50 to fail to return to its correct position in the magazine 48, it is immaterial as in any case it will be pressed down by the forked lever 78 pressing on the cam 54, which in any case has fallen sufficiently far for the projection 77 to be in the path of the trigger 75, as the latter is brought into operating position by the cam 73 lifting the roller 72 to the low level of the race on the basin 67.

The angular position of the pin 63 on the spindle 52 and the pin 57 holding the cord 58 is predetermined to allow the spindle 52 to drop in front of the semi-circular portion 163 of the twisting and trigger tube 53. This is effected by firstly ensuring that each socket 50 when it comes to operative position is in the same angular position—the number of teeth on the planet wheels 65 being made an equal division of the number of teeth on the sun wheel 66 causing this—and secondly by determining the point of attachment of the cord 58 to the spindle 52 so that it must return to the same position when the rope is uncoiled. Furthermore, a slight fractional variation of the number of coils is possible by the meshing of the teeth of the planet wheels 65 with those of the sun wheel 66, whilst, of course, still allowing the socket spindle 52 to drop clear of the edge 165 of the twisting and trigger tube 53.

Each gripping jaw 51 is preferably made with a projecting lip 99 to rest on top of the disc so as to prevent slip in twisting, the end of the mandrel 16 being reduced so that said jaws will not grip it. The actual gripping may be timed to occur whilst the mandrel 16 is caused by the cam 21 to rest in correct position for that operation, or if, as in the case of charging the containers with liquids or semi-liquids, the top disc is first taken to the bottom of the container, it may be caught by the projecting lips 99 of the gripping jaws as the mandrel 16 rises steadily from its bottom position to the twisting position. In this case the cam 54 which actuates the gripping jaws may be provided with two steps 100 and 101, the first step putting the grip half on so that the lips 99 of the grippers come into the path of the disc as it moves upwards on the bottom of the mandrel 16 within the container and pull said disc off therefrom, the second step 101 of said cam then putting on the final grip. This obviates the arresting of the mandrel 16 in its travel upwards, and as the half grip can be on for some time before the disc reaches the projecting lips 99, the very fine accuracy of timing which would otherwise be necessary is obviated.

Affixing fasteners and separating containers from the tubular container.

At the point where the aforesaid cylindrical twisted portion 98 is formed, a fastener or fasteners is or are applied and the charged container is severed from the tubular container. It is preferred to apply two fasteners and sever said twisted portion between them, so that one fastener secures the top end of the charged container and the other fastener secures the bottom end of the next following container.

Any type of tying gear for dual cotton or string clips, or two tapes or metal strips or two wires may be employed.

In the machine illustrated in the drawings scissor-like knives and fastener closing dies are comprised in one set of die-members and the fasteners are two clips formed from two wires by the mechanism more particularly illustrated in Figures 8–12 inclusive. Two wires 102, 103 are fed separately from a swift 166 under and over a series of straightening rolls 104 and between feeding rollers 112, 113 to a swivelling feed arm 105 provided with a groove for each wire to maintain them at the desired distance apart, in which grooves said wires are quite free to slide. The arm 105

is pivotally mounted at 106 on the frame of the machine and is caused to turn in the direction of the arrow in Figure 8, against the action of a spring, by a cam 107 on the main cam shaft 13. The cam 107 acts on a roller 108 mounted on a slotted link 109 which is connected by a link 110 to said feeding arm.

The pivot 106 on which the feeding arm 105 turns is situated relatively to the final wire feeding roller 113 so that the ends of the wires 102 and 103 are drawn further away from the roller 113 as the feeding arm 105 travels away from the clip-applying position shown in full lines in Figure 8. Preconceiving therefore, that the ends of the wires 102, 103 are prevented from being drawn back into their grooves in the feeding arm 105 by being bent over the end 114 of said arm, the aforesaid movement of the arm 105 will draw the wires 102, 103 between the rollers 112, 113. At the back side of the feeding roller 113 is a rigid stay 111 to prevent backward movement of the wires through the rollers 112, 113. Consequently when the distance between the stay 111 and the end of the feeding arm 105 is again shortened, that is when said feeding arm moves anti-clockwise, the excess lengths of wire being free to slide through the grooves in said arm will gradually be protruded through the end 114 of the arm. The extent of this movement is predetermined to the correct amount and can be varied by adjustably mounting the end portion 114 of the feeding arm 105 on the main portion of said arm.

The fastening and severing device comprises two co-operating die-members 115, 116 which are both mounted on a pivot pin 117 carried by a plate 118 controlled by a spring 119 and pivotally mounted on the standard 35. Within the die-members 115, 116 (see Figures 11 and 12) are mounted upper co-operating dies 124 and similar lower dies 125, and centrally between said upper and lower dies are mounted scissor-like blades 126. In the die-member 115 is also mounted a shearing blade 127, all for the purpose hereinafter explained. The plate 118 with the die-members thereon is brought into operative position against the action of said spring by a cam 120 on the shaft 13 acting against a roller 121 on said plate. Also mounted on the main cam shaft 13 is a cam 122 which acts on the rear end of the die-member 115, and a cam 123 which acts on the die-member 116. These cams cause the die-members 115, 116, when the twisted portion 98 of the container is therebetween, to perform three actions namely:

(1) the cutting of the twisted portion 98 of the tubular container by the scissors blade 126,

(2) the shearing of sufficient wire off the ends of the wires 102, 103 by the blade 127 to form the clips, and

(3) the bending or completion of the bending of the ends so cut off into clips and affixing them round the said twisted portion by the dies 125, 125.

The end 114 of the feeding arm 105 is adjustably positioned from the shearing blade 127 and from the die-members 115, 116 so that after the clips have been cut from the wires 102, 103, sufficient lengths of wire protrude from said ends to form the next clips. After the wires have been sheared off and before the die-members 115, 116 move away from their operative position, the feeding arm 105 is turned clockwise as shown in Figure 8 and the ends of the wires 102, 103 are bent over substantially at right angles to the end 114 of the arm 105 by contact with the face 128 of the die-member 116 and said wires are drawn backwards through the feed arm 105, the bent ends of said wires being drawn tightly against the end 114 of the arm 105 as shown at 129 in Figure 8. The bent-over ends of the wires 102, 103 are brought into the path of a bending pecker 130 which is then caused to close over said bent ends and thus complete the bending of these ends into hooks as shown at 131. The pecker is maintained in its inoperative position by a spring 132 and is actuated at the correct time by a projection 133 on the cam 120 which through the roller 121 causes a pin 134 to engage a recess 135 in the pecker 130 and momentarily depress said pecker.

When the feeding arm 105 returns, that is moves anticlockwise in Figure 8, the said hooked ends are protruded from the end 114 of said arm sufficiently far to allow the hooked ends to pass beyond the twisted portion 98 of the tubular container. The angular movement of the arm 105 being continued the inner sides of the hooks are caused to press snugly against said twisted portion.

As the die-members 115, 116 are brought into operative position, the die-member 116 presses end-on against the hooked ends of the wires 102, 103 and pushes them against the twisted portion 98 of the tubular container (the excess wires bulging between the end 114 of the arm 105 and the stay 111) after which said hooked ends are sheared by the blade 127 and formed into clips by said dies. The scissors blades 126 then cut the twisted portion 98 between said clips.

The dies 124, 125 and the blade 127 are preferably grooved to centralize the wires when being bent, and the scissors blades 126 are preferably so shaped and located as to draw the twisted portion 98 of the tubular container to the back of the dies 124, 125.

It is preferred that both die-members 115, 116 should be movable but this is not absolutely essential.

When waxed paper is employed for the containers it is not essential to affix fasteners as hereinbefore described, but the dies aforesaid may be heated so that they will melt the wax

of the twisted portion 98 and as the wax congeals it will bind closely together the folds of said twisted portion.

Modified mandrel for charging containers with liquids or semi-liquids.

As hereinbefore explained when liquids or semi-liquids are fed through the mandrel separate valve-controlled axial passages must be provided therein. In order to prevent connection between the two passages, particularly as the liquids or semi-liquids would probably be under slight pressure and some suction or pressure effect would be likely to occur in the air passage, means are provided to ensure that when one valve is closed the other is open and vice versa. A suitable construction is shown in Figures 18 and 19. The hollow mandrel 16 has within it a tube 39 which is open at its top end to the atmosphere. The tube 39 constitutes the air passage, and the charge is fed into the annular passage 136 between said tube and the mandrel 16 through a pipe 137 preferably under pressure. Screwed to the lower end of the mandrel 16 is a cap 138 having a seating 139 for a valve 140 controlling the annular passage 136, which valve is hereinafter referred to as the charge valve. The valve 140 is screwed to the tube 39 and has three radial arms 141 by which it is guided longitudinally in the mandrel 16. On the lower end of the valve 140 is formed a seating 142 for the air valve 143 which is fixed to a rod 144. The said rod is guided in the tube 39 by radial arms 145, and between the radial arms 141 and a collar 146 abutting against a shoulder 167 in the interior of the mandrel 16 is a spring 147. Fixed to the upper end of the air valve rod 144 is a double-flanged collar 148, and between the flanges of said collar is disposed a forked-lever 149 which is pivoted at 150 to an open-ended casing 151 screwed to the end of the mandrel 16. Integral with the forked-lever 149 is an arm 152 and pivoted to said arm at 153 is a trip catch 154. A spring 155 fixed at one end to the arm 152 and at its other end to a pin 156 on the casing 151 tends to maintain the valve rod 144 depressed and the air valve 143 open. In this position the forward end of the trip catch 154 rests on a projection 157 on the casing 151.

The operation of this device is as follows: Assume that the mandrel 16 has pecked the disc 47 for the top end of the container and the disc 45 (shown in dot and pick lines in Figure 18) has been wedged on the valve 143. The mandrel 16 then descends and the bottom of the air valve 143 with the disc 45 thereon strikes against the bottom of the socket 50 which is then in operative position beneath the mandrel. This action causes the air valve rod 144 to move upwardly and close the air valve 143. At the same moment the air valve lifts the charge valve 140 off its seat 139 against the action of the spring 147 and the charge can flow into the container. During this upward movement of the air valve rod 144 and just before the charge valve is opened, the disc 45 strikes against the disc 47, is forced off said valve and deposited at the bottom of the container in the socket 50. The mandrel 16 then commences to rise carrying with it the casing 151 and valve gear mounted thereon, but the air valve 143 is held closed and consequently the charge valve 140 open as the forward end of the catch 154 has tripped over the edge of the projection 157. The said valves are held in this position until the mandrel 16 has risen sufficiently for the rear end of the catch 154 to strike against a disc 158 fixed on the main cam shaft 13. When this occurs the said rear end is depressed and the spring 155 is free to turn the arm 152 in an anti-clockwise direction, thus through the forked lever 149 causing the valve rod 144 to descend and the air valve 143 to open. At the same instant the charge valve is closed by the spring 147. It will be observed that only the air valve rod 144 needs to be operated; the charge valve 140 being automatically opened and closed.

If desired, the air valve 143 instead of being closed by contact with the bottom of the socket 50 as described above may be actuated by an arm 159 connected to the forked-lever 149 contacting with a trip 160 located within the path of said lever arm when the mandrel is at or near its lowest position, as shown diagrammatically in dot and pick lines in Figure 18.

From the foregoing description it will be clear that in the arrangement shown in Figure 17, as soon as the inner tube 39 with the disc 45 thereon strikes against the bottom of the socket 50 it is caused to rise against the action of the spring 44 and said disc when it meets the disc 47 will be forced off the tube 39.

Operation of the machine.

Briefly the operation of the machine illustrated in the drawings is as follows:—It will be understood that all the cams are so timed as to ensure the correct sequence of operations. The paper 4 is led from the roll 1 through the former 3 in which it is brought to the shape of a tube with a longitudinal seam, one edge of the paper being gummed and pressed onto the other edge by the roller 8 against the mandrel 16 which is then within the tubular container. The mandrel then rises, pecks a disc from the slide 33 which has been moved beneath said mandrel and descends to the bottom of the container, the leading end of which has entered the socket 50 in the magazine 48 ready to receive it. The bottom end of the container is forced by the mandrel 16 against the bottom of said socket and flattened thereby and the mandrel then

ascends while charging of the container takes place through the mandrel. As soon as the mandrel 16 has risen sufficiently for the jaws 51 to grip the disc they close and the mandrel continues to ascend leaving the disc at the top of the charged container. The clamping portion 95 of the former then grips the tubular container to the mandrel and the twisting gear is actuated to close simultaneously the rear end of the charged container and the leading end of the next following container. During the aforesaid operations the die-members 115 and 116, and the wire feeding arm 105 have been clear of the tubular container. They next come into operation, affix two wire clips around the twisted portion 98 of the tubular container and said portion is cut between the clips. The die-members 115, 116 and the feeding arm 105 then separate slightly and the charged container in the socket 50 is then moved by the partial rotation of the magazine 48 into the second position in which the upper end of said container, still gripped by the jaws 51, may be flattened and have a label applied thereto manually. During the movement of the magazine bringing said charged container to the third position, the gripping jaws 51 are released and the container can then be removed from its socket by an operator. This sequence of operations is then repeated for the next container and so on.

From the foregoing description it will be clear that several forms of containers may be made by a machine according to the invention. For instance, as shown diagrammatically in Figure 20, a container may be formed having two convex twisted ends 96 and 97 each secured by a wire clip 169 around the aforesaid cylindrical portion 98, and with or without an interior disc or discs. Obviously if desired the cylindrical twisted portion 98 at one or both ends of the container may be sprayed out fan-wise, as shown at 193 in Figure 29. Or, as shown in Figure 21 the bottom of the container may be flattened against the disc 45 and the cylindrical portion 98 be pushed through a hole 170 in said disc. An alternative method of applying a label to the bottom of the container is to gum said label and insert it manually with the wet gum side upwards in the socket 50 so that as the mandrel 16 descends it will press the bottom of the container onto the gummed label. In this case the socket 50 may have a flat bottom and the end of the mandrel 16 (or the disc thereon) would be recessed or provided with a hole to allow the closed end of the container to recede within it.

The container shown in Figure 22, has an end support at the top in the form of a spout 172 which is enclosed in the convex end 96 of the container in the process of forming the latter. In this construction any material surrounding the upper end of the spout 172 can be torn away and the spout exposed for emptying purposes.

If desired, the containers may be provided with external attachments (for example one or more strands of wire, string or ribbon) for the purposes hereinafter set forth.

As shown in Figures 31 and 32 the strands of wire 210 are fed around pulleys 211 and are led into the former 3 through slots 212 at a point lower than that at which the tubular container has been formed and the former 3 is provided with grooves 213 to receive said strands. The various parts which operate subsequently on the container will be similarly grooved to accommodate the strand or strands of string or wire.

It will be appreciated that if the lower end of the former 3, the contractible portion 95, and the gripping jaws 51 are suitably grooved to accommodate the external attachments, such as the wires 210, then when the said contractible portion is in its operative position and the top disc in the container is gripped by said gripping jaws and the twisting gear is actuated to close the charged container, said external attachments will be caused to contract centrally about the axis of the tubular container and will become twisted with the wall of the latter.

The socket 50 which receives the leading portion of the charged tubular container can be caused to be always at the same angular position when ready to receive a container. Consequently by suitably grooving said socket and the gripping jaws 51 thereon, one or more strands of wire or string can be drawn through the former 3 by the mandrel 16 and will always be in correct position to engage said grooves.

The purposes of these external attachments are numerous; in the case of ribbon they may be employed for decorative or advertising purposes. A single longitudinal strand of string secured to both ends of the container would form a convenient handle-loop. If the containers are filled with semi-liquids, for example grease, and are intended to act as refills to be deflated concertina fashion, for example in grease guns, when one end clip or fastener is detached and the filled container is inserted in and deflated to empty the contents into the grease gun, the string which is still fastened to the rearward end of the container would serve to withdraw the empty crinkled-up container from the grease gun. It is obvious that the containers may be used for many commodities other than grease for grease-guns and in any suitable outer receptacles; the aforesaid string obviates a loose top to such receptacles.

Furthermore, external longitudinal wire ties would serve to stiffen the walls of the containers particularly if filled with semi-liquids or liquids such as milk, and they would also strengthen and stiffen the ends

of the containers so that they could be stood up thereon.

Another important purpose of these external wire atachments is that they may be caused to grip the discs which are inserted at one or both ends of the container. Figure 23 shows a container having a plurality of wires 173 on its exterior. If a disc 45 is inserted in the bottom end of the container it may be caused to wedge in the wire cage formed by the wires 173 by reducing the depth of the wire-receiving grooves at the bottom of the socket 50—the mandrel 16 being correspondingly grooved—thus producing a slight taper at the bottom of the container as shown at 174. At the top end of the container, the wires 173 may be indented slightly by the gripping jaws 51 on the socket 50 just in advance of the disc 47 to form a seating 175 therefor. Thus the wire cage would locate the discs at the ends of the container. The wires 173 at the ends of the containers may be twisted if that operation is performed on the container, at the same time as the container proper, and said ends would be closed and may be fastened by wire clips 169 or otherwise and severed in the same manner as in the case of a plain container.

Such a wire-cage external attachment, is particularly desirable for containers for liquids and would provide a very cheap and serviceable container for expandable milk bottles. The bottom end would be flattened between the end of the mandrel 16 and the bottom of the socket 50, whether or not an interior disc 45 is provided, and the top end of the container with the disc 47 therein would be left conical in form as shown at 96. In order to obtain the contents all that is necessary is to pierce the container between the closed top end 98 and the adjacent disc 47 when the contents could be poured through the filling hole 176 in said disc, and the said pierced hole without fear of bursting the container or of the contents being spread as they are poured out.

Moreover, the containers during their formation may be made with a shoulder at the top or rear end as shown at 177 in Figure 24, against which shoulder the top or rear disc 47 rests. The main body of the container is of smaller diameter than this shoulder or than that of the tubular section from which the container is formed. In order to produce such a container, the mandrel 16 as shown diagrammatically in Figure 26 may have its lower or forward end 178 reduced in diameter for a length corresponding to the length of the container from its bottom or front end to the shoulder 177. The socket 50 would be of a diameter corresponding to the diameter of the end 178 of the mandrel, and be provided with a shoulder 179 at or near its top or rear end. It is then preferable to make said socket in the form of a split die to facilitate the removal of the container and to depend upon it gripping the disc 47 instead of providing gripping jaws such as 51 on the socket.

As the reduced portion 178 of the mandrel 16 presses the container into the socket 50, the diameter of the container is reduced and longitudinal folds 180 are formed thereon on account of the excess paper see especially Figure 25. The upper or rear part of the mandrel 16 which is of larger diameter when it reaches its lowest position is brought onto the shoulder 179 and so forms the recessed shoulder 177 in the container in which the top or rear disc 47 is jammed. This construction allows of great pressure in charging the container and provides a shoulder container which is sometimes desirable for refills.

If desired, a liner 194 (Figure 27) made of papier-mâché or compressed cardboard may be inserted in the container to strengthen the container, or a shield 195 (Figure 28) may be provided on the outside of the container for the same purpose. In the latter case, the shield 195 may be placed in the socket 50 before the container is pushed thereinto and may be gummed interiorly so that the container will adhere thereto, or the gripping jaws 51 may be arranged to bend the shield over the disc 47.

According to another feature of the invention, if it is desired to make the containers of a plurality of layers of paper or other material, two or more layers of like or unlike material are led through the former 3 and operated upon as a single layer, the necessary space being left between the mandrel 16 and the former 3 to allow the said layers to pass therebetween. Similarly, one or more strips of material for decorative purposes or carrying advertising matter may be fed through the former with the material of which the container is made, and if desired be twisted and fastened with the ends of the containers.

It is to be understood that the invention is not confined to machines embracing all the features hereinbefore set forth, nor to the precise constructional details described and/or illustrated. Also if desired the gumming mechanism might be omitted, the former 3 merely forming a folded seam.

Furthermore mechanical means other than the twisting mechanism described may be employed to close the containers.

Instead of using wire for forming the clips as hereinbefore described with reference to Figures 8–12, flat strip metal may be employed. Also, it is obvious that means other than that previously described may be provided for feeding the material from which the fasteners are to made to the fastener-forming dies. For example, as shown in Figure 30, two flat metal strips 182, 183 may be fed separately between grippers 184, 185 to the feeding rollers 112, 113 which are pro-

vided with grooves to maintain the strips 182, 183 at the desired distance apart. These grooves are of such a depth that the said strips project slightly beyond the periphery of the rollers. The strips 182, 183 pass from the roller 113 to the swivelling feed arm 105 each through a guide tube 186 pivoted at 187 to the arm 105. The stay 111 instead of being rigid as in the construction shown in Figure 8 is spring-controlled and mounted on a pivot 188, a spring 189, tending to hold the stay in contact with the strips 182, 183. Backward movement of the strips 182, 183 is prevented by the grippers 184, 185. Each of these grippers is pivoted at 190 to the frame of the machine and is controlled by a spring 191 which is bent around the pivots 190 and pins 192 on the grippers, the grippers being so arranged that the strips can be drawn freely between them in the direction of the arrow in Figure 30 but are held thereby against movement in the reverse direction.

The containers manufactured according to the present invention may be employed in any suitable outer receptacles such as those constructed according to British specification No. 234,184.

I claim:

1. Apparatus for manufacturing and charging containers, wherein a web of flexible material is led from a supply roll through a former to bring it to the shape of a tube, the forward end of the tubular container so formed is closed, and the tubular container is charged through its open end, comprising means adapted to cause all parts of the wall of the tubular container at the rear of the charge to contract centrally about the axis of the container so as to form a contracted portion, and means whereby a fastening device additional to the main body of the said tubular container is applied to said contracted portion without itself actually causing the contraction.

2. Apparatus for manufacturing and charging containers, wherein a web of flexible material is led from a supply roll through a former to bring it to the shape of a tube, the forward end of the tubular container so formed is closed, and the tubular container is charged through its open end, comprising means adapted to cause all parts of the wall of the tubular container at the rear of the charge to contract centrally about the axis of the container so as to form a contracted portion, and means for applying two fasteners spaced apart to the contracted portion of the wall of the container so as to fasten simultaneously the rear end of the charged container and the forward end of the next container to be charged.

3. Apparatus for manufacturing and charging containers, wherein a web of flexible material is led from a supply roll through a former to bring it to the shape of a tube, the forward end of the tubular container so formed is closed, and the tubular container is charged through its open end, comprising means adapted to cause all parts of the wall of the tubular container at the rear of the charge to contract centrally about the axis of the container so as to form a contracted portion, means for applying two fasteners spaced apart to the contracted portion of the wall of the container so as to fasten simultaneously the rear end of the charged container and the forward end of the next container to be charged, and means to sever said contracted portion between the two fasteners so as to separate the charged container from the remainder of the tube.

4. Apparatus for manufacturing and charging containers, wherein a web of flexible material is led from a supply roll through a former to bring it to the shape of a tube, the forward end of the tubular container so formed is closed, and the tubular container is charged through its open end, comprising a mandrel, means to impart relative longitudinal movement to the former aforesaid and the mandrel so as to cause the web of material to be fed through the former to form the tubular container, means adapted to cause all parts of the wall of the tubular container at the rear of the charge to contract centrally about the axis of the container so as to form a contracted portion, and means whereby a fastening device additional to the main body of the said tubular container is applied to said contracted portion without itself actually causing the contraction.

5. Apparatus for manufacturing and charging containers, wherein a web of flexible material is led from a supply roll through a former to bring it to the shape of a tube, the forward end of the tubular container so formed is closed, and the tubular container is charged through its open end, comprising a mandrel, means whereby at the desired times said mandrel is moved to cause pressure to be exerted against the closed end of the tubular container and thus force the web of material through the former aforesaid, means adapted to cause all parts of the wall of the tubular container at the rear of the charge to contract centrally about the axis of the container so as to form a contracted portion, and means whereby a fastening device additional to the main body of the said tubular container is applied to said contracted portion without itself actually causing the contraction.

6. In apparatus for manufacturing and charging containers wherein a web of flexible material is led from a supply roll between a former and a mandrel to bring it to the shape of a tube, the forward end of the tubular container so formed is closed, and the tubular container is charged through its open

end, the combination of a mandrel provided with a conduit through which the charge is fed into the tubular container, and with a separate passage constituting an outlet for air from the container, means adapted to cause all parts of the wall of the tubular container at the rear of the charge to contract centrally about the axis of the container so as to form a contracted portion, and means whereby a fastening device additional to the main body of the said tubular container is applied to said contracted portion without itself actually causing the contraction.

7. Apparatus for manufacturing and charging containers wherein a web of flexible material is fed from a supply roll between a mandrel and a former to bring it to the shape of a tube, the forward end of the tubular container so formed is closed, and the charge is inserted into the tubular container through its open end, comprising a mandrel provided with a charging conduit and a separate outlet passage for air from the container, valves controlling said air passage and the charging conduit, means operatively connected to said valves to ensure that when one valve is closed the other is open and vice versa, means adapted to cause all parts of the wall of the tubular container at the rear of the charge to contract centrally about the axis of the container so as to form a contracted portion, and means whereby a fastening device additional to the main body of the said tubular container is applied to said contracted portion without itself actually causing the contraction.

8. Apparatus according to claim 7, comprising a valve controlling the charging conduit which is normally maintained closed by a spring, a seating on said charge valve for an air valve, air-valve controlling gear normally holding open said air valve, means to close the air valve and consequently open the charge valve, and means which at the required time will act on said controlling gear to close the air valve and thereby open the charge valve.

9. Apparatus for manufacturing and charging containers wherein a web of flexible material is formed into a tube, the forward end of the tubular container so formed is closed, and the tubular container is charged through its open end, comprising the combination of a former, a device that is disposed within said former and around which the tubular container aforesaid is formed, means for feeding supports to said device, means whereby said supports are taken by said device and inserted within the tubular container, means adapted to cause all parts of the wall of the tubular container at the rear of the charge to contract centrally about the axis of the container so as to form a contracted portion, and means whereby a fastening device additional to the main body of the said tubular container is applied to said contracted portion without itself actually causing the contraction.

10. Apparatus for manufacturing and charging containers wherein a web of flexible material is formed into a tube, the forward end of the tubular container so formed is closed, and the tubular container is charged through its open end, comprising the combination of a former, a device that is disposed within said former and around which the tubular container aforesaid is formed, means for feeding supports to said device, means for gumming the supports as they are being fed thereto, means whereby said supports are taken by said device and inserted within the tubular container, means adapted to cause all parts of the wall of the tubular container at the rear of the charge to contract centrally about the axis of the container so as to form a contracted portion, and means whereby a fastening device additional to the main body of the said tubular container is applied to said contracted portion without itself actually causing the contraction.

11. Apparatus for manufacturing and charging containers, wherein a web of flexible material is led from a supply roll through a former to bring it to the shape of a tube, the forward end of the tubular container so formed is closed, and the tubular container is charged through its open end, comprising a socket to receive the leading portion of the charged tubular container, means to twist said leading portion relatively to the remainder of the tube so as to form a contracted portion and thereby close the charged container, and means whereby a fastening device additional to the main body of the said tubular container is applied to said contracted portion without itself actually causing the contraction.

12. Apparatus for manufacturing and charging containers, wherein a web of flexible material is led from a supply roll through a former to bring it to the shape of a tube, the forward end of the tubular container so formed is closed, and the tubular container is charged through its open end, comprising a socket which is free to move longitudinally and is adapted to receive the leading portion of the charged tubular container, means to twist said leading portion relatively to the remainder of the tube so as to form a contracted portion and thereby close the charged container, and means to control the movement aforesaid during the closing operation so as to maintain the required tension on the material of the tubular container.

13. Apparatus for manufacturing and charging containers, wherein a web of flexible material is led from a supply roll through a former to bring it to the shape of a tube, the forward end of the tubular container so formed is closed, and the tubular container is charged through its open end, comprising a

socket which is free to move longitudinally and is adapted to receive the leading portion of the charged tubular container, means to twist said leading portion relatively to the remainder of the tube so as to form a contracted portion and thereby close the charged container, and means to counterbalance the weight of the socket and contents of the container to assist the movement aforesaid during the closing operation.

14. Apparatus for manufacturing and charging containers, wherein a web of flexible material is led from a supply roll through a former to bring it to the shape of a tube, the forward end of the tubular container so formed is closed, and the tubular container is charged through its open end, comprising a socket to receive the tubular container, which socket is provided with means to shape the forward end of the container, means adapted to cause all parts of the wall of the tubular container at the rear of the charge to contract centrally about the axis of the container so as to form a contracted portion, and means whereby a fastening device additional to the main body of the said tubular container is applied to said contracted portion without itself actually causing the contraction.

15. Apparatus for manufacturing and charging containers, wherein a web of flexible material is led from a supply roll through a former to bring it to the shape of a tube, the forward end of the tubular container so formed is closed, and the tubular container is charged through its open end, comprising means adapted to cause all parts of the wall of the tubular container at the rear of the charge to contract centrally about the axis of the container so as to form a contracted portion, a contractible part on said former, means to cause said part to clamp the tube of flexible material between itself and an abutment within said web during the closing of the container, and means whereby a fastening device additional to the main body of the tubular container is applied to said contracted portion without itself actually causing the contraction.

16. Apparatus for manufacturing and charging containers, wherein a web of flexible material is led from a supply roll through a former to bring it to the shape of a tube, the forward end of the tubular container so formed is closed, and the tubular container is charged through its open end, comprising means adapted to cause all parts of the wall of the tubular container at the rear of the charge to contract centrally about the axis of the container so as to form a contracted portion, and fastener-applying mechanism which comprises a wire-feeding device and means co-operating therewith to form a fastener from said wire and affix it around the contracted portion of the tubular container.

17. Apparatus for manufacturing and charging containers, wherein a web of flexible material is led from a supply roll through a former to bring it to the shape of a tube, the forward end of the tubular container so formed is closed, and the tubular container is charged through its open end, comprising means adapted to cause all parts of the wall of the tubular container at the rear of the charge to contract centrally about the axis of the container so as to form a contracted portion, a wire-feeding device for feeding two wires spaced apart, two co-operating die-members pivotally mounted on a common plate which is also pivotally mounted, upper and lower dies within said die-members, scissors-like blades arranged centrally between said dies, and a wire-shearing blade in one of said dies, all arranged to operate as and for the purposes set forth.

18. Apparatus for manufacturing and charging containers, wherein a web of flexible material is led from a supply roll through a former to bring it to the shape of a tube, the forward end of the tubular container so formed is closed, and the tubular container is charged through its open end, comprising means adapted to cause all parts of the wall of the tubular container at the rear of the charge to contract centrally about the axis of the container so as to form a contracted portion, a wire-feeding device for feeding two wires spaced apart, two co-operating die-members pivotally mounted on a common plate which is also pivotally mounted, means on one of said die-members to bend over the ends of said wires, a device to form the bent-over ends into a hook, upper and lower dies within said die-members, scissors-like blades arranged centrally between said dies, and a wire-shearing blade in one of said dies all arranged to operate as and for the purposes set forth.

19. In apparatus for manufacturing and charging containers, wherein a web of flexible material is led from a supply roll through a former to bring it to the shape of a tube, the forward end of the tubular container so formed is closed, and the tubular container is charged through its open end, the combination of means for applying external attachments to the tubular container, which attachments extend longitudinally of the container, and means adapted to cause all parts of the wall of the tubular container at the rear of the charge and said external attachments to contract centrally about the axis of the container so as to form a contracted portion and thereby close the end of the charged container.

20. In apparatus for manufacturing and charging containers, wherein a web of flexible material is led from a supply roll through a former to bring it to the shape of a tube, the forward end of the tubular container so formed is closed, and the tubular container is

charged through its open end, the combination of means for applying external attachments to the tubular container, which attachments extend longitudinally of the container, means adapted to cause all parts of the wall of the tubular container at the rear of the charge and said external attachments to contract centrally about the axis of the container so as to form a contracted portion and thereby close the end of the charged container, and means to affix subsequently a separate fastener to the closed end of the container.

21. Apparatus for manufacturing and charging containers, wherein a web of flexible material is led from a supply roll through a former to bring it to the shape of a tube, the forward end of the tubular container so formed is closed and the tubular container is charged through its open end, comprising a socket adapted to receive a receptacle into which the charged container is delivered for subsequent transport, means adapted to cause all parts of the wall of the tubular container at the rear of the charge to contract centrally about the axis of the container so as to form a contracted portion, and means whereby a fastening device additional to the main body of the said tubular container is applied to said contracted portion without itself actually causing the contraction.

22. Apparatus for continuously manufacturing and charging containers, which comprises in combination a former to bring the material from which the containers are to be made to the shape of a tube, a mandrel through which the charge is fed into the tubular container so formed, means whereby the mandrel is caused to feed the web of material through the former, a socket to receive the charged end of the tubular container, means to cause all parts of the wall of the tubular container at the rear of the charge to contact centrally about the axis of the container so as to form a contracted portion and thereby close the rear end of the charged container and simultaneously the adjacent end of the next container to be charged, mechanism for forming and affixing two wire clips at the situation where the walls of the tubular container have been closed together, and means for severing the contracted portion between the two clips so as to separate the charged container from the next following container.

23. Apparatus for continuously manufacturing and charging containers which comprises in combination a former to bring the material from which the containers are to be made to the shape of a tube, a mandrel through which the charge is fed into the tubular container so formed, means for feeding a plurality of wires through the former with the material from which the container is made, means whereby the mandrel is caused to feed the web of material and said wires through the former, a socket to receive the charged end of the tubular container, and mechanism for twisting the charged portion of the tubular container so as to close simultaneously the rear end of the charged container and the adjacent end of the succeeding container and to combine the said wires with the twisted portion of the material from which the containers are made, for the purpose set forth.

24. In apparatus for manufacturing and charging containers wherein a web of flexible material is led from a supply roll between a former and a mandrel to bring it to the shape of a tube, the forward end of the tubular container so formed is closed, and the tubular container is charged through its open end, the combination of a mandrel provided with a conduit through which the charge is fed into the tubular container, and with a separate passage constituting an outlet for air from the container.

25. Apparatus for manufacturing and charging containers wherein a web of flexible material is formed into a tube, the forward end of the tubular container so formed is closed, and the tubular container is charged through its open end, comprising the combination of a former, a device that is disposed within said former and around which the tubular container aforesaid is formed, means for feeding supports to said device, and means whereby said supports are taken by said device and inserted within the tubular container.

26. Apparatus for manufacturing and charging containers, wherein a web of flexible material is led from a supply roll through a former to bring it to the shape of a tube, the forward end of the tubular container so fromed is closed, and the tubular container is charged through its open end, comprising fastener-applying mechanism including a wire-feeding device and means co-operating therewith to form a fastener from said wire and affix it around the contracted portion of the tubular container.

In testimony whereof I affix my signature.

HAROLD EDWIN SPENCER.