No. 754,391. PATENTED MAR. 8, 1904.

F. C. ROBINSON & J. E. GREEN.

BURGLAR ALARM.

APPLICATION FILED NOV. 26, 1901.

NO MODEL.

Fig. 1.

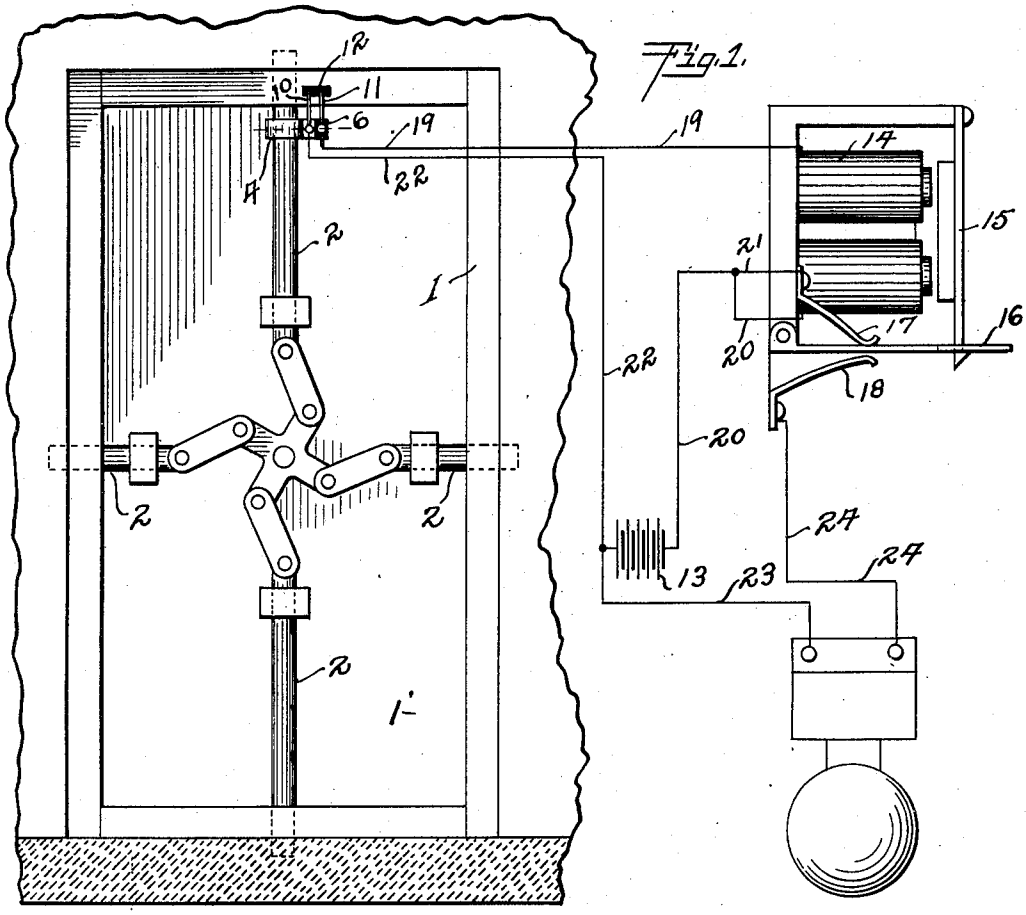

Fig. 2.

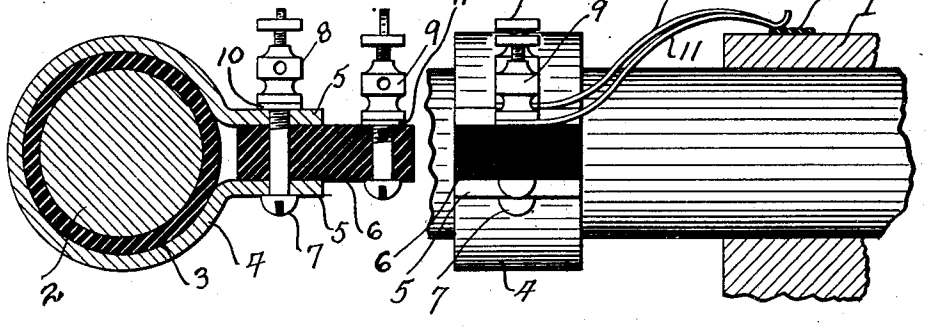

Fig. 3.

WITNESSES:

H. J. Corgill.

E. W. Barnell.

INVENTORS

FREEMAN C. ROBINSON

JAMES E. GREEN

BY

Paul & Paul

ATTORNEYS.

No. 754,391. Patented March 8, 1904.

UNITED STATES PATENT OFFICE.

FREEMAN C. ROBINSON AND JAMES E. GREEN, OF COUNCIL BLUFFS, IOWA.

BURGLAR-ALARM.

SPECIFICATION forming part of Letters Patent No. 754,391, dated March 8, 1904.

Application filed November 26, 1901. Serial No. 83,713. (No model.)

To all whom it may concern:

Be it known that we, FREEMAN C. ROBINSON and JAMES E. GREEN, of Council Bluffs, in the county of Pottawattamie, State of Iowa, have invented certain Improvements in Burglar-Alarms, of which the following is a specification.

This invention relates to devices adapted to be placed upon doors of safes, bank-vaults, or other receptacles designed for storing valuables, so as to be electrically operated upon any movement being given to the draw-bolts of the door.

The object of this invention is to provide a simple and efficient means for protecting vault-safes or other receptacles, whereby any attempt to open the door of the same by turning the knob or handle operating the draw-bolts thereof will close an electric circuit through an automatic contact-drop or circuit-closer, the momentary operation of said circuit-closer closing permanently a second electric circuit leading therefrom to any suitable electric alarm or signal.

Our invention consists generally in a novel circuit-closing attachment adapted to be placed on one or more of the draw-bolts of any safe or vault door or upon any other door and adapted to close an electric circuit upon the movement of the draw-bolt preparatory to opening the door.

The invention consists, further, in the constructions and combinations hereinafter described, and particularly pointed out in the claims.

In the accompanying drawings, Figure 1 is an elevation of the inside of a bank-vault or safe-door having our circuit-closing attachment thereon and in connection therewith a diagram illustrating the electric circuits connected therewith, with an elevation of the automatic circuit-closer and an outline of the alarm-gong. Fig. 2 is a sectional view of the draw-bolt and circuit-closing attachment connected therewith. Fig. 3 is a side elevation of the device shown in Fig. 2.

In the drawings, 1 represents the frame or casing of the vault or safe door, and 1′ represents the door, having the usual draw-bolts 2 thereon. These bolts are arranged to be operated by the usual turn-spindle and links or by any suitable means. Secured upon one of said bolts near its outer end is a ring of insulating material 3, around which is placed an open metallic collar 4, having outwardly-extending ends 5. An insulating-block 6 is arranged between the ends 5 of the collar and extends beyond said ends. A screw 7 passes through the ends 5, through the insulating-block 6, and forms a support for an ordinary binding-post 8. A second binding-post 9 is secured upon the insulating-block 6. Secured beneath the binding-posts 8 and 9, respectively, are the contact-springs 10 and 11, the free ends of which rest normally when the bolts are thrown to lock the door on a small insulating-plate 12, placed on the frame of the vault-door.

At any suitable point, preferably within the vault, is placed a suitable battery 13 and a contact-drop or automatic circuit-closer 14. The armature 15 of this circuit-closer is provided with a hook or catch and supports the free end of the pivoted arm 16, which is pressed downward by the small spring 17. Beneath the arm 16 is the contact-spring 18, which is not in contact with the arm 16 when said arm is supported by the armature 15; but when said arm is released by the armature it will be pressed downward by the spring 17, so as to make an electrical contact with the spring 18. The spring 17 remaining in contact with the arm 16 and said arm being in contact with the spring 18, a circuit will be closed through the spring 18, the arm 16, and the spring 17. A suitable conductor 19 extends from the binding-post 9 on the draw-bolt of the vault-door to the automatic circuit-closer 14 and is connected to the magnet thereof. A second conductor 20 extends from the magnet to the battery 13. Extending from the conductor 20 is the conductor 21, that is connected to the spring 17. A conductor 22 also extends from the binding-post 8 on the draw-bolt of the vault-door to the other pole of the battery 13. From the battery and spring 18 extend, respectively, conductors 23 and 24 to an alarm or signal device 24′, which may be of any suitable construction.

The operation of the apparatus will be readily understood from the foregoing detailed description of its construction. If any attempt is made to open the door and the draw-bolt is moved even a very slight amount, the springs 10 and 11 will move off from the insulating-block 12 and will come in contact with the metallic door-frame and an electric circuit will be closed through said springs, the door-frame, the battery, the conductors, and the magnet of the automatic circuit-closers or contact-drop. This will release the arm 16 and permit it to drop down on contact-spring 18, the contact-spring 17 following said arm and remaining in contact therewith. By this means a circuit will be closed through the alarm-gong, and said gong will be sounded until the battery is exhausted or until the vault is entered and the pivoted arm 16 is raised and secured by the hook upon the armature 15. As a very slight movement of the draw-bolt will cause the springs to come in contact with the metallic door-frame, it will be obvious that if any attempt is made to move the draw-bolts the circuit will be closed and the alarm will be sounded.

Various modifications of the apparatus will be apparent to any one skilled in the art, and hence we do not confine ourselves to the details of the construction herein shown and described.

We do not in this application make claim to the general burglar-alarm system with which this device may be used, as we have shown and described the same in a separate application of even date herewith.

We claim as our invention—

1. The combination, with a suitable door provided with a draw-bolt, of an insulating-plate in the door-casing, a circuit-closer comprising springs arranged upon said draw-bolt and both insulated therefrom and adapted to bear upon an insulating-plate in the door-casing and to be disengaged therefrom to close an electric circuit upon the movement of said bolt, an automatic circuit-closer and an alarm-gong in a circuit arranged to be closed by said automatic circuit-closer, substantially as described.

2. The combination, with a vault or vault-door provided with a draw-bolt 2, of an insulated collar arranged upon said draw-bolt, the contact-springs 10 and 11 supported upon said draw-bolt and adapted to rest normally upon an insulating-block arranged upon the door-frame, an automatic circuit-closer in circuit with said contact-springs, an alarm-gong and an electric circuit connected therewith and adapted to be closed by said automatic circuit-closer.

In witness whereof we have hereunto set our hands this 9th day of November, 1901.

FREEMAN C. ROBINSON.
JAMES E. GREEN.

In presence of—
I. V. FLICKINGER,
PAINTER KNOX.