July 31, 1956 W. D. HIBBARD 2,756,610

CENTERING DEVICE

Filed June 5, 1951

FIG 1

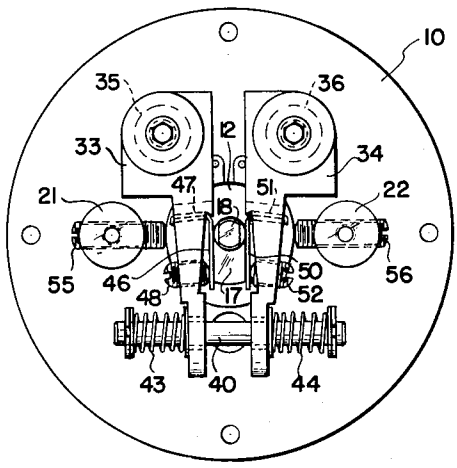

FIG. 2

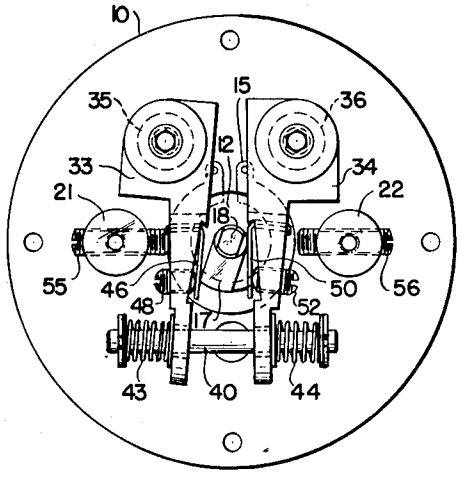

FIG 3

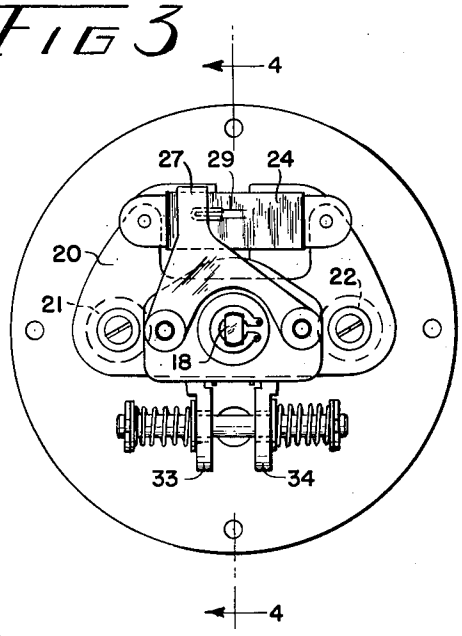

FIG. 4

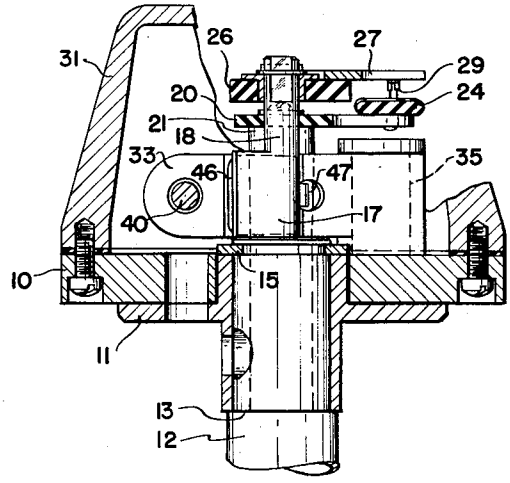

INVENTOR.
WILLIAM D. HIBBARD

BY

George H. Fisher

ATTORNEY

United States Patent Office 2,756,610 Patented July 31, 1956

2,756,610

CENTERING DEVICE

William D. Hibbard, Minneapolis, Minn., assignor to Minneapolis-Honeywell Regulator Company, Minneapolis, Minn., a corporation of Delaware

Application June 5, 1951, Serial No. 230,056

5 Claims. (Cl. 74—470)

This invention relates to a mechanism adapted to return two relatively pivoted parts to a predetermined angular relationship when a force that has moved them out of this relationship is removed.

An object of the invention is to provide a mechanical linkage that will return an angularly displaced member to a predetermined position when released from positions on either side of a predetermined position.

Another object is to provide a centering device having adjusting means serving the purpose of determining accurately the centered position and of eliminating lost motion at the centered position.

Another object is to provide a mechanical linkage for centering a manually operated potentiometer.

Other objects will be evident from the following specification and claims, and from the drawing in which

Figure 1 shows the centering mechanism in centered position, and with the potentiometer and cover removed,

Figure 2 shows the same mechanism displaced from the centered position,

Figure 3 shows the device with the potentiometer mounted over the centering mechanism, and

Figure 4 is an elevation taken in section along the line 4—4 of Figure 3.

The illustrated embodiment of the invention shows a manually operable potentiometer designed for use in connection with an airplane pilot's control stick which is used to modify the course of an airplane as dictated by an autopilot. This potentiometer is carried within a knob at the top of the stick and is operated by turning the knob while the supporting stick remains relatively stationary. The stick is also movable forward and aft to control the airplane about its pitch axis, and laterally to control it about its roll axis, but that mechanism forms no part of the present invention. Reference is made, however, to Kwasniewski application, Serial Number 230,054 filed June 5, 1951, now Patent No. 2,625,050, issued January 13, 1953, directed to another centering device useful for that purpose. The present device is adapted to control turning of the airplane.

A supporting plate **10** is secured to a flanged bushing **11**, as seen in Figure 4. The bushing **11** is secured to the top end of a tubular member **12** and is rotatably mounted with respect thereto. The lower end of the bushing engages a shoulder **13** on the tubular member **12** and the upper end of the bushing is confined by a snap ring **15** carried in a groove in the tubular member **12**.

The tubular member **12** has an extension projecting upwardly from supporting plate **10** comprising a cam **17**, and above that a rod **18**, the rod being coaxial with the pivotal axis of the tubular member **12** in the bushing **11**. The upper surface of the cam **17**, as seen in Figures 1 and 2, is also coaxial with the axis of the tubular member **12**, and is herein shown as being of the same radius as the rod **18**. An insulating plate **20** is supported in spaced relation to the plate **10** by a pair of

posts **21** and **22**. As seen in Figures 3 and 4, the plate **20** carries an electrical resistance winding **24** in fixed relation with respect to the plate **10**. An insulating plate **26** is secured to the top end of the shaft **18** for rotation therewith. An electrical contact arm **27** is secured to the plate **26** and carries an electrical contact **29** adapted to engage the resistance winding **24**. The resistance winding **24** together with the contact arm **27** and contact **29** comprise a potentiometer adapted to be positioned by relative movement between the supporting plate **10** and the member **12**. A cover **31**, suitably secured to the plate **10**, encloses the mechanism above the plate **10** and is made in the shape of a knob to facilitate manual positioning of the potentiometer.

As seen in Figures 1 and 2, a pair of levers **33** and **34** are pivotally mounted on the plate **10** on a pair of pins **35** and **36** which have their axes parallel to the pivotal axis of the member **12** in the supporting plate **10**. The levers **33** and **34** are so pivoted as to be movable toward and away from the pivotal axis of the member **12**. A rod **40** extends through openings in the lower ends of both levers, as seen in Figures 1 and 2, and carries a snap ring at each end which serve as abutments for a pair of compression springs **43** and **44**, the opposite ends of which engage the outer surfaces of the levers **33** and **34**. The springs **43** and **44** bias the levers **33** and **34** toward the pivotal axis of the member **12** in the plate **10**.

A flat plate **46** made of resilient sheet metal is carried on the inner surface of the lever **33** and is provided with a projection **47** of reduced size that extends through a hole in the lever to hold it in place. The upper edge of the plate **46** as seen in Figures 1 and 2 engages a notch in the lever **33**, the notch serving as a pivotal support for the portion of the plate **46** that extends generally parallel to the length of the lever. The reduced extension **47** of the plate **46** is shaped to bias the plate **46** toward the lever. An adjusting screw **48** is screw threaded in the lever **33** and abuts the underside of the plate **46** to adjust the angular relationship between the plate **46** and the lever **33**. A similar plate **50** is carried by the lever **34** and has a reduced extension **51** extending through the lever and an adjusting screw **52** for determining its angular relation with respect to the lever **34**. It will be seen that both the plates **46** and **50** present plain surfaces for engagement with the cam **17**. The cam **17**, likewise, presents a pair of plain surfaces for engagement with the plates **46** and **50**. The plain surfaces of the cam **17** joins smoothly into the cylindrical surface thereof and in the "center" position as seen in Figure 1, the opposing plates **46** and **50** engage elements of the cylindrical surface end of the opposing plain surfaces as well.

In Figure 2 the supporting plate **10** has been rotated counterclockwise with respect to the member **12** so that the cam **17** now engages the plate **46** only at an extremity of its left-hand plain surface, while the plate **50** engages the cam only on an element of the cylindrical surface thereof. The lever **33** has been rotated in a clockwise direction with respect to the plate **10** and energy has been stored in the springs **43** and **44** which is available to restore the mechanism to its center position upon release of the knob **31**. Turning the knob in the opposite direction will, of course, result in displacement of the lever **34**. In order to limit the possible angular displacement of the potentiometer, the post **21** is provided with an adjustable stop screw **55** adapted to engage the outer surface of the lever **33** and the post **22** carries an adjustable stop screw **56** adapted to engage the outer surface of the lever **34**.

Since the system with which the potentiometer is to be associated may require that the "centered" position of the potentiometer slider does not exactly correspond to its physical center, and since manufacturing tolerances

of the parts must be provided for, it is necessary to provide adjustment both for the location of the centered position and to assure a definite centered position. In order to provide a definite centered position, it is necessary to adjust the screws 48 and 52 so that the plates 46 and 50 engage the cam 17 at spaced points along the cam extending laterally from the axis thereof. If the plates 46 and 50 are too close together at either the top or the bottom as seen in Figures 1 and 2 a certain amount of relative movement between the supporting plate 10 and the member 12 would be permitted without changing the length of the springs 43 and 44. In order to adjust the "centered" position of the potentiometer the adjusting screws 48 and 52 are relatively adjusted to provide the desired angular relation between the supporting plate 10 and member 12.

In order to provide smooth operation and long life, cam 17, and plates 46 and 50 are provided with extended surfaces. Certain phases of the invention, however, contemplate the plates 46 and 50 merely as arms pivotally adjustable with respect to the levers 33 and 34. Obviously, the invention will have many uses other than in the airplane control stick described.

I claim as my invention:

1. Centering means for an oscillatable member comprising, a support, a member pivoted in said support, first and second levers pivotally mounted on said support for movement toward and away from the pivotal axis of said member, a first arm pivoted on said first lever on an axis parallel to the pivotal axis of said first lever, a second arm pivoted on said second lever on an axis parallel to the pivotal axis of said second lever, spring means biasing both levers toward the pivotal axis of said member, said member having a portion lying between said arms and shaped to engage each of said arms at two points spaced different distances from the pivotal axis of the associated lever, and means for varying the angular relation between each arm and associated lever.

2. Centering means for an oscillatable member comprising, a support, a member pivoted in said support, first and second levers pivotally mounted on said support for movement toward and away from the pivotal axis of said member, a first arm pivoted on said first lever on an axis parallel to the pivotal axis of said first lever, a second arm pivoted on said second lever on an axis parallel to the pivotal axis of said second lever, spring means biasing both levers toward the pivotal axis of said member, said member having an arcuate surface that is coaxial with the pivotal axis thereof and adapted to engage both of said arms, and said member further having a pair of oppositely disposed surfaces adapted to engage portions of said arms spaced with respect to the pivotal axes of said levers from the portions thereof engaged by said arcuate surface, and means for varying the angular relation between each arm and associated lever.

3. Centering means for an oscillatable member comprising, a support, a member pivoted in said support, first and second levers pivotally mounted on said support for movement toward and away from the pivotal axis of said member, a first arm pivoted on said first lever on an axis parallel to the pivotal axis of said first lever, a second arm pivoted on said second lever on an axis parallel to the pivotal axis of said second lever, spring means biasing both levers toward the pivotal axis of said member, said member having a portion lying between said arms, said portion having opposing flat surfaces adapted to engage flat surfaces on said arms, and means for varying the angular relation between each arm and associated lever.

4. Centering means for an oscillatable member comprising, a support, a member pivoted in said support, first and second levers pivotally mounted on said support for movement toward and away from the pivotal axis of said member, a first arm pivoted on said first lever on an axis parallel to the pivotal axis of said first lever, a second arm pivoted on said second lever on an axis parallel to the pivotal axis of said second lever, spring means biasing both levers toward the pivotal axis of said member, resilient means biasing each arm in one angular direction with respect to its associated lever, said member having a portion lying between said arms and shaped to engage each of said arms at two points spaced different distances from the pivotal axis of the associated lever, and an adjusting screw acting between each arm and lever to limit relative angular movement due to the force of said resilient means.

5. Centering means for a control device comprising, a support, a member pivoted in said support, control means actuated by relative movement between said support and said member, said control means having a null intermediate position, first and second levers pivotally mounted on said support for movement toward and away from the pivotal axis of said member, a first arm pivoted on said first lever on an axis parallel to the pivotal axis of said first lever, a second arm pivoted on said second lever on an axis parallel to the pivotal axis of said second lever, spring means biasing both levers toward the pivotal axis of said member, said member having a portion lying between said arms and shaped to engage each of said arms at two points spaced different distances from the pivotal axis of the associated lever and means for varying the angular relation between each arm and associated lever so that said member engages each of said arms at said two spaced points when said control means is in its null position.

References Cited in the file of this patent

UNITED STATES PATENTS

713,490	Pottin	Nov. 11, 1902
1,768,625	Olsen	July 1, 1930
2,066,287	Chandler	Dec. 29, 1936
2,220,180	Spitzglass et al.	Nov. 5, 1940
2,427,621	Peterson	Sept. 16, 1947
2,531,764	Binus et al.	Nov. 28, 1950

FOREIGN PATENTS

687,518	Germany	Jan. 31, 1940