G. W. HART.

SWITCH.

APPLICATION FILED NOV. 2, 1907.

917,760.

Patented Apr. 13, 1909.

2 SHEETS—SHEET 1.

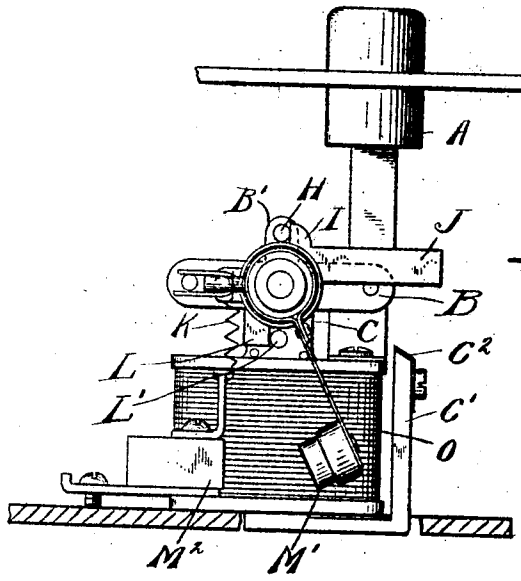

Fig. 1.

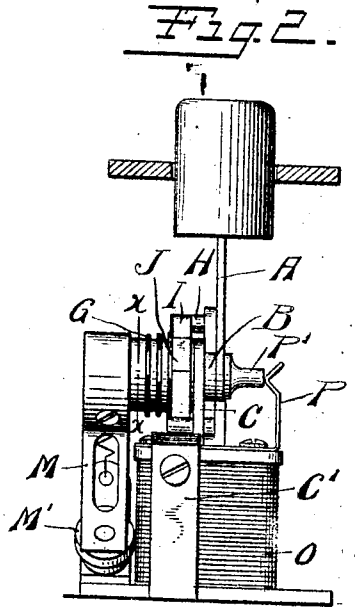

Fig. 2.

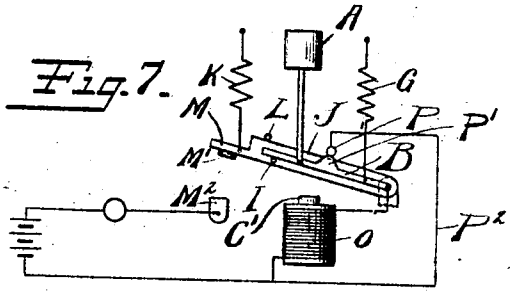

Fig. 7.

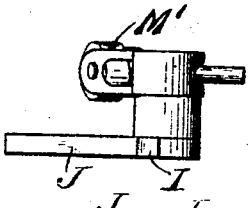

Fig. 4.

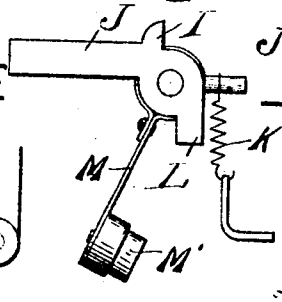

Fig. 5.

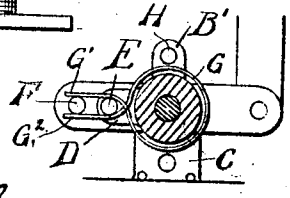

Fig. 6.

Witnesses:
Chas. A. Reed
Clara L. Rouch

Inventor:
Gerald W. Hart
By his Attorneys
Bartlett, Brownell & Mitchell

G. W. HART.

SWITCH.

APPLICATION FILED NOV. 2, 1907.

917,760.

Patented Apr. 13, 1909.

2 SHEETS—SHEET 2.

Fig. 3.

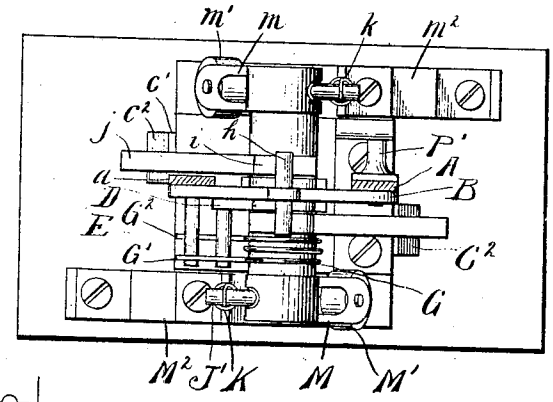

Fig. 8.

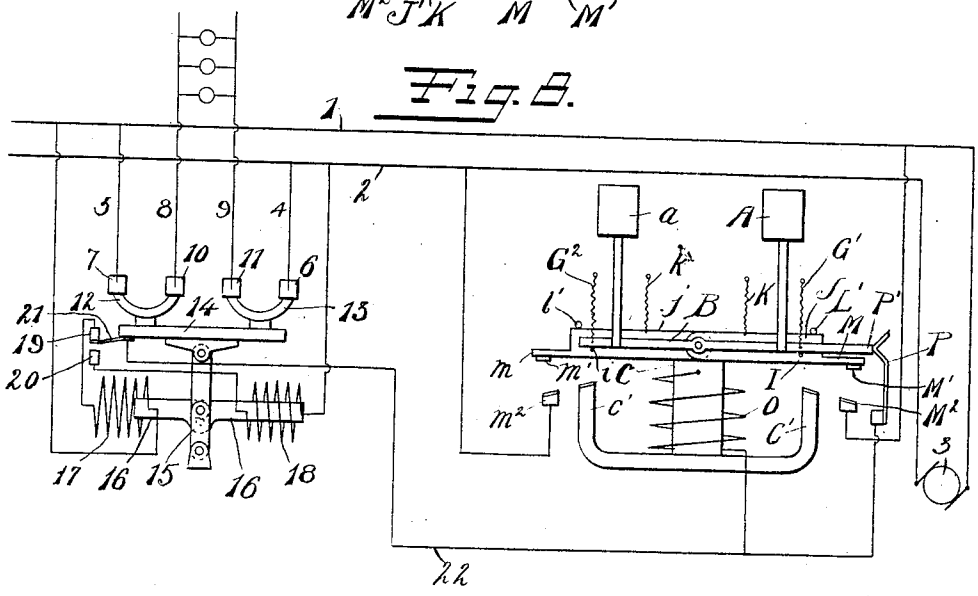

Witnesses:

Chas. A. Peard

Clara L. Roesch

Inventor

GERALD W. HART.

By his Attorneys

Bartlett, Brownell & Mitchell

BEST AVAILABLE COPY

UNITED STATES PATENT OFFICE.

GERALD W. HART, OF HARTFORD, CONNECTICUT, ASSIGNOR TO THE HART MANUFACTURING COMPANY, OF HARTFORD, CONNECTICUT, A CORPORATION OF NEW JERSEY.

SWITCH.

No. 917,760. Specification of Letters Patent. Patented April 13, 1909.

Application filed November 2, 1907. Serial No. 400,318.

To all whom it may concern:

Be it known that I, GERALD W. HART, a citizen of the United States, residing at Hartford, Hartford county, State of Connecticut, have invented certain new and useful Improvements in Switches, of which the following is a full, clear, and exact description.

My invention relates to improvements in switches and has for its object to produce a switch mechanism in which, after the circuit is once completed, it will be maintained magnetically until the actuating device returns to its normal position and then be released, so as to break the circuit with a quick action.

My invention further has for its object to produce the combination of an electrically actuated main circuit switch and a pilot switch controlling two independent circuits for actuating the main circuit switch provided with means for automatically interrupting either of said circuits, when energized, at two separate points by independent means.

My invention also has for its object to provide a pilot switch and a main switch, such that the main switch controls electrically the detent of the pilot switch.

The following is a description of apparatus embodying my invention, reference being had to the accompanying drawings, in which—

Figure 1 is a side elevation of the forward portion of a two-circuit switch embodying my invention, certain parts being omitted; Fig. 2 is an end elevation of the same; Fig. 3 is a plan view of the complete switch; Figs. 4 and 5 are, respectively, a plan view and a side elevation of a detail; Fig. 6 is a sectional detail on line x—x of Fig. 2; Fig. 7 is an arrangement of circuits of the structure used to control a single circuit; and Fig. 8 is a diagram showing the combination of the two-circuit controlling switch, used as a pilot switch, with an electrically actuated main circuit switch.

Referring more particularly to the drawings, A is a push-button pivoted to an actuating member, consisting of a rocking lever B, which in turn is movably mounted upon a standard C. The standard C has a lateral projection D which carries a pin E and the rocking lever B carries a pin F, which is embraced by the ends G′—G² of a spring G, the result being that the spring G tends to return the rocking lever B to a horizontal position whenever it is moved therefrom. The rocking lever B has an upward projection B′ carrying a pin H, which engages with a projection I, preferably formed integral with a magnetic armature J. This magnetic armature is rigidly connected to a hub which carries a pin J′ to which the spring K is attached, normally tending to restore the armature J to its initial position whenever it is moved downwardly out of that position. The return movement of the armature J is limited by the engagement of the projection L, rigidly connected thereto, with the pin L′ carried by the standard C. The hub which is connected to the armature J carries an arm M which, at its lower extremity is provided with a contact-making surface M′, which contact-making surface, when the hub is rotated, is brought into engagement with the contact terminal M², to which is connected one end of the circuit to be directly controlled by the switch. The standard C is preferably made of magnetic material and forms a core for a coil O. This core has an extension C′, which comes up outside of the coil and into the path of the armature J. The winding of the coil is connected at one end to the frame of the switch and at the other end to the other terminal of the circuit. The end which is connected to the frame of the switch is also electrically connected to the contact-making device P, which is insulated from the other metallic parts of the switch, and with which the surface P′, which is carried by the rocking lever B and is not insulated from the other parts of the switch, makes contact. The electrical connection between the contact P and the terminals of the circuit is shown in Fig. 7 at P², and when the contact P′ is in engagement with the contact P, establishes a shunt around the coil O. The projection C′ of the core C is provided with a non-magnetic facing C² to prevent the adhering of the armature J to the projection C′, when the current has ceased to flow through the coil O.

The operation of so much of the switch as has now been described, is as follows: When the push-button A is depressed, the

rocking lever B turns and the pin H, engaging with the projection I, compels the armature J, together with the contact M′, to move about its axis until engagement is made between the contact surfaces M′ and M^2, and the armature J is in proximity to the projection C′. As soon as the engagement between the contact surfaces M′ and M^2 takes place, a current flows through the coil O, energizing the core C—C′ which, together with the coil O, constitute a magnetic detent for the movable switch member of which the contact M′ forms a part. The contact surfaces M′—M^2 will be thus forced together and held in engagement as soon as the coil O is energized. Upon the release of the push-button, however, it, together with the rocking lever B, is retracted into its initial position by the spring G. As they return to their initial positions, the projection P′ carried by the lever B makes engagement with the contact P and thus completes the short-circuit around the coil O and its core, thereby releasing the armature J and permitting the switch member, carrying the contact M′, to fly back with a quick sharp movement under the influence of the spring K, producing a sudden breaking of the circuit.

The circuit connections for the parts above described, together with the diagrammatic representation of the switch, are shown in Fig. 7 and will be readily understood, the letters used in Fig. 7 referring to parts corresponding to those to which similar letters are applied in the other figures of this sheet.

The parts above constitute in and of themselves, a complete switch embodying my invention for use in controlling a single circuit.

In the plan view, I have shown in Fig. 3 a second push-button connection *a* at the left-hand end of the rocking lever B. A rearwardly extending pin *h* is in line with the pin H and engages a projection *i* connected to a magnetic armature *j*, which is connected through a hub to a contact bearing arm *m*, carrying a contact *m′* which engages with a contact m^2, the movable part being identically the same as shown in detail in Figs. 4 and 5, and heretofore described in connection with the apparatus of Figs. 1 and 2. The core C carries a rearwardly projecting pin corresponding to L′, with which the downward projection corresponding to L engages. The core C is provided with a second lateral projection *c′*, having a non-magnetic covering c^2 to prevent the adhering of the armature *j* to the core.

The action of the parts on the rear of the switch is precisely the same as that on the front of the switch, except that when the left-hand end of the rocking lever B is depressed by the action of its push-button, the right-hand end of the lever carrying the contact P′ is moved upward instead of downward and a contact is made between P and P′ on the downward movement of the latter, instead of on the upward movement of the latter.

When this switch is used for controlling two circuits, the terminals M^2—m^2 are connected in the two independent circuits. A common return is connected to the free terminal of the coil O. Whenever either push-button is depressed one of these circuits is completed at the switch, and that circuit is held complete until the actuating means, consisting of the rocking lever B, returns to normal position, at which time contact is made between the terminals P and contact surface P′, and the coil O short-circuited.

In Fig. 8 the foregoing switch is shown combined as a pilot switch with a magnetically actuated switch which automatically breaks its actuating circuit, the same reference letters being applied to parts corresponding to those shown in the preceding figures. In this combination very important results are attained, inasmuch as the actuating circuit is always automatically broken at the pilot switch and also at the main switch.

The magnetically operated switch here shown, is shown and described in detail in the patent to Hewlett, No. 603,786, dated May 10, 1898. In this combination not only is the advantage present of having the actuating circuit automatically broken both at the main switch and at the pilot switch, but inasmuch as that circuit is broken at the main switch it insures the opening of the pilot switch, even though sufficient contact is not made between the contacts P and P′, to short-circuit the coil O, or if those contacts P and P′ are removed. This is brought about by the fact that as soon as the main switch is thrown so that the work which was intended to be done by the closing of the pilot switch is accomplished, the circuit, through the coil O, is interrupted by the main switch itself and the coil O is thereby deënergized so that the magnetic detent releases the armature of the pilot switch.

Referring briefly in detail to Fig. 8, 1—2 are main conductors leading from the source 3. 4—5 are branch conductors connected to switch terminals 6—7. 8—9 are conductors leading to the work-circuit connected to switch terminals 10—11. 12—13 are switch arms carried by the plate 14, controlled by toggle-joint 15, which is actuated by the solenoid cores 16—16. 17—18 are the solenoid windings, the first of which has one terminal connected to the main 1, while the second has a terminal connected to the main 2. Their other terminals are connected to contacts 19—20. A contact device 21 is

BEST AVAILABLE COPY

carried by the plate 14, which, as the plate is moved to and fro by the toggle so as to move the arms 12—13, makes and breaks engagement with the contacts 19—20. This contact-making device 21 is connected to a circuit 22, which in turn is connected to one terminal of the coil O. In the pilot switch, the terminal M^2 is connected to the conductor 1, and the terminal m^2 is connected to the conductor 2, whereby when the left-hand push-button is depressed, a circuit is made through the coil 17, when the main switch is closed; and when the right-hand push-button is depressed, the circuit is made through the coil 18.

The operation is as follows: When the main switch is closed, as shown, its coil 17 which has one terminal connected directly to the main 1, has its other end connected to the terminal m', through the following path, viz: terminals 19—21, conductor 22, coil O and switch arm m. When the push-button a is depressed, the terminal m' is brought into engagement with the terminal m^2, and thus electrically connected to the main 2. This energizes the coil 17 and draws the solenoid core to the left, resulting in the withdrawal of the switch arms 12 and 13 from the contacts 7—10 and 11—6. The movement of the plate 14 breaks the engagement between the contacts 19 and 21, and brings the contact 21 into engagement with the contact 20, thus connecting one terminal of the coil 18 with the coil O of the pilot switch, the other terminal of the coil 18 being connected with the main 2. When the rocking lever B, which was moved upon the downward movement of the push-button a, returns to its normal position, the arm j is retained in depressed position by the magnetic detent, of which the coil O and the core c' form parts. Upon the return of the rocking lever B to its normal position, the contact P′ makes engagement with the spring contact P, short-circuiting the coil O and thereby releasing the magnetic detent and permitting the arm j to return to its normal position, and the contact m' to leave the contact m^2. The coil O, in addition to being short-circuited, as just described, has its circuit interrupted by the separation of the terminals 19 and 21 at the main switch, so that if a short-circuit around the coil O is not formed, for any reason, the magnetic detent will be released by reason of the breaking of its circuit at the terminals 19 and 21.

When the switch is open and the push-button A depressed, a similar operation takes place, the difference being that in this case the switch arms 12 and 13 are brought into engagement with their respective terminals and the contact 21 is removed from the contact 20 and brought into engagement with the contact 19. In both cases the circuit, which was used to actuate the main switch, is broken at two points, and in both cases the coil O is deënergized by reason of a shunt circuit completed on the return movement of the rocking lever B and also has one terminal disconnected from the source by the movement of the contact 21 of the main switch. The double break in an energized circuit and the two means of deënergizing the coil O greatly reduce the liability of any such derangement as would permit the flow, during an abnormal period, of a current through either of the actuating circuits, since in order that such a circuit should be maintained, both the main switch and the pilot switch have to be out of working condition at the same time.

Various means can be employed to cause the switch to cease to be restrained by the magnetic detent. I prefer to make this magnetic detent an electro-magnetic detent and to short-circuit it when the switch arm is to be released, but my invention, broadly considered is not limited to either of these preferred details.

What I claim is—

1. The combination of a circuit, a switch for opening and closing the same normally tending to return to open position, an independently movable actuating member therefor, an electromagnetically controlled detent having an energized coil located in said circuit and adapted when energized to restrain said switch and hold it closed, and means mechanically connected to said actuating member for short-circuiting said coil and thereby deënergizing it, and releasing said switch.

2. The combination of a switch normally tending to return to open position, a circuit controlled thereby, an electromagnetically controlled detent having an energizing coil located in said circuit and adapted when energized to restrain said switch and hold it closed, an actuating member having a movement independent of the movable member of said switch and tending to return to its initial position, a shunt around said coil completed by said actuating member on its return movement, so as to short-circuit said coil and release said movable switch member so as to permit the switch to open.

3. The combination of a switch normally tending to return to open position, an electromagnetically controlled detent having an energizing coil located in the circuit controlled by said switch and adapted when energized to restrain said switch and hold it closed, an actuating member having a movement independent of the movable member of said switch and tending to return to its initial position, a local shunt around said coil adapted to be completed by the return movement of said actuating member so as to short-

circuit said coil and release said movable switch member so as to permit the switch to open.

4. The combination of a stationary contact, a movable contact, a spring normally tending to separate said contacts, an electromagnetic detent having an energizing coil in series with said contacts and, when energized, holding said contacts in engagement, an actuating member having a movement independent of said movable contact, a spring normally tending to return said actuating member to its initial position, and a shunt around said coil which is closed by said actuating member on its return movement.

5. In combination, two contacts located respectively in independent circuits, means for engaging said contacts and thereby completing said circuits, mechanism for actuating said means so as to complete said circuits. at different times only, detaining means temporarily restraining said circuit-completing means, when in circuit-completing position, said detaining means being controlled by said actuating mechanism so as to release said circuit-completing means when the actuating mechanism returns to normal position.

6. The combination of a plurality of circuit making-and-breaking devices for a plurality of circuits, each tending to return to normal open position, an electromagnetically controlled detent having an energizing coil in series with the several circuits controlled by said circuit making-and-breaking devices and acting, when energized, to maintain the circuit completed by any one of said circuit making-and-breaking devices, an actuating device having a movement independent of said making-and-breaking devices, and normally tending to return to its initial position, and a shunt around said coil which is completed by said actuating device upon its return movement.

7. The combination of two stationary contacts connected respectively to independent circuits, two independently movable contacts adapted to engage respectively one of said stationary contacts, means tending to normally return said movable contacts to open position, an electro-magnetic detent having an energizing coil in series with both of said movable contacts and the circuits controlled thereby, and energized whenever one of said movable contacts is brought into engagement with its corresponding stationary contact and when so energized to maintain such engagement, an actuating device for both of said movable contacts, having an independent movement relatively thereto and normally tending to return to its initial position, and a short-circuit around said coil which is completed on the return movement of said actuating device to its initial position.

8. The combination of a main circuit switch, two actuating circuits therefor, means for causing said main switch to automatically open either one of said circuits whenever actuated thereby and to close the other, a pilot switch having actuating means and adapted, when actuated, to electrically connect, at different times only, contacts located respectively in said two circuits, and means for causing said pilot switch to automatically disconnect, with a quick movement, the contacts in either circuit after electric circuit has been completed at them and independently of the rate of movement of said actuating means.

9. The combination of a main switch, two actuating circuits therefor, means for causing said main switch to automatically open either one of said circuits when actuated thereby and to close the other, a pilot switch having actuating means and adapted, when actuated, to electrically connect, at different times only, contacts located respectively in said two circuits, detaining means temporarily maintaining said electrical circuit when made at said contacts, and means for causing said detaining means to release said switch, said releasing means being controlled by said actuating means.

10. The combination of a main switch, two actuating circuits therefor, means for causing said main switch to automatically open either one of said circuits when actuated thereby and to close the other, a pilot switch having actuating means and adapted, when actuated, to electrically connect, at different times only, contacts located respectively in said two circuits, an electromagnetic detent for temporarily maintaining said electrical circuit when made at said contacts, said detent having an energizing coil and a shunt circuit about said coil, said shunt circuit being made and broken by said actuating means.

11. The combination of main circuit conductors, a main switch controlling the circuit through the same, two actuating circuits therefor adapted to be connected to said main circuit conductors, means for causing said main switch to automatically open either one of said circuits when actuated thereby and to close the other, a pilot switch having actuating means and adapted, when actuated, to electrically connect, at different times only, contacts located respectively in said two circuits, an electromagnetic detent for temporarily maintaining said electrical circuit when made at said contacts and in series therewith, said detent being released by the opening of the energized actuating circuit at the main switch, said detent having an energizing coil in series with said means for causing said main switch to open said actuating circuits.

12. In a switch, the combination of a circuit, a switch member for opening and closing the same, an actuating member for said switch member, a spring tending to return the same to normal position, a magnetic detent restraining said switch member, and means actuated through said actuating member and spring for releasing said switch member from said magnetic detent.

GERALD W. HART.

Witnesses:
N. B. BROWNELL,
LANGDON MOORE.

Correction in Letters Patent No. 917,760.

It is hereby certified that in Letters Patent No. 917,760, granted April 13, 1909, upon the application of Gerald W. Hart, of Hartford, Connecticut, for an improvement in "Switches," an error appears in the printed specification requiring correction, as follows: In line 96, page 3, the word "energized" should read *energizing;* and that the said Letters Patent should be read with this correction therein that the same may conform to the record of the case in the Patent Office.

Signed and sealed this 4th day of May, A. D., 1909.

[SEAL.]

C. C. BILLINGS,
Acting Commissioner of Patents.