United States Patent [19]

Jacobs

[11] **3,850,363**

[45] **Nov. 26, 1974**

[54] **CARTON**

[76] Inventor: **Lester G. Jacobs,** 3241 Airway St. S.E., Wenatchee, Wash. 98801

[22] Filed: **July 16, 1973**

[21] Appl. No.: **379,345**

[52] **U.S. Cl.** ..... **229/51 R,** 229/51 TS
[51] **Int. Cl.** **B65d 5/54,** B65d 85/34
[58] **Field of Search** ..... 229/51 R, 51 DB, 51 S, 229/51 AS, 51 TS, 51 TC, 51 D, 6

[56] **References Cited**

UNITED STATES PATENTS

2,056,032	9/1936	Berman	229/51 DB
2,094,783	10/1937	Belsinger	229/51 DB
2,141,252	12/1938	Prindle	206/DIG. 4
2,706,076	4/1955	Guyer	229/51 TS
3,276,665	10/1966	Rasmussen	229/51 TS
3,276,666	10/1966	Johnson	229/51 AS
3,343,746	9/1967	Shiffman	229/51 DB

Primary Examiner—Donald E. Watkins
Attorney, Agent, or Firm—Wells, St. John & Roberts

[57] **ABSTRACT**

A carton for storage, shipment and display of produce, such as fresh fruit or vegatables. The carton includes a removable top cover section plus an upwardly open carton section having a bottom supporting wall and upright peripheral side and end walls. Produce is received within the carton for usual storage and shipping purposes arranged in well-ordered layers on parallel horizontal trays. A substantial portion of the side and end walls of the upwardly open carton section are removable for display purposes. This is accomplished by means of a rip cord or ribbon secured about the interior of the walls at a location near the bottom of the upwardly open carton section. The cord extends circumferentially about the walls and is accessible through a tab in one carton wall so that it can be manually ripped for pulling purposes. The resulting sleeve can then be lifted vertically, leaving the layers of exposed produce in their original trays.

1 Claim, 3 Drawing Figures

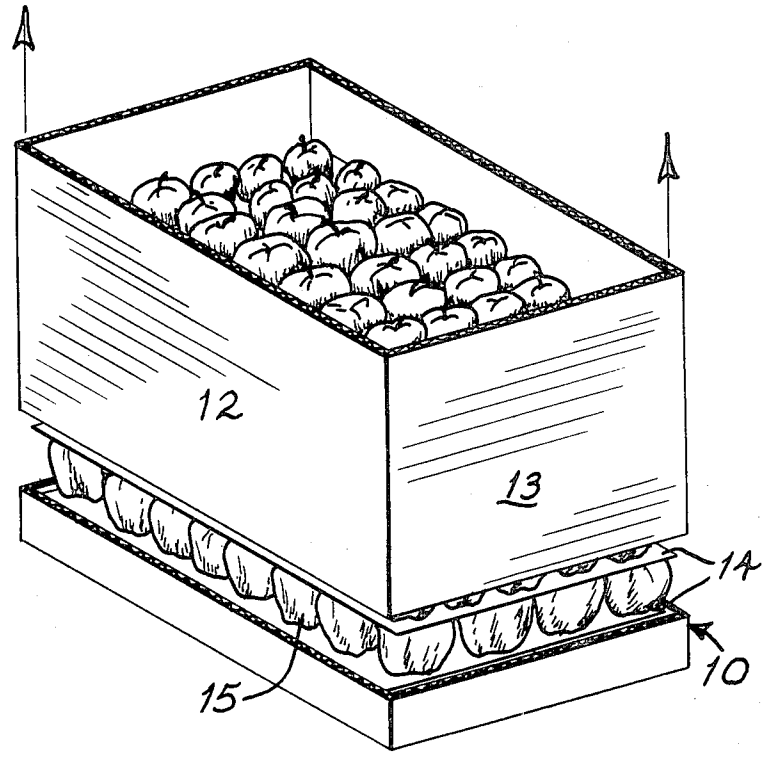

FIG 1

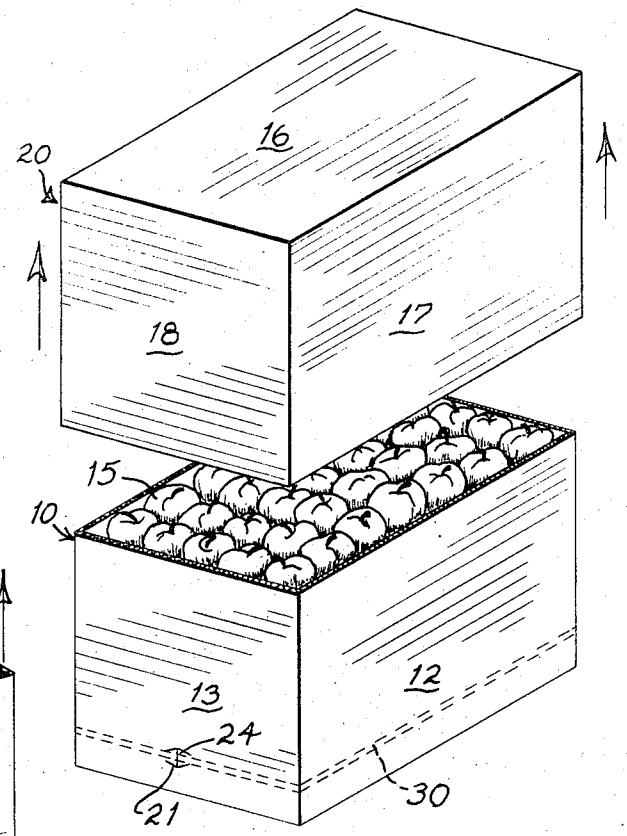

FIG 2

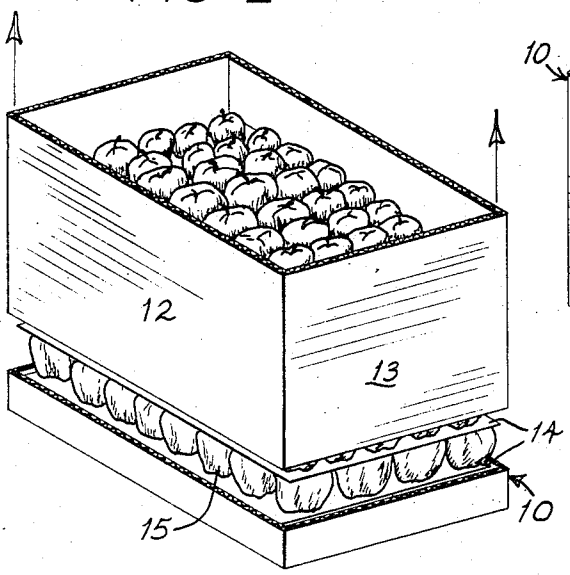

FIG 3

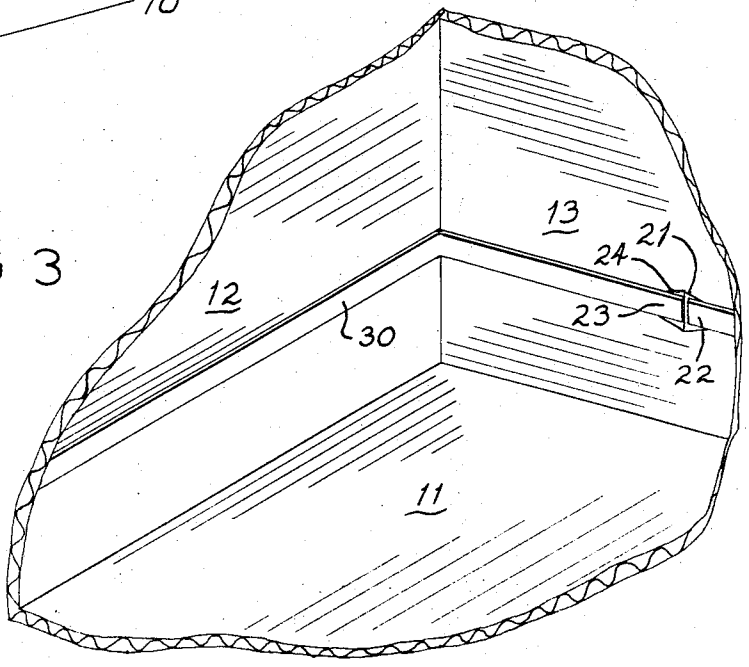

CARTON

BACKGROUND OF THE INVENTION

This invention is concerned with an improved carton for displaying produce such as fruits or vegetables. It is presently conventional in the packing of much produce, such as apples, to carefully stack the produce in layers, using horizontal protective trays arranged parallel to the bottom wall of a carton. In addition, such produce is often individually wrapped in protective tissue wrappings. However, when the produce reaches the retail market, it is removed from this protective environment and loosely arranged in bins, where it is subject to damage due to handling by the retailer and by customers. Furthermore, there is no convenient way to assure that the produce is sold in a controlled time sequence, and often the older produce remains in the bin until it must be discarded. Furthermore, the loose stacking of bulk produce makes impossible the controlled cooling of the fruit or vegetables desirable to maintain freshness.

According to this invention, a rip cord is provided about the lower portion of a conventional produce carton to enable the user to easily remove a substantial portion of the carton side and end walls in the form of an open sleeve, without disturbing the stacked arrangement of the layers of produce. The produce remains in a neat stacked arrangement, facilitating circulation of cooling air through the layers of produce. Sales of the produce are assured in a progression from the top of each stack downwardly. Newer cartons of produce can be easily placed beneath those that are already opened. Damage to the produce due to handling is minimized.

SUMMARY OF THE INVENTION

The invention disclosed herein essentially comprises an improvement in a packing carton for produce such as fruit or vegetables. It involves the utilization of a single length of flexible cord arranged circumferentially about the interior surfaces of the lower carton section. One end of the cord is anchored to the carton walls and its remaining end is free for manual engagement by means of a tab formed in the carton at a location adjacent to its anchored end. Pulling of the cord severs the bulk of the carton walls from the bottom of the carton, so that it can be lifted vertically, as an open sleeve, without disturbing the carton contents.

It is a first object of this invention to provide a practical improved carton which assures full benefit at point of sale from conventional tray packing processes now in use for shipping and storage purposes only.

Another object of this invention is to provide such an improved carton which does not require any substantial alteration in the conventional carton structure other than the addition of a rip cord as specified.

Another object of this invention is to provide an improved carton which permits the conventional storage carton to serve as a display unit without further handling of the produce.

These and further objects will be evident from the following disclosure, taken together with the accompanying drawings which illustrated one preferred form of the invention.

DESCRIPTION OF THE DRAWINGS

FIG. **1** is a perspective view of a filled carton and cover;

FIG. **2** is a perspective view showing removal of the lower carton sleeve after being severed by operation of the rip cord; and

FIG. **3** is an interior fragmentary perspective view at an enlarged scale, illustrating the arrangement of the cord within the carton.

DESCRIPTION OF THE PREFERRED EMBODIMENT

The drawings illustrate the invention as applied to a corrugated carton for shipment, storage and display of apples. It is to be understood that the same features can be applied to other cartons of different sizes and configurations used for storage, shipment and display of other fresh produce, such as fruit or vegetables.

The carton, shown partly assembled in FIG. **1,** comprises a lower carton section **10** and a removable cover **20.** The lower carton section **10** and removable cover **20** are complementary to one another. Cover **20** is placed over carton section **10** for protection and strength during shipment and storage. It is lifted from carton section **10** to provide access to the contents of the carton section.

The lower carton section **10,** which is modified according to this invention, typically comprises a bottom wall assembly **11** joined about its edges by enclosing side walls **12** and end walls **13.** All of these walls are rectangular. The side and end walls **12** and **13** extend vertically upward from the bottom wall assembly **11** an equal distance, terminating along upper edges parallel to the bottom wall assembly **11.**

The lower carton section **10** is upwardly open for reception of fresh produce, illustrated as apples **15.** The apples **15** can be either unwrapped (as shown) or individually wrapped in protective tissue, which can be untreated or chemically treated to enhance storage. The produce is typically arranged in a vertical stacked array of layers supported on horizontal trays **14** having recesses or indentations to support the individual articles. Trays **14** are stacked vertically, each being parallel to the bottom wall assembly **11.**

The cover **20** includes a top wall assembly **16** and depending side walls **17** and end walls **18.** The walls **17, 18** are coextensive in height with the side walls **12** and **13.** They are arranged so as to frictionally overlap the outer surfaces of walls **12, 13** to provide double thickness of carton walls in the vertical position. This facilitates vertical stacking of the cartons and provides additional yieldable protection about the side surfaces of the carton during shipment and storage.

The modification made according to this disclosure involves the addition of a single length of flexible cord or ribbon **30** located about the interior surfaces of the side walls **12** and end walls **13** in the lower carton **10** (FIG. **3**). A nylon ribbon secured to walls **12** and **13** and having longitudinal strands capable of cutting the corrugated carton wall structure is preferable as cord **30.** The cord **30** is arranged parallel to the bottom wall assembly **11** and is spaced upwardly adjacent from the bottom wall assembly. As shown in FIG. **2,** a suitable height would be approximately the elevation of the first tray arranged above the bottom wall assembly **11.** Cord **30** must be securely held in place by adhesive, tape, or

other fastening means so that it is arranged in the horizontal location necessary for its operation. At least one end **22** of the cord **30** must be securely anchored to the interior carton wall surfaces by adhesive or a mechanical fastener (not shown). The remaining end **23** of cord **30** is fixed to a tab **24** formed through an upright carton wall, which is cut in the form of an H-shaped slit **21.**

The production of the carton does not require modification of existing carton forming techniques. The cord **30** can be secured to the carton blank prior to forming of the carton, or can be added to the carton section after it is formed. The carton is then filled with produce in the conventional manner, each horizontal layer of fruit or vegetables being arranged on protective horizontal trays **14.** The covered carton is then stored and shipped to the point of sale.

This carton is designed to facilitate use of the carton at the point of sale. Rather than removing the fruit or vegetables from the carton for bulk display purposes, the retailer is provided with a carton which becomes a display piece easily handled and stored in an open refrigerated display case. By manually pulling the free end of cord **30** about the circumference of the carton section **10,** the user can readily remove a substantial portion of the side walls **12** and end walls **13** in the form of an encircling sleeve as shown in FIG. **2.** Removal of this sleeve exposes the contents of the carton in a neatly stacked array of layers, there being no necessity for further handling or rearrangement of the produce. The produce, being stacked in trays, is arranged spatially to permit free circulation of cooling air through the layers of fruit or vegetables, enchancing storage at the point of sale. Furthermore, the neat arrangement of produce in stacked layers will discourage handling by purchasers. It tends to prevent purchasers from digging through the stack in the hope of finding better produce beneath the top. Since the bottom wall assembly **11** and lower portions of walls **12, 13** remain intact, a substantial tray is provided at the bottom of each display unit. The supportive carton tray enables that unit to be lifted so that new cartons can be placed beneath it and opened systematically in a progression. This assures that the first produce added to the display will be removed before newly added produce.

The use of a flexible cord **30** does not detract from the strength of the carton, which is not perforated or otherwise structurally altered. The carton can be stored in refrigerated areas at the usual high humidity. The interior rip cord does not in any way detract from the usual carton wall strength. The improved carton will stack, ship and store produce without incident.

Minor changes might be made with respect to the specific structure illustrated, while still retaining the basic principle disclosed above. For these reasons, only the following claims are intended to define the scope of my invention.

Having thus described my invention, I claim:

1. In a carton for fresh produce having a carton section of rectangular configuration including a bottom wall assembly and full height side and end walls joined about the bottom wall assembly, the side and end walls being open across their upper edges for reception of produce in vertically stacked layers on horizontal trays arranged parallel to the bottom wall assembly, the improvement comprising:

a single length of flexible cord located circumferentially about the interior surfaces of the side and end walls of the carton section at an elevation adjacent to the bottom wall assembly;

at least one end of the cord being secured to the carton section;

the remaining end of the cord being fixed to a tab formed on the carton adjacent to said one end of the cord, and manually accessible from the carton section exterior, whereby the tab and cord can be manually pulled outward of the carton section to sever the side and end walls of the carton section without disturbing the produce as arranged in the trays;

the cord being located about the side and end walls at a height above the bottom wall assembly substantially equal to the elevation of the first tray above the bottom wall assembly.

* * * * *