Dec. 22, 1964 P. ABRAMSON ETAL 3,162,738

MAGNETICALLY ACTUATED SWITCHING DEVICE

Filed Nov. 30, 1962

2 Sheets-Sheet 1

FIG. 1

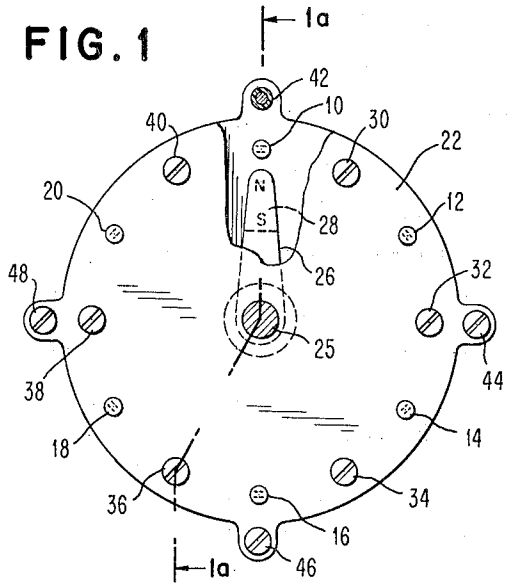

FIG. 1a

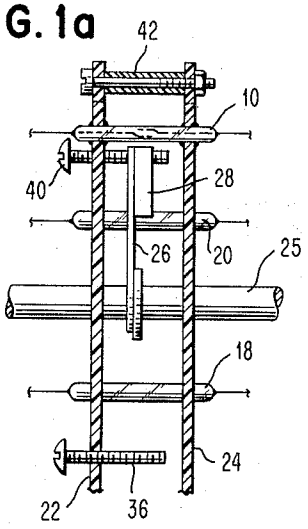

FIG. 2

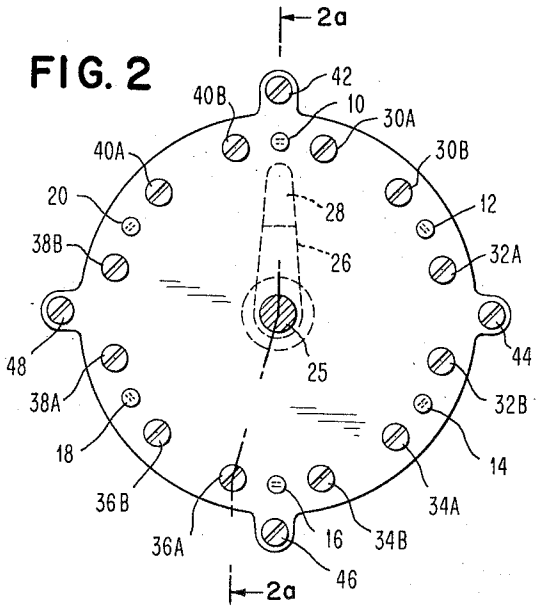

FIG. 2a

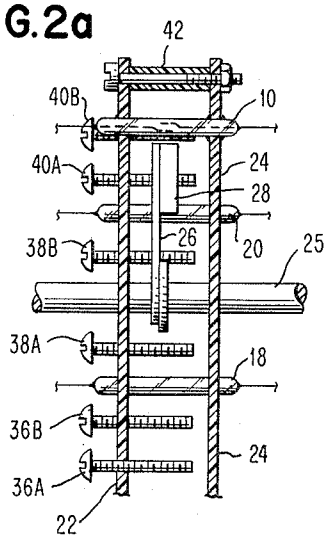

INVENTORS

PAUL ABRAMSON
HENRY C. FOX

BY Curtis Crikes Jr.

ATTORNEY

Dec. 22, 1964 P. ABRAMSON ETAL 3,162,738

MAGNETICALLY ACTUATED SWITCHING DEVICE

Filed Nov. 30, 1962 2 Sheets-Sheet 2

FIG. 3

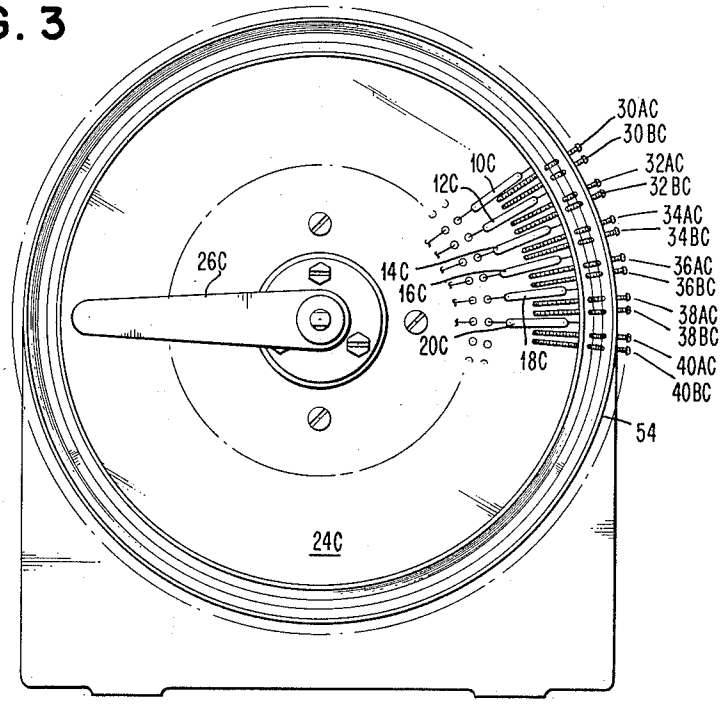

FIG. 3a

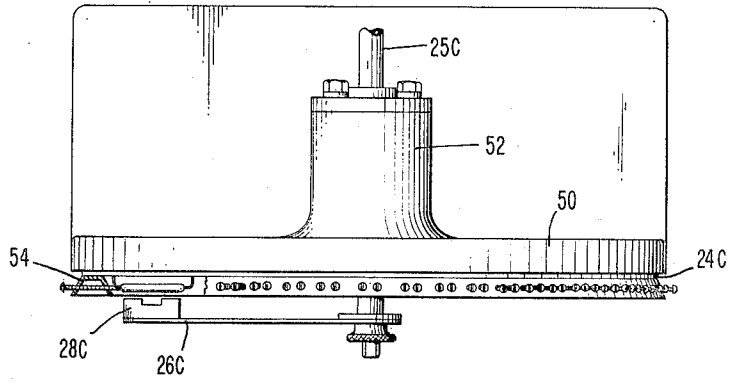

United States Patent Office 3,162,738
Patented Dec. 22, 1964

3,162,738
MAGNETICALLY ACTUATED SWITCHING DEVICE

Paul Abramson, Yorktown Heights, and Henry C. Fox, Stormville, N.Y., assignors to International Business Machines Corporation, New York, N.Y., a corporation of New York

Filed Nov. 30, 1962, Ser. No. 241,315
1 Claim. (Cl. 200—87)

This invention relates to magnetically actuated switching devices, and more particularly to switching devices which are operable in response to relative motion between the switching device contacts and a magnetic actuating member.

There are many purposes for which switching is required in response to mechanical movement. These include limit switches, float switches, and the like. Multiple contact switches providing sequential switching in response to movement are also required for many purposes. Traditionally, these include commutators for dynamo-electric machinery, as well as electrical devices for signaling and information handling systems. Devices of this type have been employed for the purpose of emitting a sequential series of voltage pulses on a series of output connections, for establishing connections momentarily to different signal sending or receiving stations, for coding or decoding signal information, and also for simply giving a signal which indicates a physical position or displacement of a moveable member. For many of these purposes, particularly when low power signals are to be handled, extremely rapid operation of the switching device is desired together with characteristics of minimum friction and wear. One way of achieving these objectives is to employ switch contacts which themselves are magnetic, or which are carried by thin magnetic members which are attracted together to close the switches when they are subjected to a magnetic field from a relatively moveable magnet. By employing structures of this type, the inertia of the switch contact members can be kept at a minimum and no friction whatsoever is involved between the relatively moveable magnetic member and the switch members. This is because the switch operation takes place entirely through the mutual magnetic affects rather than through any mechanical contact between the magnetic member and the contact members. One switch of this type which has been found to be very satisfactory for the purposes of the present invention is the so-called "reed" switch in which the magnetic contact members are enclosed within a glass envelope. Switch devices of this type are disclosed in "Development of Reed Switches and Relays," by O. M. Hovgaard et al., volume 34, Bell System Technical Journal, pages 309 et seq. The reed switch unit has a number of important advantages deriving from the fact that it is a sealed unit. Because of the fact that there is very little arc within the enclosed atmosphere as the contacts open, extremely long contact life is possible. Another very important advantage is that structures employing these switch contacts can be used in hazardous locations because any switching arc is enclosed within the glass envelope and is not open to the environmental atmosphere to contribute to fire and explosion hazards. Another advantage of the reed switch structure is that it is operable in response to a very small magnetic field.

However, one of the most serious disadvantages in the use of reed switches with their sealed envelopes is that the contact tensions and contact gaps, and thus, operating characteristics, are not easily adjustable. Furthermore, the manufacturing tolerances on these devices vary over a rather wide range. The result is that when the reed switch is actuated, as in the present invention, by bringing

the reed switch and a magnet into physical proximity to one another, it is difficult to predict at what point of proximity the reed switch will be operated and at what point of departure it will be released. For some purposes it is extremely important that this operating point should be predictable or adjustable.

Accordingly, it is one important object of the present invention to provide a switching device which is operable in response to relative displacement between an actuating magnet and magnetic switch contacts and in which the operating point of the switch contacts in relation to the proximity of spacing is easily determinable.

Another object of the invention is to provide a sequential switching device operable in response to relative displacement between a magnetic actuating member and magnetic switch contacts in which the point of opening of the contacts may be easily determined.

As with other magnetically operable switching devices, with reed switches, the magnetic forces required to pick up and close the contacts are much greater than the magnetic forces required to maintain the contacts in the closed position. With reed switches, the ratio of these magnetic forces may be in the order of four to one or greater. Accordingly, the variations in the drop-out operating characteristic from one reed switch to another are greater than the variations in the pick up characteristic.

Therefore, it is another object of the present invention to provide switching devices of the above description in which the individual switch drop-out points may be easily determined.

Another important object of the present invention is to provide sequential switching devices involving relative movement between a magnetic actuating member and a plurality of enclosed reed switches which are operated in sequence by the magnetic actuating member and in which the relative timing of operation of the various reed switches may be easily determined and in which different timing or displacement in operating relationships may be achieved as desired.

In carrying out the objects of this invention, in one preferred embodiment thereof, a switching device is provided which is operable in response to a mechanical displacement and which includes at least one switch of the type in which the contact members themselves are magnetically actuable in response to mutual magnetic attraction in the presence of a magnetic field, and a magnetic actuating member for supplying the actuating magnetic field. The switch and the magnetic member are arranged to provide for relative displacement therebetween for actuation of the contact members when the magnetic member is in proximity to the switch and for release of the contact members when the magnetic member is not in proximity to the switch.

Magnetic shunt members are provided which are positionable with respect to the switch on each side thereof to respectively control the actuation and release of the contact members by shunting the magnetic field provided by the magnetic actuating member before and after the positioning thereof in proximity to the switch.

In one specific embodiment a plurality of reed switches are arranged in a circular array, and at least one magnet member is arranged on a rotatable arm to be successively brought into proximity to the various individual switches in sequence as the arm is rotated. Adjustable magnetic shunt members are arranged between each reed switch and the next. The magnetic shunt member, by its position, serves to determine the drop-out point for the last preceding reed switch, and the pick-up point for the next succeeding switch. In a preferred embodiment of the invention, two such magnetic shunt members are provided between each pair of adjacent reed switches, the first being independently positionable to determine the drop-out

point of the last succeeding reed switch, and the second one being independently positionable to determine the pick up point of the next succeeding reed switch.

Further objects and advantages of the invention will be apparent from the following description and the accompanying drawings which are as follows:

FIGURE 1 is a front view of a preferred embodiment of the invention.

FIGURE 1*a* is a side view, partially in section, of the embodiment of FIGURE 1.

FIGURE 2 is a front view of a modified embodiment of the invention.

FIGURE 2*a* is a side view, partially in section, of the embodiment of FIGURE 2.

FIGURE 3 is a front view of a further modified embodiment of the invention.

And FIGURE 3*a* is a top view, partially in section, of the embodiment of FIGURE 3.

Referring more particularly to the first embodiment of the invention as shown in FIGURES 1 and 1*a*, there are shown a number of reed switches **10**, **12**, **14**, **16**, **18** and **20** arranged in a circular pattern. These switches are mounted and retained in this circular pattern by supporting plates **22** and **24** which are preferably composed of a suitable non-magnetic material. At the center of the structure there is a rotatable shaft **25** having an arm **26** with a permanent magnet **28** fixed to the tip of the arm **26**. As the shaft **25** and the arm **26** rotate, the magnet **28** is successively brought into proximity to each of the reed switches **10** through **20**, causing each of them to close and open in sequence. Between each adjacent pair of reed switches there is provided an adjustable magnetic shunt member. These are in the form of screws **30**, **32**, **34**, **36**, **38** and **40** composed of soft magnetic material. Ordinary steel or iron screws may be used for this purpose. These screws act as shunts for the magnetic flux provided by the magnet **28** as it passes. The shunt serves to remove the magnetic flux of the permanent magnet from the reed switch which was last actuated by the magnet to cause that reed switch to disengage and open. Likewise, the presence of the shunt member serves to control the timing at which the magnetic field from the magnet **28** is applied to the next succeeding reed switch.

For instance, with the arm **26** in the position shown in FIGURE 1, reed switch **10** will be actuated. If the arm is rotated clockwise, as the magnet **28** approaches into close proximity with the shunt member **30**, the magnetic field will be diverted from the reed switch **10** to the shunt member **30** so that the reed switch **10** will be deprived of the magnetic field and will open. Furthermore, the reed switch **12** will not be subjected to any substantial field from magnet **28** until the magnet **28** passes the shunt member **30** in the direction of reed switch **12**. Until then, the magnetic field is substantially fully taken by the shunt.

However, the effectiveness of the magnetic shunt formed by the screw **30** is adjustable. It is made more effective by advancing the screw into more complete alignment with the magnet **28** and the associated reed switches, and it is made less effective by retracting the screw so that it is not in such complete alignment. In this way, the magnetic shunt members may be made more or less effective to compensate and adjust for individual deviations and variations in the behavior of the reed switches. As explained above, since the reed switches are sealed units, it is very difficult, if not impossible, to adjust the operating gaps between the magnetic contact levers and to adjust the operating tensions and compensate for differences in magnetic characteristics of the magnetic reed contact levers. Accordingly, wide variations in the operating characteristics of different reed switches are encountered, and the adjustably positionable magnetic shunt members provide a means for compensating for most of these variations.

It is one of the advantages of this invention that a relatively small permanent magnet, such as **28**, may be employed as the magnetic actuating member. This magnet member may be composed of a conventional aluminum-nickel-cobalt permanent magnet alloy, and it may have dimensions in the order of one quarter of an inch by one quarter of an inch by three quarters of an inch. The parts of the structure are preferably arranged to provide a relatively close spacing of the magnet to each reed switch at its closest proximity (in the order of one sixteenth of an inch). The magnet is provided with a sufficient magnetic field strength to actuate the reed switches at this spacing, but with a field strength which is not much greater than necessary for this purpose. While a permanent magnet is preferred for the magnet **28**, it is possible to use an electro-magnet for this purpose.

The supporting plates **22** and **24** are preferably maintained in spaced relationship by fasteners such as non-magnetic screw and sleeve assemblies indicated at **42**, **44**, **46** and **48**.

The adjustable magnetic field shunt members are particularly effective in adjusting for any possible overlap in the operation of adjacent reed switches. For instance, by retracting the adjustable shunt member and making it less effective, the first reed switch, such as **10**, remains in operation longer, and the second reed switch, such as **12**, picks up earlier so that there may be an overlap in the operation of these two adjacent reed switches which may be referred as "make-before-break." This operating characteristic may be desired for certain purposes. On the other hand, if the magnetic shunt member such as **30** is positioned in the fully inserted position, then the switch **10** will be released early, and the switch **12** will be picked up late, to provide a "break-before-make" characteristic. Thus, it is apparent that by intermediate adjustments of the shunt **30**, any desired timing relationship between the release of switch **10** and the engagement of switch **12** may be obtained, including the possibility of an adjustment with which the release of switch **10** substantially coincides with the engagement of switch **12**. The adjustability of this break-make relationship makes the operation of the device substantially independent of individual switch contact characteristic variations.

There are many purposes for which switching devices of the present type are required in which it is very desirable to be able to provide for absolutely precise timing of the period of engagement for each switch in relationship to the rotational position of the arm **26**. This requirement is in addition to the requirement for determination of the possible overlap or gap in the "break" of one switch and the "make" of the next switch. Thus, in the switch device of FIGURE 1, it may be possible to adjust for widely varying switch characteristics and to have substantial coincidence of each contact break time with the next subsequent make time, but there may be rather widely varying periods of operation of individual switches because of individual differences in operating characteristics.

FIGURE 2 and associated FIGURE 2*a* illustrate a modification of the invention in which this problem is taken care of by providing two magnetic shunt members between each pair of adjacent switches. Thus, between switches **10** and **12**, there are provided magnetic shunt members **30A** and **30B**. In the next space, magnetic shunt members **32A** and **32B** are provided, and so on. In this modified structure, it is primarily the function of shunt member **30A** to control only the drop-out characteristic of switch **10**, and it is primarily the function of shunt member **30B** to control only the pick-up characteristic of switch **12**. Furthermore, it is primarily the function of shunt member **40B** to provide an adjustable control for the pick-up characteristic of the switch **10**. Accordingly, with an independent adjustment for both pick up and drop out of each switch element, the timing of the operation of each switch element with respect to the rotation of the arm **26**, and with respect to the operation of the other switch elements, may be completely deter-

mined and may be made completely independent of the inherent variations in individual switch characteristics. This arrangement has been found to be very valuable and very satisfactory where extremely accurate timing in the switch operations is necessary. In other respects, the structure of FIGURE 2 is identical to the structure of FIGURE 1 and corresponding parts are similarly numbered.

FIGURE 3 shows a further modification of the embodiment of FIGURE 2 in which both the reed switches and the magnetic shunt members are arranged radially in substantially the same plane. In this embdiment, as shown more clearly in the top view of FIGURE 3*a*, the magnet member 28C exerts its magnetic force in an axial direction rather than in a radial direction as in FIGURE 2. The parts of the embodiment of FIGURES 3 and 3*a* are lettered similarly to corresponding parts of FIGURE 2, but with the addition of a subscript "C." The embodiment of FIGURE 3 is the preferred embodiment because it provides certain features of ease of assembly, as well as the possibility of simple adjustment of the gap between the magnetic member 28C and the reed switches. Furthermore, the magnetic member 28C has a horseshoe design and it is proportioned to be substantially co-extensive with the length of each reed switch which it actuates. This is a more efficient magnetic member configuration. Because of the modifications in the structure of FIGURE 3, only a single support member 24C is employed, the support member 22 having been omitted. The support member 24C, however, is supported on a frame 50 which also includes a bearing 52 for the shaft 25C.

The adjustable shunt members 30AC through 40BC are supported within openings formed in a continuous non-magnetic metal spring member 54, which is illustrated more clearly in a cut-away portion of FIGURE 3*a* at the lower left corner thereof. This is a simple stamped metal spring member containing holes which are of a proper size to permit passage of the adjustable magnetic shunt screws, but at the same time small enough to bind sufficiently to form locking threads for the shunt screw members.

As indicated in FIGURE 3 the reed switches and the shunt screw members are closely spaced together so that 50 reed switches may be positioned in the complete circular array. It is quite apparent that by increasing the radius at which the reed switches are positioned, any desired number of reed switches can be arranged for actuation by the magnet 28C as the arm 26C rotates.

It will be apparent also that other physical configurations may be employed as variations of the structures illustrated in these drawings. For instance, the reed switches and magnetic shunt members can be arranged in an elongated linear structure instead of a circular array and the actuating magnet 28C can be carried past the switches on a suitable moveable carriage. It is clear also that the magnet can be fixed and the switches can be moveable to travel successively into proximity with the magnet, or both the switches and the magnet can be moveable so long as relative movement is obtainable.

One of the advantages of the switching devices of the present invention is that, with the independent reed switches as switch contact members, completely independent circuits may be switched through each pair of contacts. That is, each pair of contacts may switch a circuit which is completely independent of the circuits of every other pair of contacts, or any desired inter-connections between various contacts may be provided on both circuit sides of each switching gap. However, if desired, all of the reed switches may be connected in common on one side and thus the device of the invention may be used as a commutator.

While the invention has been particularly shown and described with reference to preferred embodiments thereof, it will be understood by those skilled in the art that various changes in form and details may be made therein without departing from the spirit and scope of the invention.

The invention we claim is as follows:

A commutative switching device, comprising:

(*a*) a plurality of magnetically actuable reed switches mounted equidistantly from a central axis in a common plane, each switch having its reeds aligned along a different radial line;

(*b*) an arm journalled for rotation about said central axis in a plane spaced from the common plane of said switches;

(*c*) a horseshoe permanent magnet mounted on the said arm with its pole pieces facing the plane of said switches and radially aligned on the said arm at a distance equal to the distance of said switches from said axis, whereby the magnet will magnetically coact with each switch in succession when said arm is rotated;

(*d*) and a pair of threaded magnetic shunt members straddling each of said switches, the said shunt members being mounted in threaded fasteners in the plane of the said switches with their axes aligned along radial lines, whereby radial adjustment of the position of the respective shunts of each pair of shunts permits separate control over the closing and opening of the reeds of each switch with respect to the angular position of the said arm.

References Cited in the file of this patent

UNITED STATES PATENTS

3,068,333	Hewitt	Dec. 11, 1962
3,087,030	Shebanow	Apr. 23, 1963