G. FREDERICKSON.

COMBINATION CABINET.

APPLICATION FILED MAR. 2, 1914.

1,175,947. Patented Mar. 21, 1916.

Fig. 2

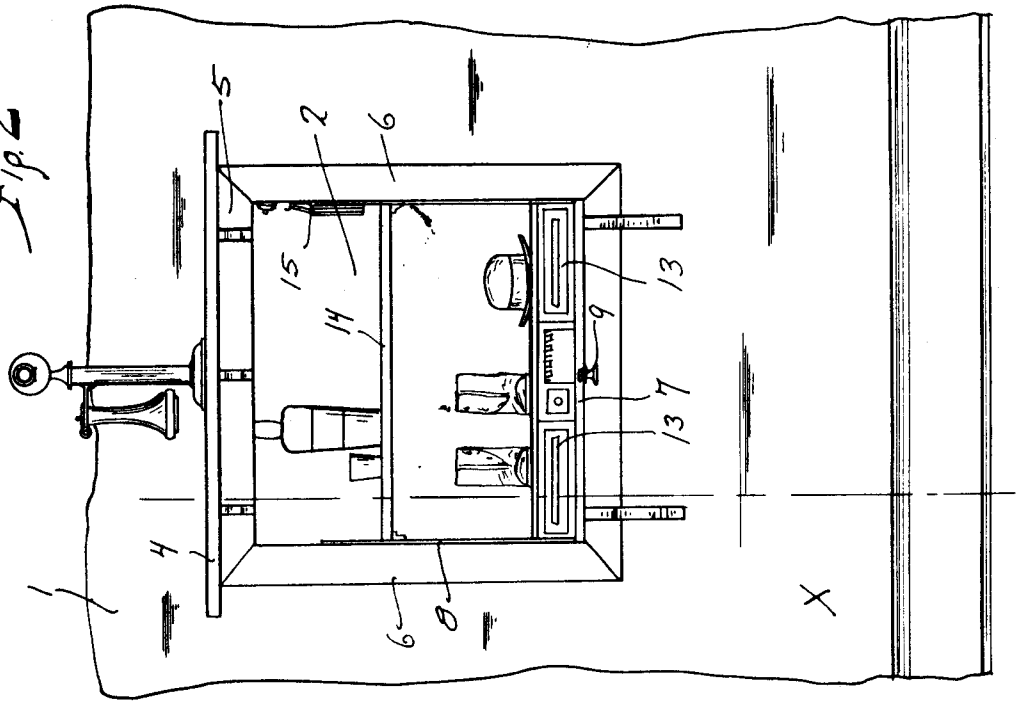

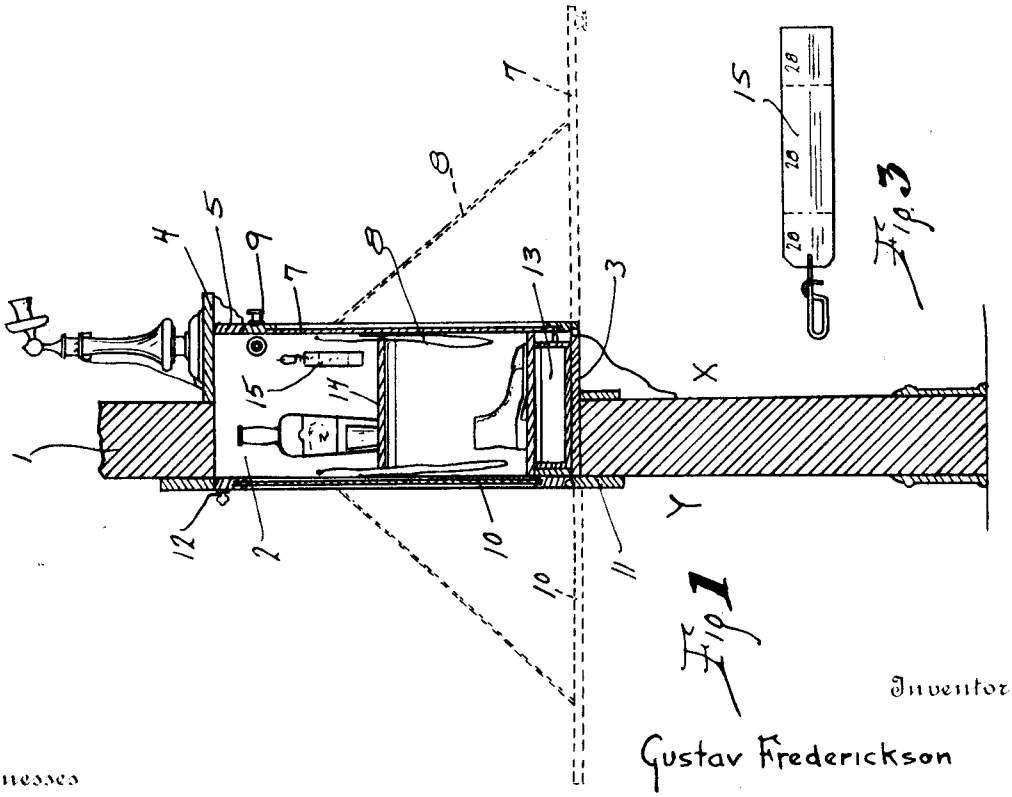

Fig. 3

Fig. 1

Witnesses

Harold Scantlebury

Ansley Sloan

Inventor

Gustav Frederickson

By Herbert E. Smith

Attorney

UNITED STATES PATENT OFFICE.

GUSTAV FREDERICKSON, OF SPRINGDALE, WASHINGTON, ASSIGNOR OF FIFTY-ONE ONE-HUNDREDTHS TO ALLEN MEISENHEIMER, OF SPOKANE, WASHINGTON.

COMBINATION-CABINET.

1,175,947. Specification of Letters Patent. Patented Mar. 21, 1916.

Application filed March 2, 1914. Serial No. 821,999.

To all whom it may concern:

Be it known that I, GUSTAV FREDERICKSON, a citizen of the United States, residing at Springdale, in the county of Stevens and State of Washington, have invented new and useful Improvements in Combination-Cabinets, of which the following is a specification.

My invention relates to combination cabinets and it provides a structure of this character which is particularly adapted for use in hotels, restaurants, club houses, private residences, etc.

The particular construction to be described herein and comprising my invention embodies a combination cabinet particularly suited for use in hotels. It provides a simple and efficient means of serving the guests without disturbing them by entering the rooms which they occupy to fetch and carry articles of necessity to and from.

In the drawings annexed hereto and forming a part of this specification:—Figure 1 illustrates in vertical section a combination cabinet constructed according to my invention. Fig. 2 illustrates in side elevation the cabinet shown in Fig. 1, as viewed from the interior of the guest's room. Fig. 3 is a tag which may be used in connection with the cabinet.

Referring to the drawings, the side wall 1 of the room contains an aperture 2, the letter X representing the room side of the wall and Y the corridor side of the wall. Mounted on the wall at the bottom of the aperture 2 is a sill member 3 extending horizontally outward into the room but lying flush with the corridor side of the wall. At the top of the aperture a ledge 4 is secured to the wall and extends horizontally outward into the room parallel with the sill member 3. The ledge carries the jam member 5 on the under side thereof, and the side members 6—6 are secured to the sill 3 and ledge 4 serving in combination with the sides of the aperture to form a cabinet opening. Hinged to the sill 3, on the room side of the wall, is a door 7 adapted to drop down into the horizontal position shown by dotted lines serving as a desk, and supported in this position by the chain 8. In the closed position the door is secured to the jam 5 by means of the catch 9. On the corridor side of the wall a similar door 10 is hinged to the facing member 11 and adapted to drop down in the same manner as the door 7, being secured in the closed position by the lock 12.

Within the cabinet are mounted at the bottom thereof, drawers 13 for the purpose of holding stationery and writing materials. Also within the cabinet is mounted one or more shelves 14 adapted to hold bottles, boots, hats and other commodities such as guests may wish to send out of their rooms or have brought to their rooms. It will be noted that the top of the cabinet within the room forms a convenient shelf for the telephone.

In use the occupant of the room places whatsoever he wishes to have removed from his room within the cabinet and calls the bell boy or other messenger on the telephone to remove the article therefrom. It is not necessary for the bell boy or messenger to enter the room, it only being necessary for him to open the corridor side of the cabinet, and remove the article therefrom. Thus it will be seen that the combination cabinet constructed according to my invention eliminates the inconvenience attendant upon having bell boys and messengers entering the guests' rooms.

In combination with my cabinet a checking device may be used such as is shown at 15, whereby a record may be kept of the services performed. The check 15 is preferably divided into three portions, namely, a central portion 20 and two end portions 28, said portions being adapted to be torn, one from the other, and suitably inscribed, so that a systematic record of the checking may be kept.

It is to be understood that I do not limit myself to the exact construction described and claimed herein, but resort to such modifications as fall within the scope of my claim.

Having thus described my invention, what I claim is:—

In a service or like cabinet, a wall dividing an area to form a room side and a hall side and provided with an opening, a cabinet mounted in said opening and being open to the hall and room sides, a door for closing the hall side of the cabinet, a drawer casing having one or more drawers therein with the casing disposed in said cabinet in a

manner to cause the drawers to open toward the room side of the cabinet, the drawers being relatively close to the edge of the room side portion of the cabinet when closed, and a door for closing the room side of the cabinet and extending closely abreast of the drawers when the latter and the last named door are closed thereby preventing the drawers from being opened from the hall side of the cabinet, substantially as described.

In testimony whereof I affix my signature in the presence of two witnesses.

GUSTAV FREDERICKSON.

Witnesses:
B. H. TAYLOR,
ROY WAGNER.