3 Sheets—Sheet 1.

W. W. DUNN.

MACHINES FOR DRILLING ROCKS.

No. 194,419. Patented Aug. 21, 1877.

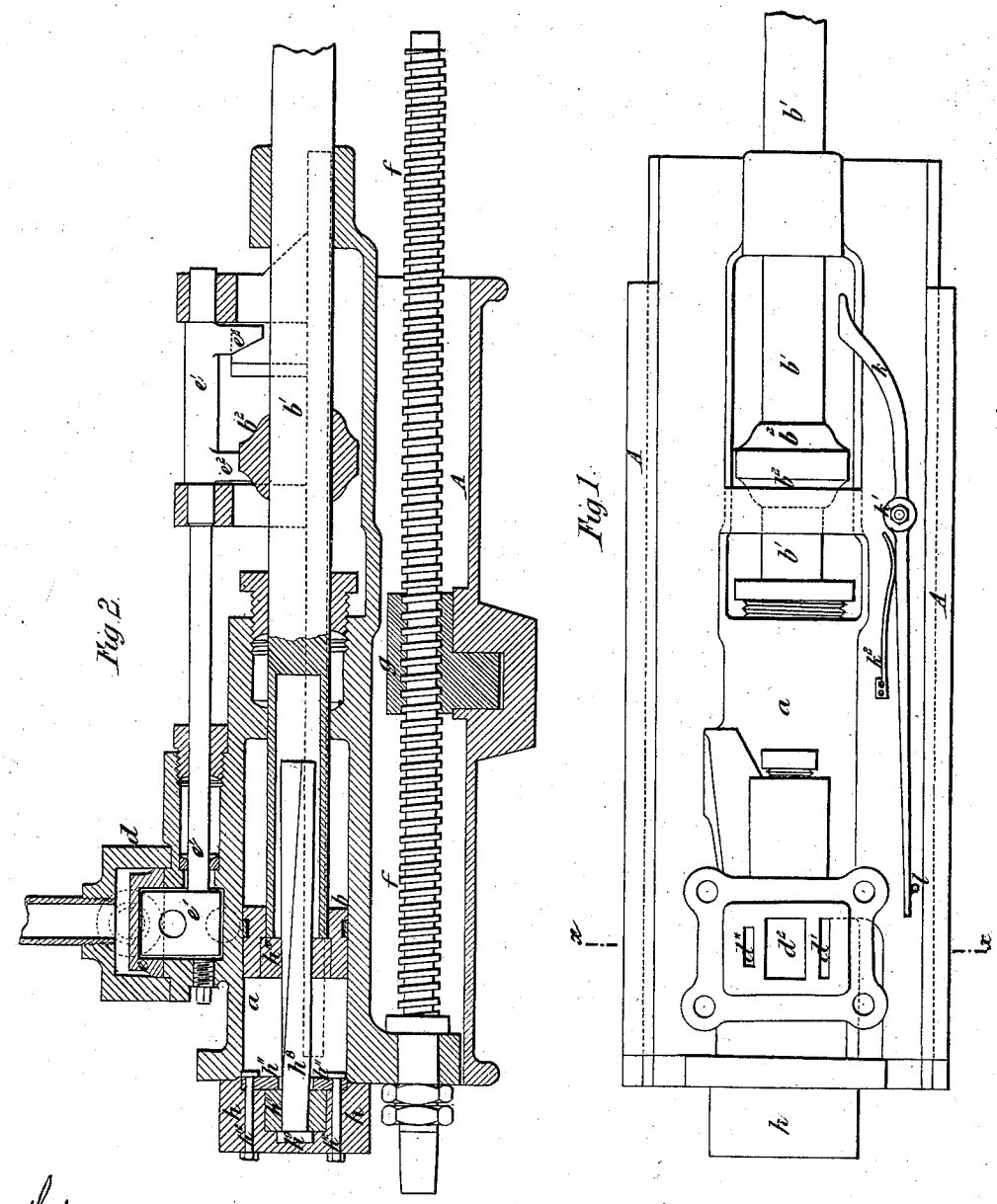

Witnesses
S. W. Seely
R. N. Dyer

Inventor
William W. Dunn
by Geo. W. Dyer & Co.
attys

N. PETERS, PHOTO-LITHOGRAPHER, WASHINGTON, D. C.

3 Sheets—Sheet 2.

W. W. DUNN.

MACHINES FOR DRILLING ROCKS.

No. 194,419. Patented Aug. 21, 1877.

Fig. 3

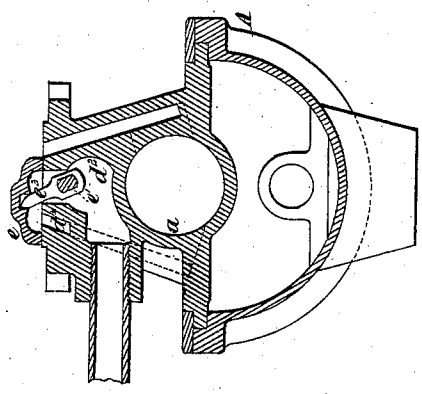

Fig. 6.

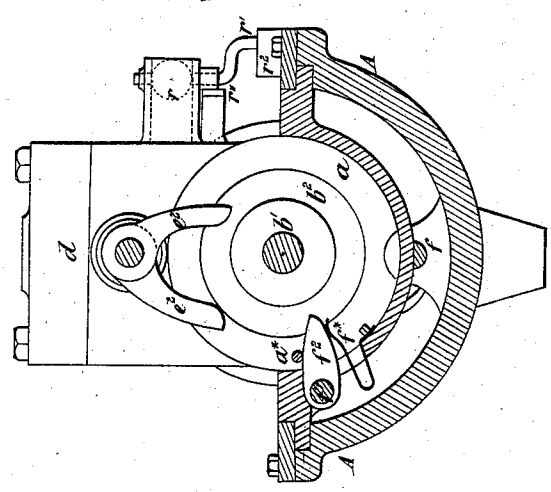

Fig. 5.

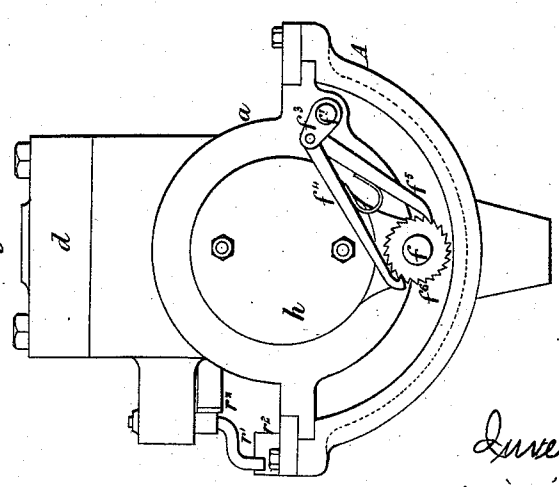

Witnesses
S. W. Seely.
R. N. Dyer.

Inventor
William W. Dunn
by Geo. W. Dyer & Co.
attys.

N. PETERS, PHOTO-LITHOGRAPHER, WASHINGTON, D. C.

3 Sheets—Sheet 3.

W. W. DUNN.

MACHINES FOR DRILLING ROCKS.

No. 194,419. Patented Aug. 21, 1877.

Fig. 4

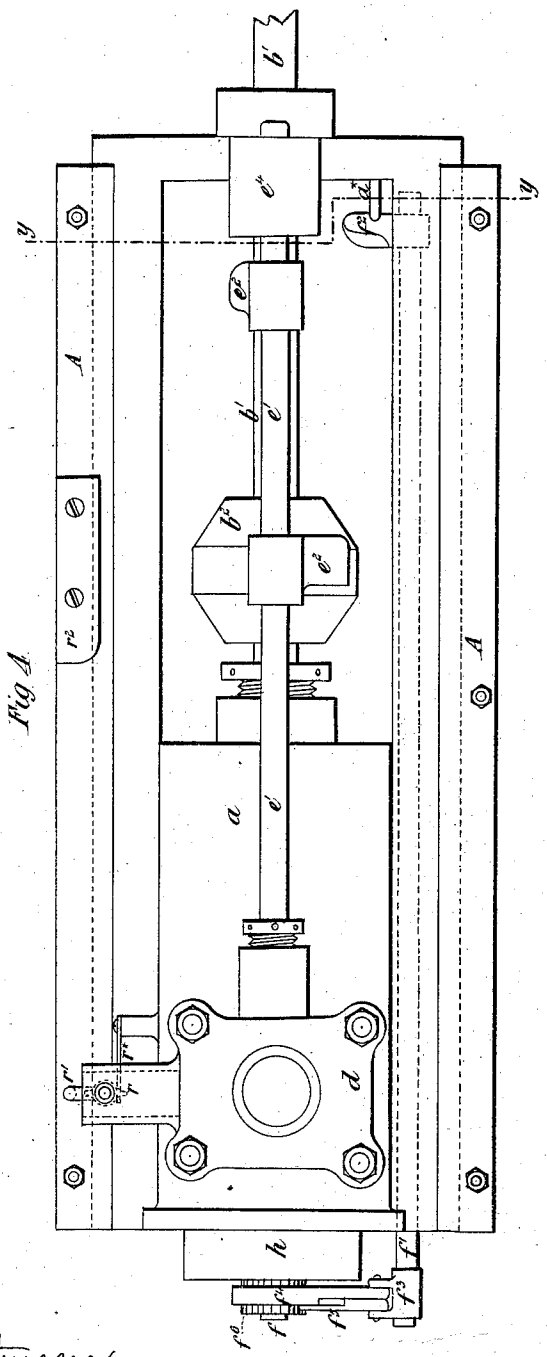

Fig. 7

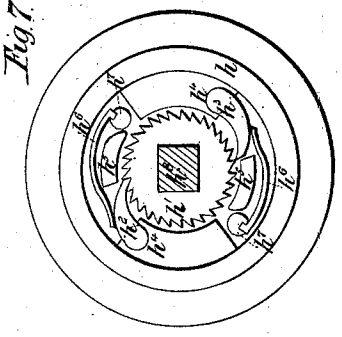

Fig. 9

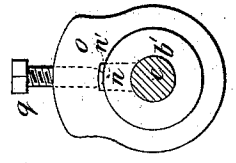

Fig. 8

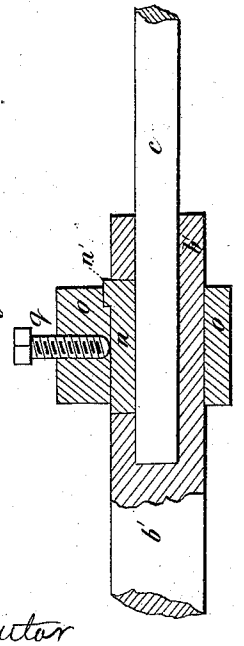

Witnesses.
S. W. Selly
R. F. Dyer,

Inventor
William W. Dunn
by Geo. W. Dyer & Co
attys.

N. PETERS, PHOTO-LITHOGRAPHER, WASHINGTON, D. C.

UNITED STATES PATENT OFFICE.

WILLIAM W. DUNN, OF SAN FRANCISCO, CALIFORNIA.

IMPROVEMENT IN MACHINES FOR DRILLING ROCKS.

Specification forming part of Letters Patent No. **194,419**, dated August 21, 1877; application filed May 22, 1877.

To all whom it may concern:

Be it known that I, WILLIAM WALLACE DUNN, of San Francisco, California, United States of America, have invented new and useful Improvements in Machinery for Drilling, Perforating, or Boring Rocks and other Hard Substances, which improvements are fully set forth in the following specification, reference being had to the accompanying drawings.

This invention relates to machinery for drilling or boring holes in rocks and other hard mineral substances in mining, tunneling, quarrying, and similar operations.

The machines to which my invention relates are of that class wherein the drilling or perforating implement is moved to and fro and turned on its axis by a piston that has a reciprocating and turning motion within a cylinder which is supplied with steam, air, or other actuating-fluid, directed alternately into both ends of the cylinder through the agency of a suitable valve.

The said improvements are fully illustrated in the accompanying drawings, which I will now proceed to describe.

Figure 1 is a plan of a machine constructed according to my invention, some portions of the same being removed. Fig. 2 is a longitudinal vertical section through the center of the said machine. Fig. 3 is a transverse section on the line *x x*, Fig. 1, showing various parts not shown in Fig. 1. Fig. 4 is a plan, showing the said machine provided with my improved automatic feed and stopping mechanism, hereinafter described. Fig. 5 is a rear end elevation of Fig. 4. Fig. 6 is a vertical transverse section on the line *y y*, Fig. 4. Figs. 7 to 9 show details of the said invention detached, and hereinafter described.

Like letters indicate the same parts throughout the drawings.

A is the main frame of the drilling-machine. *a* is the cylinder. *b* is the piston. b^1 is the piston-rod. *c* is the drill. *d* is the valve-chest. *e* is the valve. e^1 e^2 e^3 b^2 are parts of the mechanism for operating the same. *f* is the feed-screw. f^1 f^2 f^3 are parts of the devices for rotating the said screws. *g* is the feed-nut. *h* h^1 h^2 are parts of the mechanism for rotating the piston and drill. The letter *e* represents a slide-valve, and d^* d^1 the ports leading to the cylinder, so formed and arranged that the said valve slides to and fro transversely or laterally across the port-face of the cylinder *a*, instead of moving in the usual manner endwise or in the direction of the cylinder's length, as clearly shown in Figs. 1 and 3. This motion of the slide-valve is very advantageously obtained through the medium of the rocking shaft e^1 and arms e^2 arranged above the cylinder. The said shaft extends forward from the valve-chest *d*, and its outer extremity is supported in a bracket, e^4. This rocking shaft also has on it another arm, e^3, which works through the exhaust-port d^2, and projects into the cavity of the slide-valve *e*, as shown in Figs. 2 and 3. The two arms e^2, as shown in Fig. 6, are arranged to be acted upon by different portions of a conical protuberance or double-inclined plane, b^2, on the piston-rod b^1, in such a manner that the latter, by its to and fro movement, imparts a rocking motion to the shaft e^1, and thereby produces the required motion of the slide-valve *e*.

It will be obvious to those familiar with this class of machinery that by the above-described arrangement I obtain a direct working of the slide-valve in a more simple manner than would be practicable with the ordinary arrangement of the valve and ports.

Instead of having the rocking shaft e^1 parallel with the piston-rod, as shown in Fig. 2, I may arrange the said shaft obliquely to the piston-rod—that is to say, it may extend forward from the valve in an inclined or slanting direction, and thereby bring its forward end nearer to the piston-rod, so that the said arms may be shortened, if necessary.

The feed or advance of the drill or perforating implement is effected by the following mechanism: The feed-screw *f* is arranged at the bottom or side of the cylinder *a*, and passes through a feed-nut, *g*, attached to or held by the frame A, on which the cylinder and its adjuncts slide. Parallel with the piston-rod b^1, I arrange another rocking shaft, f^1,

which has on it an arm, f^2, arranged to be actuated by the side of the aforesaid double conical piece b^2 on the piston-rod b^1, to impart to the said shaft a rocking or vibrating motion.

Near the arm f^2, I fix in the frame a stop, a^*, to limit the motion of the said arm, and keep it in the proper position to be acted on by the said conical piece, and I also place near it a spring, f^*, which tends always to keep the arm up to the stop. The shaft f^1 also has another arm, f^3, to which are pivoted two pawls, f^4 f^5, that take into the teeth of a ratchet-wheel, f^6, on the feed-screw f. The points of these pawls are formed to act upon the ratchet-wheel f^6 in opposite directions, so one pushes and the other pulls the said ratchet-wheel around, and the latter therefore has a continuous feeding or advance motion during the operation of the machine. And one result of this arrangement of the two pawls is that no separate retaining-pawl is required to prevent the backward turning of the same.

When the feed mechanism is to be operated by hand, I provide the end of the feed-screw f with a hand-lever in place of the ratchet-wheel, and I provide a sounder, as shown in Fig. 1, which acts when the machine does not feed quickly enough. This sounder consists of a small lever, k, pivoted on the cylinder-frame at k^1, and which has a spring, k^2, to bring it into contact with the conical or inclined piece b^2 on the piston-rod b^1.

At or near the front of the machine I place a small stud, l, which is struck by the sounder-lever k when the feed requires to be accelerated, and causes the lever to indicate the need of acceleration by the vibration and consequent tapping sound.

The head or cover h, at the rear end of the cylinder a, is formed with a deep cavity or recess for the reception of a ratchet-wheel, h^1, and devices for controlling the same.

Two pawls, h^2 h^3, are arranged to take into this wheel at points diametrically opposite each other, as shown in Fig. 7. These pawls are not fitted on pins or pivots, but are formed with bosses h^4, which drop into small cavities in the head, and they are kept in place by stop-pieces h^5 cast in the head. The springs h^6 of these pawls are held by small teeth formed and fitted into notches in studs h^7, fixed in the head or cover h.

By this construction and arrangement of the parts I avoid all screws and similar fastenings for securing these parts in place.

The ratchet-wheel h^1 has a square central hole, through which a rod, h^8, is passed. This rod does not project at the rear through the cylinder-cover h, but extends forward into the piston-rod b^1, which is made hollow for a portion of its length, in order that it may receive this square rod and slide to and fro over the same.

The said square rod has a head, h^9, at the back or inner side of the ratchet-wheel h^1. Its part which extends inside the piston-rod is twisted or made spiral, and the piston-rod b^1 has a steel brush or die, h^{10}, with a correspondingly-formed aperture, which fits the spiral rod.

The head or cover h has a plate, h^{11}, placed over the recess or cavity inclosing the ratchet-wheel, and which is secured to the head by bolts and nuts h^{12}, as shown in Fig. 2. The said spiral rod extends through this plate into the piston-rod b^1.

The effect of the combination of this spiral or twisted rod with the said ratchet-wheel and pawls is that during the forward stroke or motion of the piston b no rotation of the same is produced; but during the backward stroke or movement of the piston the same and the drill or perforating implement have a partial rotation on their axis a distance corresponding with the distance between the teeth of the said wheel, so that the said drill does not strike the rock or other substance twice in succession in exactly the same place.

I may form an aperture near the end of the piston-rod b^1, wherein I fit a piece termed "a die," which bears on the shank or stem of the drill.

Over the end of the piston-rod I fit a ring or collar, and at the side of the rod opposite the said die I drive a key between the said collar and rod, thereby causing the die to bind tightly on the drill shank or stem; but I prefer to use the device shown in Figs. 8 and 9, in which I fit the die or key n into a recess cut through one side of the piston-rod b^1, so that it bears on the shank of the drill c, and fit the head n' of the die in a recess in the collar o, and I secure the said die by a set-screw, q, passed through the collar o.

I provide a rock-drilling machine with means for automatically stopping the working of the same when the drill has been fed forward to the full extent of the feed-screw. For this purpose I provide the exhaust or supply pipe or passage of the cylinder a with a throttle-valve, r, which has, outside of the said pipe or passage, on its axis or rod, a lever-arm or crank, r^1, provided with double flat surfaces, and a spring, r^*, to keep the valve in either position in which it is adjusted.

This lever-arm or crank is arranged in such a position in relation to a fixed cam or projection, r^2, on the forward part of the frame A that when the drill has been fed forward to its full extent the said cam or projection will act on the lever-arm or crank r^1 in such a manner as to close the valve r, thereby cutting off the supply or stopping the escape of the steam or other actuating-fluid and stopping the working of the machine.

I claim as my invention—

1. The combination, with the slide-valve e,

of the oscillating rod e^1, operated by the piston-rod, and the arm e^3, projecting up through the exhaust-port, constructed and arranged substantially as described and shown.

2. In a rock-drilling machine, the devices for effecting the feed or advance of the drill, consisting of the conical surfaces b^2 on the piston-rod, the rocking shaft and lever f^1 f^2, the arm and pawls f^3 f^4 f^5, the ratchet-wheel f^6, feed-screw f, and nut g, constructed and combined substantially as set forth.

WILLIAM WALLACE DUNN.

Witnesses:

ROWLAND GEORGE BROWN,
8 *Southampton Buildings,*
London, England.

ARTHUR HENRY WHITE,
90 *John St., Barnsbury.*