July 22, 1969 S. H. BOLAND 3,457,454

STABILIZED LIGHT SOURCE FOR OPERATION AT SUBSTANTIALLY CONSTANT TEMPERATURE AND INTENSITY

Filed Aug. 1, 1968

Fig. 1.

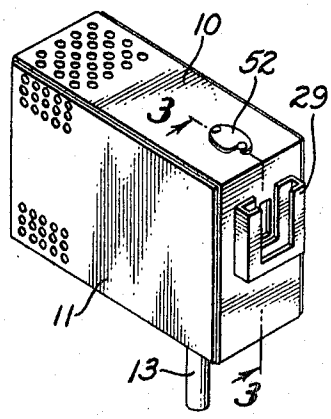

Fig. 2.

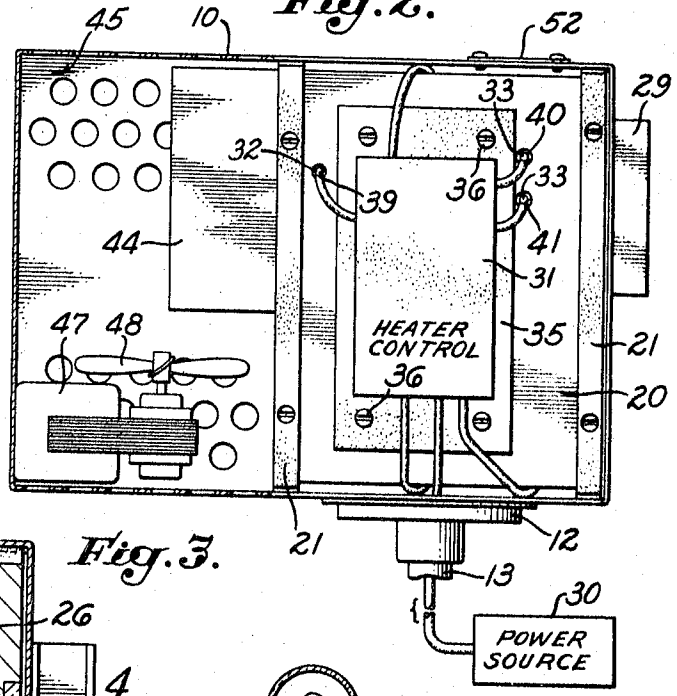

Fig. 3.

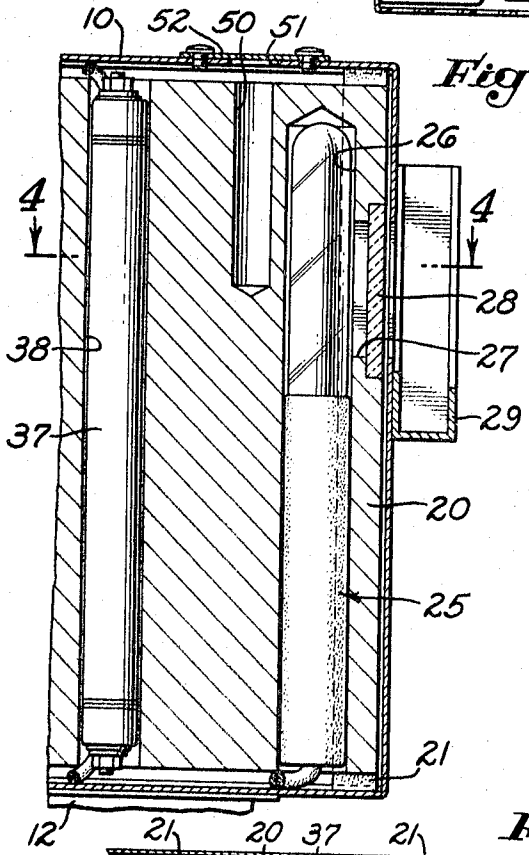

Fig. 5.

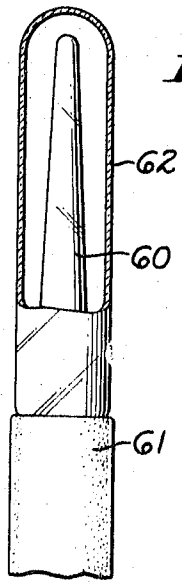

Fig. 4.

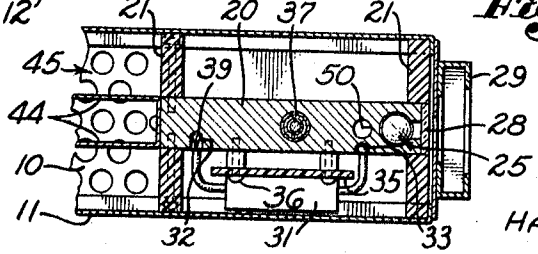

INVENTOR.
STEVEN H. BOLAND

BY HIS ATTORNEYS.
HARRIS, KIECH, RUSSELL & KERN

United States Patent Office 3,457,454 Patented July 22, 1969

3,457,454

STABILIZED LIGHT SOURCE FOR OPERATION AT SUBSTANTIALLY CONSTANT TEMPERATURE AND INTENSITY

Steven H. Boland, Temple City, Calif., assignor to Ultra-Violet Products, Inc., San Gabriel, Calif., a corporation of California

Filed Aug. 1, 1966, Ser. No. 569,424
Int. Cl. H01j 7/24, 13/52, 61/52
U.S. Cl. 315—115 6 Claims

ABSTRACT OF THE DISCLOSURE

A stable light source including a glow discharge lamp such as a mercury vapor lamp positioned within a metal block, a heater for the metal block, and a heater control for maintaining the temperature of the block intermediate the temperature of the lamp and the ambient temperature for lamp operation at a high constant temperature.

This invention relates to light sources of substantially constant intensity and, in particular, to sources utilizing glow discharge lamps, such as mercury vapor and argon lamps and the like.

It is an object of the invention to provide a light source having a higher intensity output and one of substantially constant intensity. The intensity of the emission from a lamp varies with the lamp temperature and with higher temperature lamps, more problems are encountered with lamp temperature control. At the present time it is desirable to utilize higher lamp temperatures for higher outputs and also for use with different gases and vapors in the lamp.

It is an object of the invention to provide a new and improved stabilized light source adapted for operation of the lamp at an elevated and substantially constant temperature. A further object is to provide a new and improved light source incorporating means for controlling heat losses from the structure.

It is an object of the invention to provide a stabilized light source including a lamp mounted in a metal block for heat transfer from the lamp to the block and from the block to the ambient atmosphere, with the block incorporating another heat source for maintaining the block at a substantially constant temperature.

It is a particular object of the invention to provide a stable light source for producing radiation at substantially constant intensity and including a glow discharge lamp, a metal mounting block having a lamp opening therein with the lamp positioned in the lamp opening, with the block including a light passage communicating with the lamp opening for radiation from the lamp to the exterior of the block, a heater for the block, and heater control means including temperature responsive means carried on the block, with the control means maintaining the temperature of the block adjacent the temperature responsive means substantially at a predetermined value intermediate that of the lamp and that of the ambient atmosphere. An additional object is to provide such a device wherein the mounting block also serves as a stable temperature reference for the heater control means.

It is an object of the invention to provide a lamp structure adapted for use in a stabilized light source and comprising a glow discharge lamp having a lamp body and a base and an outer sleeve disposed about and spaced from the lamp body and carried on the base providing a closed space around the lamp body.

The invention also comprises novel details of construction and novel combinations and arrangements of parts, which will more fully appear in the course of the following description. The drawing merely shows and the

description merely describes a preferred embodiment of the present invention which is given by way of illustration or example.

In the drawing:

FIG. 1 is a perspective view of a preferred form of the stable light source of the invention;

FIG. 2 is an enlarged side view of the device of FIG. 1 with a cover removed;

FIG. 3 is an enlarged partial sectional view taken along the line 3—3 of FIG. 1;

FIG. 4 is a partial sectional view taken along the line 4—4 of FIG. 3; and

FIG. 5 is an enlarged partial sectional view of a preferred form of the lamp structure of the invention.

In the preferred embodiment illustrated in the drawing, the light source is mounted in a box **10** having a removable cover **11**. A flange **12** on the bottom surface of the box provides for supporting the box on a vertical post **13**. Of course, any convenient mounting means may be utilized.

A metal mounting block **20**, typically of aluminum, is positioned within the box **10**, and preferably is supported on plastic spacer members **21** (FIG. 4) so as to have no direct contact with the box. A lamp **25** is positioned in a lamp opening **26** in the block **20** and a passage **27** provides a light path from the lamp to the exterior of the block. A window **28**, typically of quartz, may be provided at the passage **27** for the purpose of keeping atmospheric contaminants away from the lamp and for the purpose of blocking ambient air flow directly onto the lamp. A mounting bracket **29** may be provided on the exterior of the box **10** and aligned with the passage **27** for supporting filters or the like, as desired.

A heat source is provided for the mounting block **20** and is operated to maintain the temperature of the block substantially constant. The temperature setting for the block is selected to fall between the temperature of the lamp **25** and the temperature of the ambient atmosphere, with the block temperature preferably being maintained in the range of about 15 to 25° F. below that of the lamp. In a typical unit utilizing a mercury-argon lamp, the lamp temperature is about 125° F. and the block temperature in the area between the lamp and the heat source is about 105° F., with the ambient temperature being about 75° F.

Typically the heat source may be a conventional electric resistance heater utilizing a conventional control circuit for energizing the heater from a power source **30**. Various circuits for this purpose are known and none will be shown in detail herein. The control circuit **31** may be mounted on a circuit board **35** mounted on a side of the block **20** by screws **36**. The heating element **37** preferably is positioned in an opening **38** centrally located in the block **20**, providing for maximum heat transfer. The control circuit will include a temperature responsive element, typically a varistor **32**, which may be mounted in an opening **39** in the block **20**. Temperature stabilization of the control circuit may be improved by mounting any temperature sensitive elements therein, typically transistors **33**, in the block **20**, such as in openings **40**, **41**.

Forced air cooling may be incorporated in the structure, as by means of cooling fins **44** carried on the block **20** and projecting into an open air space **45** within the box **10**. Openings may be provided in the lower and upper portions of the box adjacent the fins **44**, permitting upward flow of air over the fins. Air flow will occur as a result of air heating by contact with the fins. The rate of air flow may be increased by utilizing a blower, such as a motor **47** and fan **48** positioned below the fins **44**. The use of forced air cooling makes the operation of the system independent of ambient air motion in the room in which the light is being operated.

An opening **50** may be provided in the upper surface of the block **20**, in alignment with an opening **51** in the top of the box **10**, for receiving a conventional bulb thermometer for measuring the temperature of the block. A cover plate **52** may be utilized to cover the opening **51** when the thermometer is not in use.

The light source of the invention is intended for use with any of the conventional vapor or gas discharge lamps, which are in general referred to as glow discharge lamps. A preferred form of lamp structure is illustrated in FIG. 5 and includes a glow discharge lamp which may be conventional in construction incorporating a lamp body **60** and a base **61**. The improvement to be covered herein includes the addition of an outer sleeve **62** which is disposed about and spaced from the lamp body **60**. The sleeve **62** is formed of a suitable material, such as quartz, which will not adversely affect the lamp output. The sleeve **62** is carried on the base **61** and provides a closed space about the lamp body **60**. In a typical structure, the sleeve **62** may be in the order of one-half inch diameter and the annular space about the lamp body **60** may be in the order of one-eighth inch thick and typically is filled with air.

This lamp structure provides a number of advantages. The closed air space functions as an insulator, reducing heat flow from the lamp to the surrounding block thereby permitting maintenance of a higher lamp temperature with a lower power input. Glow discharge mercury lamps often generate a considerable amount of ozone around the periphery of the lamp. The ozone layer affects the lamp radiation passing therethrough and variations in the thickness and density of the ozone layer due to air movement result in variations in intensity of the output. In the structure illustrated in FIG. 5, the space within the sleeve **62** becomes saturated with ozone, providing a nonmoving layer of ozone of fixed density and thickness, so that lamp intensity is not affected by ozone variation. Furthermore, the closed air space prevents direct air flow around the lamp **60**, thereby eliminating temperature disturbances due to air motion. The base **61** preferably is formed of a material having a low heat conductivity, typically a molded plastic.

In operation of the light source, the block **20** with its associated heater provides a control on the heat loss from the lamp itself. By maintaining the temperature of the block substantially constant, it is also possible to maintain the temperature of the lamp itself substantially constant although at a temperature greater than that of the block. The heat loss from the lamp to the block is relatively small, permitting operation of the lamp at higher temperatures with lower power input. The temperature of the block will be substantially uniform in the zone between the lamp and the heater and there will be a temperature gradient through the block between the heater and the cooling fins, but in general, the temperature at any particular point on the block is maintained substantially constant.

By way of example, a light source constructed as shown in the drawing hereof with a UVP Model 11SC–1 Pen-Ray Lamp has been operated for more than 100 hours. The block temperature was maintained constant within ±½° F. and the lamp temperature was maintained within ±0.1° F. of the set point during each operating period. The emission intensity of the lamp at 2537 A. over a seven-hour test period varied less than ±¼%.

Although an exemplary embodiment of the invention has been disclosed and discussed, it will be understood that other applications of the invention are possible and that the embodiment disclosed may be subjected to various changes, modifications and substitutions without necessarily departing from the spirit of the invention.

I claim as my invention:

1. In a stable light source for producing radiation at substantially constant intensity, the combination of:

a glow discharge lamp;

a metal mounting block having a lamp opening therein with said lamp positioned in said lamp opening,

said block including a light passage communicating with said lamp opening for permitting passage of radiation from said lamp to the exterior of said block;

a heater for said block; and

heater control means for energizing said heater from a power source, said control means including temperature responsive means carried on said block, said control means maintaining the temperature of said block adjacent said temperature responsive means substantially at a predetermined value intermediate that of said lamp and that of the ambient atmosphere.

2. A stable light source as defined in claim **1** in which said glow discharge lamp includes a lamp body and a base and an outer sleeve disposed about and spaced from said lamp body and carried on said base providing a closed space around said lamp body.

3. A stable light source as defined in claim **1** including cooling fins on said block remote from said lamp opening, with said heater and temperature responsive means positioned between said fins and said lamp opening, and means for moving atmospheric air past said fins.

4. A stable light source as defined in claim **1** in which said control means includes at least one transistor, and with said transistor and temperature responsive means mounted in said block.

5. A stable light source as defined in claim **2** in which said mounting block includes a heater opening spaced from said lamp opening, with said heater positioned in said heater opening.

6. A stabilized light source as defined in claim **1** in which said heater control means maintains the temperature of said block adjacent said temperature responsive means at a predetermined value in the range of about 15 to 25° F. less than the temperature of said lamp.

References Cited

UNITED STATES PATENTS

2,101,135	12/1937	Finch et al.	313—13 X
2,273,450	2/1942	Rentschler	313—25
2,412,907	12/1946	Pennow	315—117 X
2,721,285	10/1955	Beese	313—25
2,047,390	7/1936	Spanner	313—25 X
2,382,939	8/1945	Koch	313—25 X
3,358,167	12/1967	Shanks	313—25 X

JAMES W. LAWRENCE, Primary Examiner

C. R. CAMPBELL, Assistant Examiner

U.S. Cl X.R.

240—2, 51.11; 313—13, 15