April 20, 1965 R. A. CLAPP 3,178,999

COMPENSATING CIRCUIT FOR PHOTOGRAPHIC TIMERS

Filed Nov. 2, 1961 4 Sheets-Sheet 1

FIG. 2

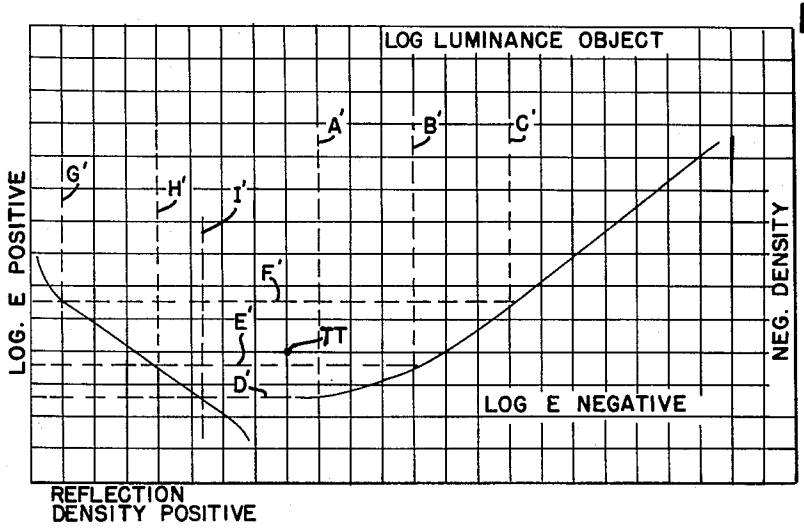


FIG. 3

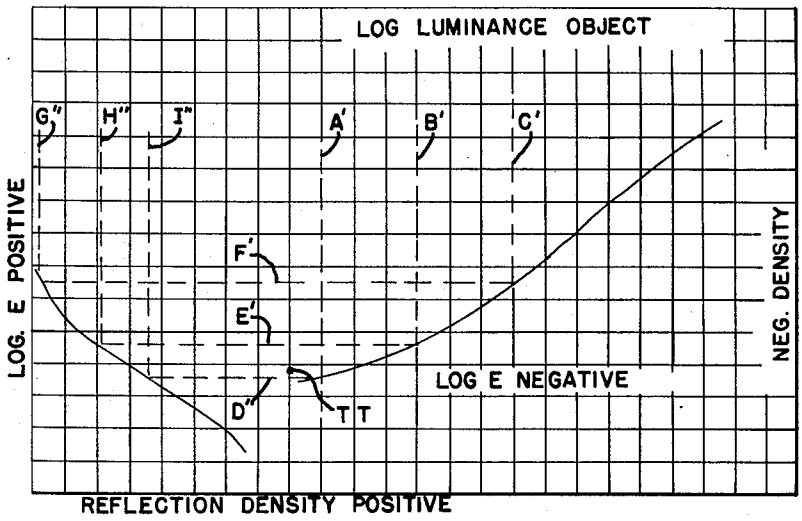


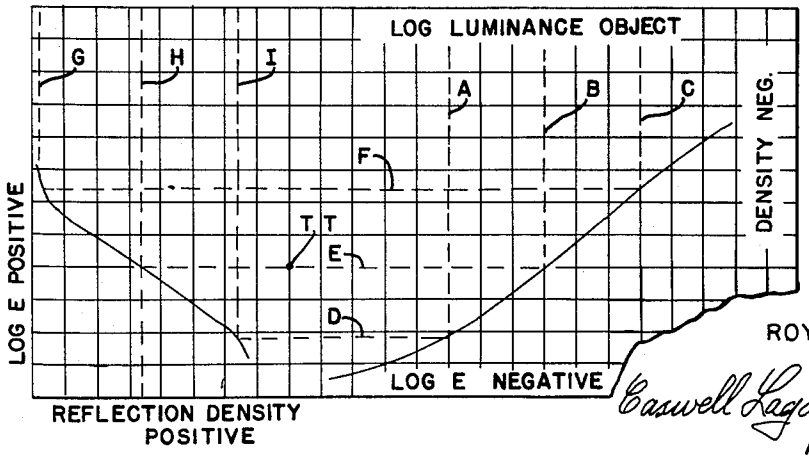


FIG. 1

INVENTOR.
ROY A. CLAPP

Caswell Lagaard & Wicks
ATTORNEYS

April 20, 1965 R. A. CLAPP 3,178,999

COMPENSATING CIRCUIT FOR PHOTOGRAPHIC TIMERS

Filed Nov. 2, 1961 4 Sheets-Sheet 2

FIG. 4

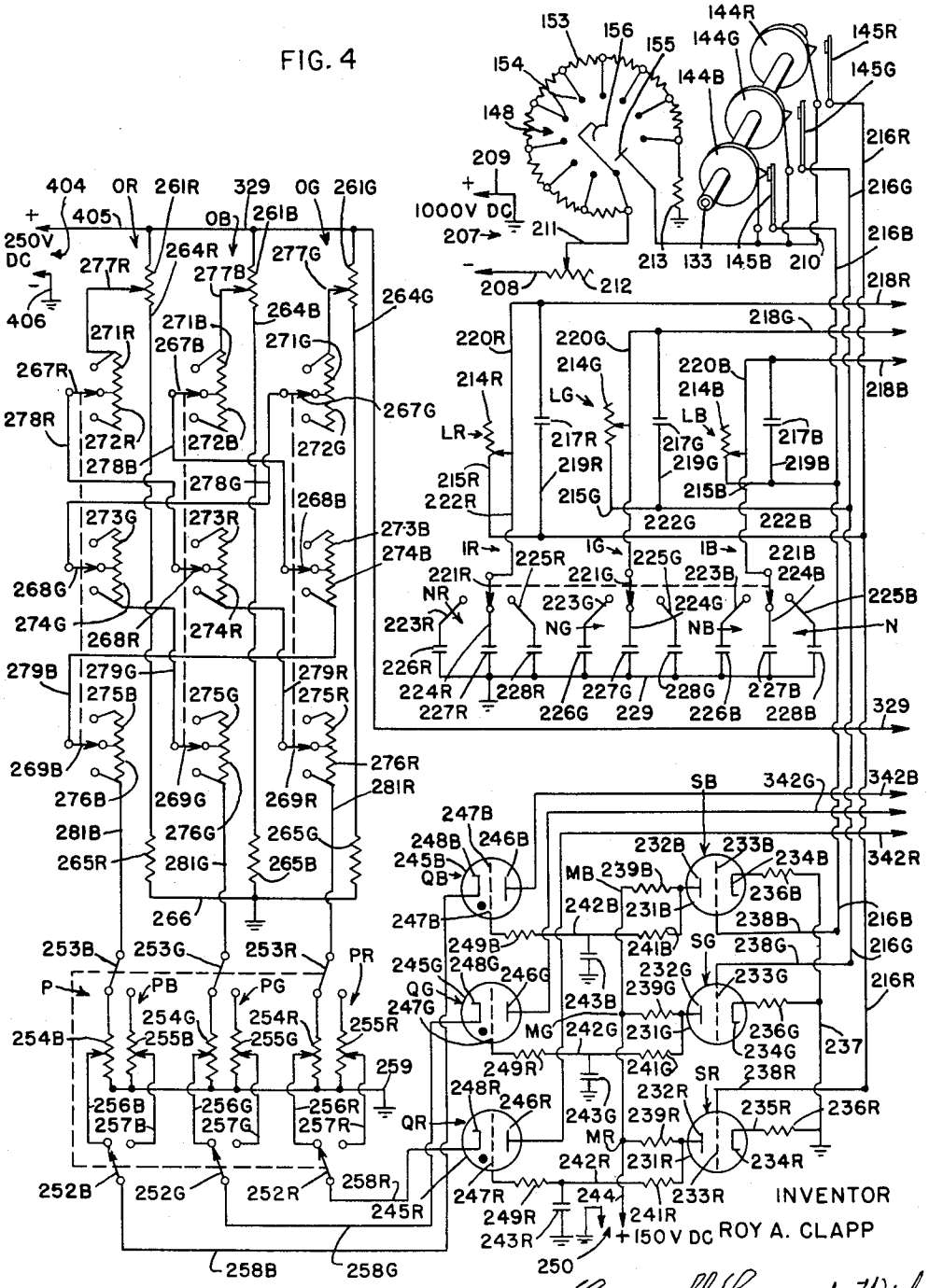


Caswell Lagaard & Wicks

ATTORNEYS

April 20, 1965 R. A. CLAPP 3,178,999

COMPENSATING CIRCUIT FOR PHOTOGRAPHIC TIMERS

Filed Nov. 2, 1961 4 Sheets-Sheet 3

FIG. 5

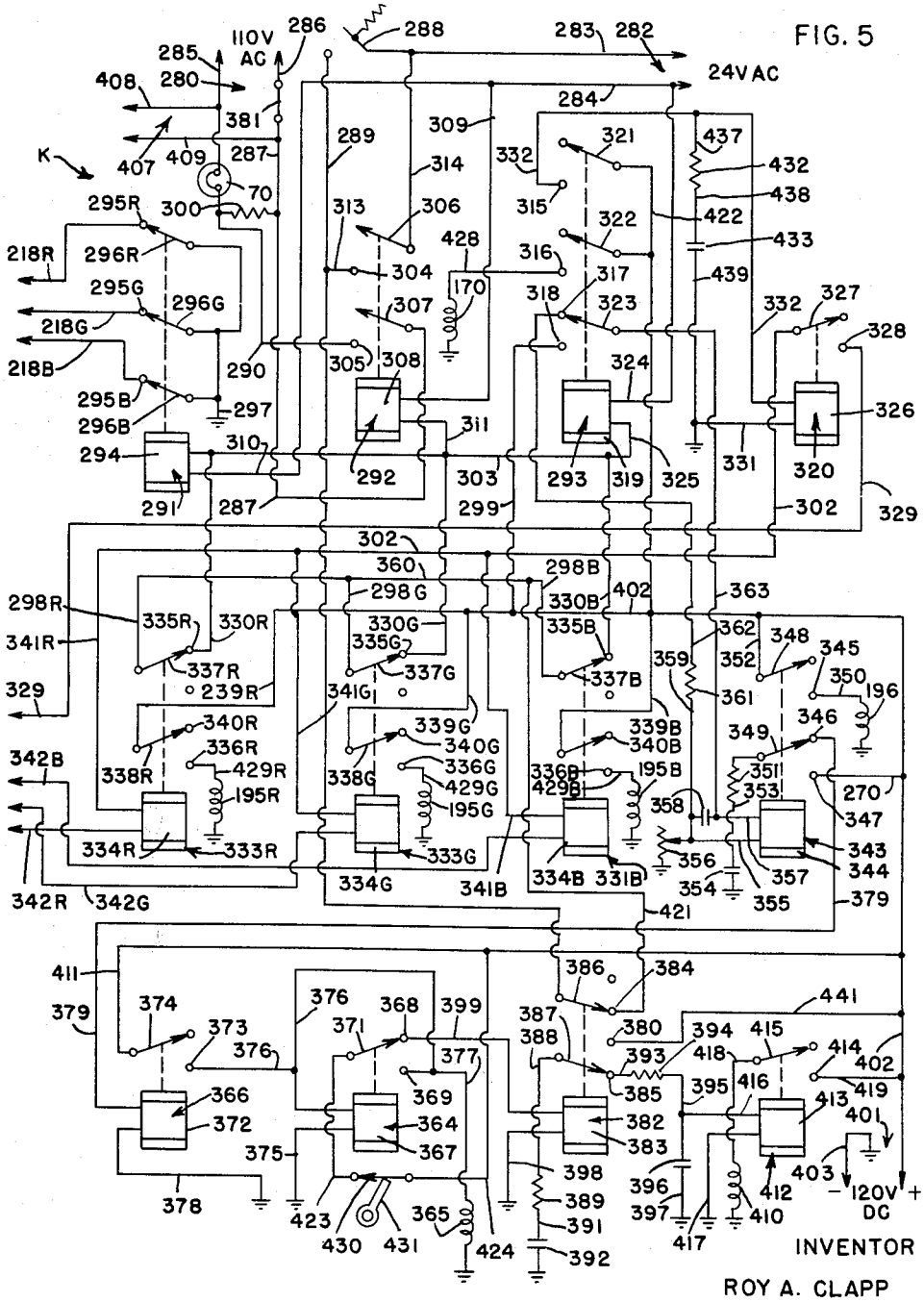


Caswell Lagaard & Wicks
ATTORNEYS

April 20, 1965 R. A. CLAPP 3,178,999

COMPENSATING CIRCUIT FOR PHOTOGRAPHIC TIMERS

Filed Nov. 2, 1961 4 Sheets-Sheet 4

FIG. 6

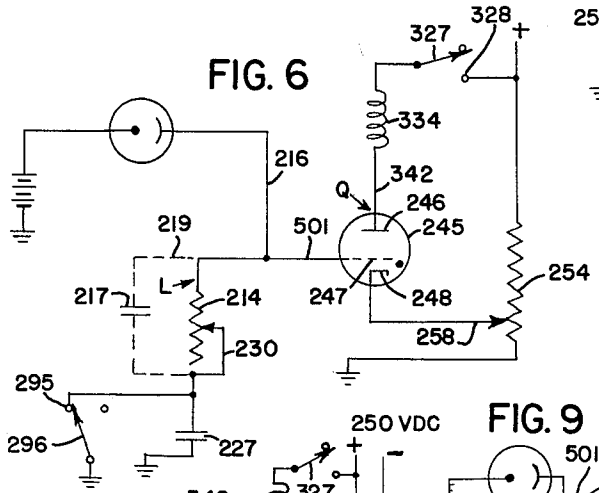


FIG. 8

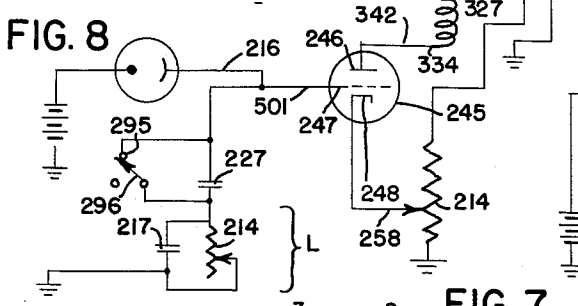


FIG. 9

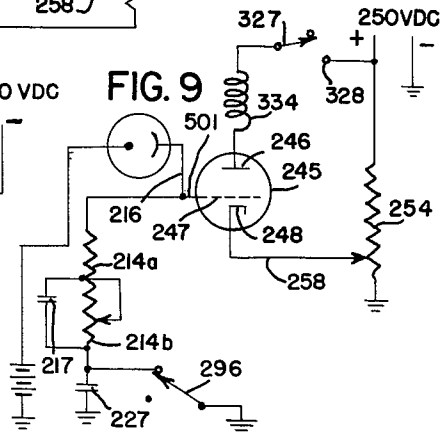


FIG. 7

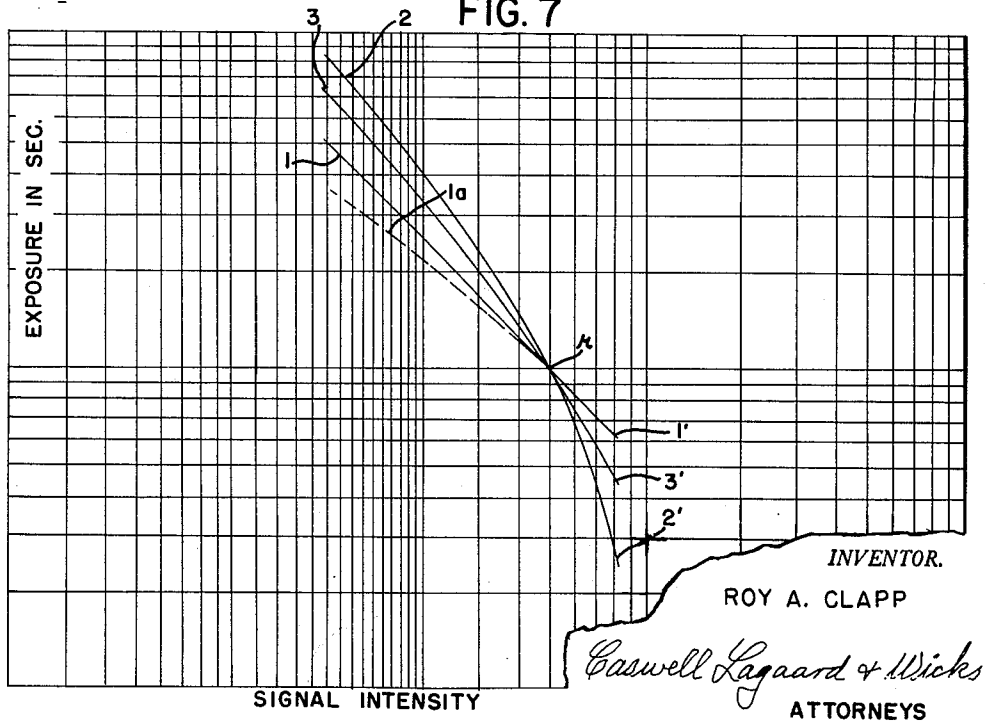


INVENTOR.
ROY A. CLAPP
Caswell Lagaard & Wicks
ATTORNEYS

United States Patent Office 3,178,999 Patented Apr. 20, 1965



# 3,178,999
# COMPENSATING CIRCUIT FOR PHOTOGRAPHIC TIMERS

Roy A. Clapp, Minneapolis, Minn., assignor to Pako Corporation, Minneapolis, Minn., a corporation of Delaware

Filed Nov. 2, 1961, Ser. No. 149,745
8 Claims. (Cl. 88—24)

This application is a continuation in part of the application of patent of Roy A. Clapp for Photographic Printer, filed January 30, 1959, Serial No. 790,226 now U.S. Patent No. 3,100,419, issued Aug. 13, 1963.

This invention relates to photographic timers in which the time is controlled by the action of a photo-electric cell signal.

An object of the present invention is to provide a photo cell controlled timer having an extended range suitable for use in printing negatives which include both very dense and very thin negatives.

A further object is to provide a timer suitable for printing upon materials having non-linear sensitivity characteristics.

Another object is to provide a timer suitable for printing negatives which are in themselves non-linear records of the original subject matter.

Another object of this invention is to provide a timer for color printing in which the timing balance of the color emulsions can be maintained even when the sensitometric curves differ from each other for each of the color components.

A still further object of the invention is to provide a timer which is inexpensive, simple and reliable in operation yet flexible in adjustment so that changes can easily be made for different kinds of material without the requirement of skilled technical knowledge on the part of the operator.

The invention will be best understood from the following description when read in connection with the accompanying drawings in which,

FIG. 1 is a combined graph of negative and positive material arranged to show the tone reproduction when both materials are properly exposed.

FIG. 2 is a combined graph showing the tone reproduction which results from the printing of an under-exposed negative by the usual photo-electric cell controlled timer.

FIG. 3 is a combined graph illustrating the improvement in tone reproduction which is secured through the use of the invention.

FIG. 4 is a drawing of a schematic circuit of a complete color timer embodying the present invention and corresponding to FIG. 12 in the parent case.

FIG. 5 is a drawing of a schematic circuit of the programming and relay circuit used in conjunction with the preceding circuit corresponding to FIG. 13 in the parent case.

FIG. 6 is a drawing of a schematic circuit of part of a black and white timer embodying the present invention.

FIG. 7 is a graph of time of exposure vs. signal intensity.

FIG. 8 is a drawing of an alternate arrangement of components operating in the same manner as the circuit shown in FIG. 6.

FIG. 9 is a drawing of another version of the invention.

In reviewing the disclosures contained in the parent application on this invention it is found, that while the structure is clearly disclosed and described, the theory of operation is inadequate and therefore substantially greater detail will now be presented in order to make the function and operation of this invention clear.



It is old in the art to control printing exposure by arranging a photoelectric cell to sample the printing light after transmission through the negative being printed and using this photo-electric cell signal current to charge a capacitor. Since the rate of charge is proportional to the intensity of the printing light and likewise, printing time is assumed to be proportional to such intensity, this serves as a usual means for controlling exposure time.

This has been particularly unsatisfactory, since with badly over or under-exposed negatives the best print requires an exposure which is not inversely proportional to the light intensity. In such cases the operator must modify the automatic timing cycle to overcome the deficiencies of this system. While these deficiencies are undesirable in black and white photography, they are even more serious in color photography where several emulsion layers are involved and the characteristics of these layers are different from one another. It is suggested that reciprocity failure is the cause of this problem and several solutions have been proposed to modify the exposure time in accordance with the Schwarzchild exponent. Such devices have been complex and subject to frequent maladjustment and malfunction. Further, it has been found that correction according to Schwarzchild exponent is inadequate in itself.

There are many factors, some known and others unknown, which lead to "remakes" in printing with automatic controls. Two will be mentioned which, as far as known, have not been previously pointed out.

First, while theoretically a timer of the type described should operate in a strictly linear fashion, this is actually not true in practice. Referring to FIG. 7 the abscissa of this graph is the photo-electric cell signal, assumed to be exactly proportional to the printing light intensity after passing through the negative. The ordinates are corresponding exposure times. This graph is drawn on a log-log scale. Curve 1–1′ represents a prefect inverse proportion of light versus time. Actually, however, a practical timer tends to behave generally in accord with the curve 1*a*–1′. The exact form of this curve is dependent on many variables concerned with the design and fabrication of the timer itself. But, in many cases, the timer will fire-out eventually with no photo-electric cell signal at all. The causes include energy emitted from the grid of the tube connected to the capacitor tending to charge said capacitor, thermal-junction currents, absorption of the dielectric of the capacitor, etc. These combine to much more than offset the leakage loss of the capacitor. Consequently, it is desirable to provide compensation for such a timer when used for printing dense negatives where the signal is extremely small and the printing time is a long one.

On the other hand, an under-exposed negative (numerically more common) is also benefitted by compensation for reasons which will now be explained with the aid of FIGS. 1–3. These graphs have been constructed generally in accordance with the method of Jones for the graphic solution of objective tone reproduction, which is discussed in Chapter 23, and particularly on page 913 et seq., revised edition (1954), "The Theory of the Photographic Process." On the right side of each of these figures a curve corresponding approximately to the sensitometric characteristics of the negative material is drawn, at the left side of the figures is a curve corresponding approximately to the sensitometric properties of the positive material.

Referring to FIG. 1, across the top of the first block is a scale corresponding to the logarithm of the luminance of various portions of the object and it is considered for this example that the range of these luminances extends from A to C in which A corresponds to the area which has the least luminance and C corresponds to the area of

the object having the greatest luminance. A third line B corresponds to the geometric mean luminance of this range. These luminances correspond to the logarithm of exposure scale for the negative which appears on the scale under the negative curve. After development, the negative areas which received exposure corresponding to A, yield a density denoted as D. Areas which receive exposure corresponding to B, yield a density denoted as E, while areas which receive exposure corresponding to C, yield a density corresponding to F. The horizontal dotted lines D, E, and F are extended to the left until they intersect the sensitometric curve of the positive material in the second block. Since the density of the negative area determines the exposure of the corresponding areas of the positive, it will be clear that the densities, D, E, and F correspond to the log. of exposure of the positive material and when processed the positive material yields reflection densities corresponding to I, H and G. Tracing the dotted line C in the first block to its point of intersection, thence along the horizontal line F, to the intersection in the second block, and finally to the vertical line G, we see that the areas of highest luminance in the object are reproduced as the lowest reflection density in the positive material, or as nearly white paper. Correspondingly, by tracing the area of least luminance A in the first block, across by dotted line D to its intersection and vertical dotted line I, we find that the darkest parts of the object are reproduced as the densest areas of the positive so that the appearance of the original subject is reproduced in the print.

In the case of a correctly exposed negative and print the range of exposure is so placed on the negative curve that it is contained within the portion of the sensitometric curve that is substantially a straight line. It can also be seen that the mean luminance corresponds to the mean density of the positive material so that B is exactly mid-way between A and C in the first block and the corresponding area of the print H is mid-way between G and I in the second block. In printing such a negative the photo-electric cell timer is set up so that its target center is mid-way between the extreme densities of the negative D and F and this timer target is denoted by a circled point labelled TT. The normal position of the target center is such that it exposes the mean density of a negative to produce a print density approximately centered on the sensitometric curve of the positive material. Consequently in FIGS. 1 and 2, it appears mid-way between the upper and lower limits of negative density and opposite to the center of the curve of the positive material. Thereafter different negatives which are properly exposed are printed in accordance with the foregoing description.

In FIG. 2, an under-exposed negative of the same subject is shown where the luminance of the object now occupies the positions A', B', and C', and consequently intersect the sensitometric curve further down on the curved portion so that the luminance A' is translated into the density D', luminance B' results in the density E' and the luminance C' results in the density F'. Comparing these with the previous example it will be noted that the total range of densities in the properly exposed negative consists of 23 units, whereas in the under-exposed negative there is a difference in density of only 14½ units. Further, the mean luminance of the properly exposed negative results in a mean density of E, which is very near the center of the density range, whereas it will be seen that E' is much closer to D' than it is to F' in FIG. 2. The timer target setting denoted by the circled point in FIG. 2 is still half-way between the densities F' and D so that the print is automatically exposed in accordance with FIG. 2 so that the reflection density G' which corresponds to the positive exposure is no longer nearly white. Thus, the highlight areas of the print are reproduced as much too dark. Further, the middle tone H' is much closer to the darkest part of the picture represented by I' so that the fact that both the middle tone and the highlights are printed darker than the original object results in an unpleasant reproduction.



FIG. 3 shows an improved way of printing such an under-developed negative in which the present invention serves to automatically alter the target center adjustment whenever an under-exposed negative is encountered. This has the effect of reducing the exposure of the positive material so that the density F' is printed lighter with a reflection density of G'', which is the same as that of the normal negative in FIG. 1. At the same time H'' is shifted more nearly mid-way between G'' and I,'' resulting in a print which is much improved and generally more acceptable in quality.

This invention secures these results in a very simple way.

For the purpose of illustrating an application of the invention to a particular timer, the circuitry shown in FIGS. 4 and 5 is employed. This circuitry is suitable for use in color printing and employs three timers IR, IG and IB. These circuits being similar but used for different colors, only the timer IR will be described in detail, it being understood that the same reference characters to which the suffixes G and B instead of R will be used to designate the corresponding parts. However structure not directly associated with the instant invention will not be described reference to the parent case for such data being referred to and forming a part of the instant disclosure as if the same were described herein.

*The Timers*

The timer IR includes a compensating circuit LR, a trigger circuit QR, an interpolating circuit MR, a density modifying circuit NR, a color modifying circuit OR and a light compensating circuit PR. These circuits will now be described in detail.

One element of each of the switches **145R**, **145G** and **145B** operating the color filters of the printer are connected to a common conductor **210** which in turn is connected to the anode **155** of a tube **148**. Tube **148** is energized by a power line **207** which is connected to a source of direct current of approximately 1000 volts. This line comprises a conductor **208** which is connected to the negative side of the power source and a conductor **209** which is connected to the positive side and which is grounded. The cathodes **156** of this tube is connected to one end of a voltage divider **153** and to a conductor **211**. This conductor in turn is connected to a variable resistor **212** which in turn is connected to the conductor **208**. The other end of the voltage divider **153** is connected to a resistor **213** which is grounded.

*The compensating circuits*

The compensating circuit LR includes a variable resistor **214R** which is connected to a conductor **215R** and which in turn is connected to another conductor **216R**. This latter conductor is connected to the other element of the switch **145R**. A condenser **217R** is connected to the conductor **215R** by means of a conductor **219R** and to another conductor **218R** which in turn is connected to the programming section K of the invention as described in the parent case. The movable member of the resistor **214R** is connected by means of a conductor **220R** to the conductor **213R**.

*The density modifying circuits*

The density modifying circuit NR includes a single pole three-position switch **221R**, the movable contact of which is connected by means of a conductor **222R** to the conductor **220R**. The fixed contacts of this switch are connected by means of conductors **223R**, **224R**, and **225R**, to three condensers **226R**, **227R**, and **228R**. These condensers are all connected to a common conductor **229** which is grounded. All of the switches **221R**, **221G** and **221B** are ganged and operate in unison.

*The buffer circuits*

The buffer circuit SR includes a tube **231R** which may

be a triode and which has a plate 232R, a grid 233R and a cathode 234R. The cathode 234R is connected by means of a conductor 235R to a resistor 236R and which is connected to a grounded conductor 237. The grid 233R of this tube is connected by means of a conductor 238R to the conductor 216R.

*The interpolating circuits*

The interpolating circuit MR includes two fixed resistors 239R and 241R which are both connected at one end to the plate 232R of tube 231R. The resistor 241R is connected by means of a conductor 242R to a condenser 243R which in turn is grounded. The resistor 239R is connected by means of a conductor 244 to the positive side of a line 250 connected to a source of direct current of about 150 volts.

*The trigger circuits*

The trigger circuit QR comprises a gas filled thyratron tube 245R having a plate 246R, a grid 247R and a cathode 248R. A grid resistor 249R is connected to the conductor 242R and to condenser 243R and also to the grid 247R. The plate 246R is connected by means of a conductor 342R to the programming circuitry of FIG. 5 and by means of which the termination of the timing for the particular color is procured.

*The light compensating circuits*

The light compensating circuit PR is used for selectively printing prints from negatives exposed either by flash illumination or outdoor illumination and comprises two two-position single pole manually controlled switches 252R and 253R operating in conjunction with two potentiometers 254R and 255R. One of the fixed contacts of switch 252R is connected to the movable contact of potentiometer 254R by means of a conductor 256R. The other fixed contact of switch 252R is connected by means of a conductor 257R to the movable contact of potentiometer 255R. The movable contact of switch 252R is connected by means of a conductor 258R to the cathode 248R of tube 245R. One end of the resistor of potentiometer 254R is connected to one of the fixed contacts of switch 253R while the corresponding end of the resistor of potentiometer 255R is connected to the other fixed contact of switch 253R. The other ends of the resistors of potentiometers 254R and 255R are connected to a common conductor 259 which is grounded.

*The color modifying circuits*

The color modifying circuits OR, OG, and OB permit of varying the intensity of any particular color without changing the overall density of the print. Power for operating these circuits is derived from a power line 404 connected to a source of direct current of about 250 volts. This line comprises a conductor 405 which is connected to the positive side of the source of power and a conductor 406 which is connected to the negative side and which is grounded. The circuits OR, OG and OB include potentiometers 261R, 261B and 261G. One end of each of these potentiometers is connected to a conductor 329 which in turn is connected to the positive side 405 of the line 404. The other ends of these potentiometers are connected through conductor 264R, 264B and 264G to resistors 265B, 265R and 265G. These resistors are all grounded through a conductor 266. The circuits utilize three single pole three-position switches for each color designated by the numerals 267R, 267B, 267G, 268R, 268B, 268G, 269B, 269G and 269R. The switches 267R, 268G and 269B are ganged and moved in unison. Similarly, the switches 267B, 268R and 269G are ganged and also the switches 267G, 268B and 269R are ganged. The switches 267R, 268R and 269R have connected to the fixed contacts of the same resistors 271R, 272R, 273R, 274R, 275R and 276R. Similar resistors are connected to the other switches. The resistor 271R is connected through a conductor 277R to the movable contact of the potentiometer 261R. The movable contact of the switch 267R is connected by a conductor 278R to the movable contact of switch 268R. The resistor 274R is connected by a conductor 279R to the movable contact of the switch 269R. The resistor 276R is connected by a conductor 281R to the movable contact of the switch 253R. When any of the three gangs of switches are moved from one position to another to increase or decrease the resistance in one of the color circuits, the resistance in each of the other color circuits is decreased or increased by an amount equal to one-half of the increase or decrease in the denoted circuit, thus maintaining the density the same.

In FIG. 6, the same numerals denote the same parts as in FIGS. 4 and 5, however, the letters R, G, and B have been dropped since this structure is for use with black and white photography, and it is considered that this timer is to be operated with a steady state D.C. signal.

The circuit shown in FIG. 6 includes a trigger circuit Q comprising a thermionic tube 245, having a plate 246, a cathode 248 and a grid 247. The plate 246 is connected to a relay coil 334 by a conductor 342. The relay coil 334 is connected to a switch 327 having a contact 328 connected to the positive terminal of a D.C. power supply. The cathode 248 of said tube is connected by a conductor 258 to an adjustable voltage divider 254 arranged between the positive lead of the same D.C. power supply and ground, thus providing an adjustable bias potential for said tube. The photo-electric cell signal current is applied via a conductor 216 through an adjustable compensating resistor 214 and a conductor 230 to a summing condenser 227, the other terminal of which is grounded. A normally closed pair of contacts, 295 and 296 maintain the summing condenser in a shorted condition via conductors 218 and 297. A shaping condenser 217 shunts the compensating resistor 214. For purposes of explanation the connection is shown as a dotted conductor 219. The compensation circuit comprises said resistance 214 and condenser 217 and a conductor 501 connects said resistor to the grid 247 of the tube 245.

To best understand the action of the invention, let us assume for the moment that the shaping condenser 217 is omitted from the circuit. Values will now be assigned to the components so that the operation of the circuit may better be understood. Assume the capacity of the summing condenser 227 to be one microfarad. The normal bias to fire the trigger tube may be varied by means of potentiometer 254. The signal from the photo cell is understood to range between one and eight microamperes depending upon the negative. The value of the compensation resistor is also variable between zero and one megohm. In order to show the action mathematically we will assume the timer to be theoretically linear. From examination of the schematic FIG. 6, it is clear that after the switch points 295 and 296 are opened the photo-cell signal current flowing through compensating resistance 214 will cause a voltage to appear across it of a magnitude determined by Ohm's Law. Further, the same current will be charging the summing condenser 227 so that an additional potential appears across this condenser at a rate proportional to the magnitude of the signal and with the passage of time. It is further clear that these two voltages are added together and applied to the grid 247 of the tube 245. In other words, the trigger circuit will fire when $ER+EC$ is equal to EB, where ER is the voltage developed across the compensating resistor 214 and EC is the voltage developed by the charging of the condenser 227 and EB is the firing voltage of the trigger circuit. Since, in the present case, the value of this condenser is one microfarad, it follows that the time in seconds is equal to

$$\frac{EB-ER}{I}$$

where I is the photo cell signal. Using the above information a table can now be constructed for three sets of conditions, selected arbitrarily.

| Signal μa. | A Resistor value, 0 ohms bias 5 volts | | | B Resistor value, 1 megohm bias 10 volts | | | C Resistor value, 0.5 megohm bias 7.5 volts | | |
|---|---|---|---|---|---|---|---|---|---|
| | ER | EC | Time | ER | EC | Time | ER | EC | Time |
| 1 | 0 | 5 | 5 | 1 | 9 | 9 | 0.5 | 7 | 7 |
| 2 | 0 | 5 | 2.5 | 2 | 8 | 4 | 1 | 6.5 | 3.25 |
| 4 | 0 | 5 | 1.25 | 4 | 6 | 1.5 | 2 | 5.5 | 1.375 |
| 5 | 0 | 5 | 1.0 | 5 | 5 | 1.0 | 2.5 | 5 | 1.0 |
| 8 | 0 | 5 | 0.625 | 8 | 2 | 0.25 | 4 | 3.5 | 0.437 |
| | Curve 1—1′ | | | Curve 2—2′ | | | Curve 3—3′ | | |

FIG. 7 is procured by plotting the data from the three tables as shown in FIG. 7 using log-log scale. Column A shows the timer without a resistor in series with the condenser 227 resulting in a straight line 1–1′ and simply represents the ideal timer without compensation. The data of column B is plotted to form curve 2–2′ while the curve 3–3′ represents the data of column C. It should now be clear that by varying R and the bias voltage, a wide variety of curves can be generated and while the values tabulated cause these curves to cross at point *r*, this can be easily altered if desired by a suitable choice of values for the bias voltage and the resistor. However, assume that a curve is desired to run from 2 to *r* as shown, but without having the curve drop as abruptly beyond point *r* as it does under the conditions of column B. By shunting resistor 214 with the shaping condenser 217 by connecting it with conductor 219 shown dotted in FIG. 6, an R-C network is formed so that the voltage across resistor 214 can no longer rise instantly in response to the photo-electric cell signal; instead it now increases exponentially until *ERC+EC* equals *EB* where ERC is the instantaneous potential across the R-C network. Under the new arrangement both ERC and EC, individually change with time, ERC varies exponentially to rapidly approach a limit, while EC varies linearly with time. For example, by using a 0.2 microfarad condenser 217 connected across the resistor 214 as shown by the dotted lines in FIG. 6, it will be found that while the portion of the curve between 2 and *r* remains substantially unchanged for small signals, the curve to the right of *r* follows closely *r*–3′. In practice, by simply selecting the value of the two elements 217 and 214 together with appropriate alteration of the firing bias, the timing curve can be modified to suit any of the present photographic materials. However, it is not necessary to be restricted to ordinary linear resistance, we can use a variety of combinations, linear resistance and non-linear resistances such as thyrite or crystal diodes, etc.

It is equally possible to insert the compensation circuit between the summing capacitor and ground as shown in FIG. 8. In this version the compensation circuit L, comprised of the resistor 214 and the shaping condenser 217, is in series with the summing condenser 227 which is normally maintained in a discharged condition by being shorted by closed points 295 and 296. When initiated, said points open and the photo cell signal is received via conductor 216. The combined voltage across the summing condenser 227 and resistor 214 is applied via conductor 501 to grid 247 of trigger circuit 245, the grid 248 being biased via conductor 258 and the plate 246 being connected to associated equipment by conductor 342.

A further variation of this invention is shown in FIG. 9 in which the compensation circuit is composed of two resistors 214*a* and 214*b* arranged in series with each other and in series with summing condenser 227, resistor 214*b* being shunted with a shaping condenser 217.

Networks of these kinds with one or more condensers give practically a free choice to the curves developed.



Thus, it can be seen that the curve to the left of *r* can not only be used to correct for the natural drop of the real timer at 1*a*, but can also over-compensate for this end of the curve, while a different compensation of the curve to the right of *r* can shift the printing for under-exposed negatives in the toe of the print materials as was previously describe. All this is accomplished by a few inexpensive parts of great reliability.

So far this invention has been described as it is related to a black and white printer, having a single timing channel, but it is obvious this can be readily used in exactly the same way in a color printer, which has three separate timing channels and that the component values might be varied between the individual channels so as to conform to the nature of photographic materials. A suitable circuit for use in a color printer is shown in FIGS. 4 and 5.

It is equally true that while the conditions which have been used to describe the action of this invention have been confined to a steady state photo-electric signal, that by suitable choices of values it may be also used with a timer which employs pulse signals, in which case the shaping condenser serves a second purpose by reducing the height of the transient voltages developed during the receipt of the pulse itself.

Changes in the specific form of the invention, as herein described, may be made within the scope of what is claimed without departing from the spirit of the invention.

Having described the invention, what is claimed as new and desired to be protected by Letters Patent is:

1. In exposure control apparatus for use in photographic printing, a summing condenser, light sensitive means connected to said summing condenser and activated in accordance with printing intensity, said light sensitive means providing a signal current, initiating the exposure and controlling the rate of charge of said summing condenser, a compensating resistor in series with said condenser, the voltage across which being dependent upon the signal current, a shaping condenser shunting said resistor and forming therewith an R-C network, and exposure terminating means energized by the combined voltage of the summing condenser, shaping condenser and the resistor and operating when the combined voltage reaches a predetermined value to terminate the exposure.

2. In exposure control apparatus for use in photographic printing, a summing condenser, a photo electric cell connected to said condenser and activated in accordance with the printing intensity, said photo electric cell providing a current, initiating the exposure and controlling the rate of charge of said condenser, a resistor connected in series with said condenser, the voltage across which depending solely upon the signal current, and exposure terminating means energized by the combined voltage of the summing condenser and the resistor and operating when the combined voltage reaches a predetermined value to terminate the exposure.

3. In exposure control apparatus for use in photographic printing, a summing condenser, light sensitive means connected to said summing condenser and activated in accordance with printing intensity, said light sensitive means providing a signal current, initiating the exposure and controlling the rate of charge of said summing condenser, compensating means including two resistors connected in series with one another and with said summing condenser, the voltage across which being dependent solely upon the signal current, a shaping condenser connected across said one of said resistors and exposure terminating means energized by the combined voltage of the summing condenser and the resistor and operating when the combined voltage reaches a predetermined value to terminate the exposure.

4. In exposure control apparatus for use in photographic printing, a summing condenser, light sensitive

means connected to said summing condenser and activated in accordance with printing intensity, said light sensitive means providing a signal current, initiating the exposure and controlling the rate of charge of said summing condenser, a non-linear resistive element in series with said condenser, the voltage across which being dependent solely upon the signal current and exposure terminating means energized by the combined voltage of the summing condenser and the resistive element and operating when the combined voltage reaches a predetermined value to terminate the exposure.

5. In exposure control apparatus for use in photographic printing, a summing condenser, light sensitive means connected to said summing condenser and activated in accordance with printing intensity, said light sensitive means providing a signal current, initiating the exposure and controlling the rate of charge of said summing condenser, compensating means including a plurality of resistors connected in series with one another and with said summing condenser, the voltage across said resistors being dependent solely upon the signal current, certain of said resistors being shunted by said shaping condenser means and exposure terminating means energized by the combined voltage across the summing condenser and the resistors and operating when the combined voltage reaches a predetermined value to terminate the exposure.

6. In exposure control apparatus for use in photographic printing, a summing condenser, light sensitive means connected to said summing condenser and activating in accordance with printing intensity, said light sensitive means providing a signal current, initiating the exposure and controlling the rate of charge of said summing condenser, compensating means including a plurality of timing networks connected in series with one another and with said summing condenser, the voltage across which being dependent solely upon the signal current, and exposure terminating means energized by the combined voltage of the summing condenser and the timing networks and operating when the combined voltage reaches a predetermined value to terminate the exposure.

7. In exposure control apparatus for use in photographic printing, an electron discharge device having a grid and an anode, a photo-multiplier having an output element and activated in accordance with printing intensity, means for applying a voltage to said photo-multiplier, an output circuit connected to the output element of the photo-multiplier and having a timing branch circuit connected to ground and a grid branch circuit connected to the grid of said electron discharge device, a summing condenser in said timing branch circuit adapted to be charged by the photo-multiplier, a variable resistor in said timing circuit in series with said condenser and subject only to the current produced by said photo-multiplier and a discharge circuit having a switch therein and paralleling said condenser.

8. In exposure control apparatus for use in photographic printing, an electron discharge device having a grid and an anode, a photo-multiplier having an output element and activated in accordance with printing intensity, means for applying a voltage to said photo-multiplier, an output circuit connected to the output element of the photo-multiplier and having a timing branch circuit connected to ground and a grid branch circuit connected to the grid of said electron discharge device, a summing condenser in said timing branch circuit adapted to be charged by the photo-multiplier, a variable resistor in said timing circuit in series with said condenser and subject only to the current produced by said photo-multiplier, said resistor being adjustable to one megohm and a discharge circuit having a switch therein and paralleling said condenser.

**References Cited by the Examiner**

UNITED STATES PATENTS

| | | | |
|---|---|---|---|
| 2,158,903 | 5/39 | Knobel | 88—24 |
| 2,561,535 | 7/51 | Paulet et al. | 88—24 |
| 2,605,447 | 7/52 | Troup | 88—24 |
| 2,607,266 | 8/52 | Rabinowitz | 88—24 |
| 2,611,809 | 9/52 | Lee | 88—24 X |
| 2,952,780 | 9/60 | Rogers | 88—24 X |
| 3,056,332 | 10/62 | Beregowitz | 88—24 |
| 3,076,378 | 2/63 | Biedermann et al. | 88—24 |


NORTON ANSHER, *Primary Examiner.*

EMIL G. ANDERSON, *Examiner.*