(19) Europäisches Patentamt
European Patent Office
Office européen des brevets

(11) EP 0 987 410 B1

(12) **EUROPEAN PATENT SPECIFICATION**

(45) Date of publication and mention of the grant of the patent:
05.03.2003 Bulletin 2003/10

(51) Int Cl.[7]: **F01P 3/02**, F01P 11/04, F02B 75/22

(21) Application number: **99118210.6**

(22) Date of filing: **13.09.1999**

(54) **Cooling device for v-type internal combustion engine**

Kühlungsvorrichtung für eine V-Typ Brennkraftmaschine

Dispositif de refroidisssement pour un moteur à combustion interne en V

(84) Designated Contracting States:
DE FR IT

(30) Priority: **14.09.1998 JP 26069798**

(43) Date of publication of application:
22.03.2000 Bulletin 2000/12

(73) Proprietor: **HONDA GIKEN KOGYO KABUSHIKI KAISHA**
Minato-ku Tokyo (JP)

(72) Inventors:
- **Kanbe, Takashi**
  4-1, Chuo 1-chome, Wako-shi, Saitama (JP)
- **Nomura, Akifumi**
  4-1, Chuo 1-chome, Wako-shi, Saitama (JP)

(74) Representative: **Liska, Horst, Dr.-Ing. et al**
Weickmann & Weickmann
Patentanwälte
Postfach 86 08 20
81635 München (DE)

(56) References cited:
EP-A- 0 420 067

- **PATENT ABSTRACTS OF JAPAN vol. 010, no. 257 (M-513), 3 September 1986 (1986-09-03) -& JP 61 083450 A (SUZUKI MOTOR CO LTD), 28 April 1986 (1986-04-28)**
- **PATENT ABSTRACTS OF JAPAN vol. 1998, no. 06, 30 April 1998 (1998-04-30) -& JP 10 047057 A (HONDA MOTOR CO LTD), 17 February 1998 (1998-02-17)**

Note: Within nine months from the publication of the mention of the grant of the European patent, any person may give notice to the European Patent Office of opposition to the European patent granted. Notice of opposition shall be filed in a written reasoned statement. It shall not be deemed to have been filed until the opposition fee has been paid. (Art. 99(1) European Patent Convention).

EP 0 987 410 B1

Description

Technical Field to which the Invention Pertains

[0001] The present invention relates to a cooling device for a V-type internal combustion engine, in which a water jacket is formed on each of first and second banks of the V-type internal combustion engine.

Prior Art

[0002] The cooling device for a V-type internal combustion engine of this type has been disclosed, for example, in Japanese Patent Laid-open No. Sho 58-96121, in which two discharge pipes are provided to a water pump; two upstream water pipes individually communicated to lower portions of water jackets of first and second banks are connected to these discharge pipes; and two downstream water pipes individually connected to upper portions of the water jackets of the first and second banks are connected to one common water pipe connected to an inlet of a radiator.

Problem to be Solved by the Invention

[0003] With the above prior art configuration, since the two upstream water pipes and two downstream water pipes must be extended relatively longer, they become conspicuous as seen from outside, to degrade the appearance characteristic of the engine.

[0004] JP-A-61083450 discloses a cooling device for a V-type internal combustion engine according to the preamble of claim 1. According to this document an inlet leading to a water jacket and an inlet end of a through hole piercing through a cylinder block longitudinally both are opened to a setting seat of one cylinder of a V-type engine. The inlet leading to the water jacket and the inlet end of the through hole are thereby both connected to an inlet chamber which is connected to a discharge port of a water pump, while an outlet end of the through hole is connected to a water jacket of the other cylinder. However, the above prior art configuration has the disadvantage of being difficult to manufacture.

[0005] It is an object of the present invention to provide a simplified cooling device for a V-type internal combustion engine, which is capable of sequentially supplying cooling water having been discharged from a water pump to water jackets of first and second banks and to a radiator by way of relatively inconspicuous water pipes. This object is achieved by the features of claim 1.

[0006] According to the invention, one part of cooling water having been discharged from the water pump is first supplied to the water jacket of the first bank and then the other part of cooling water is supplied to the water jacket of the second bank through the lower communication water pipe; the one part of cooling water having been used for cooling the first bank flows to the combined chamber of the second bank through the upper communication water pipe and is combined with the other part of cooling water having been used for cooling the second bank; and the cooling water thus combined flows to the radiator. Accordingly, it is possible to uniformly supply cooling water to the water jackets of the first and second banks.

[0007] Further, since the upper and lower communication water pipes are sufficient to be relatively short and are disposed in the valley portion between both the banks, they are hidden by both the banks and are inconspicuous as seen from the outside, that is, they do not degrade the appearance of the internal combustion engine.

[0008] Furthermore, according to the invention, a thermostat for opening/closing an outlet of the combined chamber is disposed in the combined chamber, and an outlet joint of the combined chamber is communicated to an inlet of a radiator.

[0009] Since the thermostat is disposed in the combined chamber in which components of cooling water having been used for cooling the first and second banks are combined, it can suitably control the water temperature in both the banks by certainly detecting an average water temperature in both the banks. Further, it is not required to make a layout of piping for the thermostat, thereby simplifying the entire piping layout.

[0010] According to a second feature of the present invention, in addition to the first feature, the first and second banks are disposed fore and aft when the internal combustion engine is mounted on a motorcycle; the outlet joint of the combined chamber is provided on an upper front surface of the second bank in such a manner as to project therefrom; and the outlet joint is communicated via a water pipe to the inlet of the radiator disposed in front of the internal combustion engine.

[0011] According to the second feature, it is possible to reduce the degree of bending of the water pipe for communicating the combined chamber to the radiator, and hence to make small the flow resistance of the water pipe and also improve the appearance of the engine.

[0012] According to the third feature of the present invention, in addition to the first or the second feature, an upper joint connected to the upper communication water pipe is connected to the second bank; a bypass outlet joint having a diameter smaller than that of the upper joint and communicated to the combined chamber is integrally formed to the upper joint; and a bypass water pipe communicated to a suction pipe of the water pump is connected to the bypass outlet joint.

[0013] According to the third feature described above, since the upper joint connected to the second bank is integrated with the bypass outlet joint, it is possible to simplify the piping works.

[0014] According to the fourth feature of the present invention, in addition to the third feature, heating chambers for carburetor of the both banks are interposed in the bypass water pipe.

[0015] According to the fourth feature described above, it is possible to prevent icing of the carburetors of both the banks by cooling water passing through the bypass water path.

Effect of the Invention

[0016] According to the first feature of the present invention, a discharge pipe of a water pump is communicated to the water jacket of the first bank; a lower portion of the water jacket of the first bank is communicated to a lower portion of the water jacket of the second bank via a lower communication water pipe; an upper portion of the water jacket of the first bank is communicated via an upper communication water pipe to a combined chamber which is formed in the second bank and connected to an upper portion of the water jacket of the second bank; and the lower and upper communication water pipes are disposed in a valley portion between the both banks. Accordingly, it is possible to uniformly supply cooling water to the first and second banks by using the relatively simple water pipes and hence to desirably cool both the banks. Also since the upper and lower communication water pipes are sufficient to be relatively short and are disposed in the valley portion between both the banks, they are hidden by both the banks and are inconspicuous as seen from the outside, that is, they do not degrade the appearance of the internal combustion engine.

[0017] Furthermore, since the thermostat is disposed in the combined chamber in which components of cooling water having been used for cooling the first and second banks are combined, it can suitably control the water temperature in both the banks by certainly detecting an average water temperature in both the banks. Further, it is not required to make a layout of piping for the thermostat, thereby simplifying the entire piping layout.

[0018] According to the second feature of the present invention, the first and second banks are disposed fore and aft when the internal combustion engine is mounted on a motorcycle; the outlet joint of the combined chamber is provided on an upper front surface of the second bank in such a manner as to project therefrom; and the outlet joint is communicated via a water pipe to the inlet of the radiator disposed in front of the internal combustion engine. Accordingly, it is possible to reduce the degree of bending of the water pipe for communicating the combined chamber to the radiator, and hence to make the flow resistance of the water pipe small and also improve the appearance of the engine.

[0019] According to the third feature of the present invention, an upper joint connected to the upper communication water pipe is connected to the second bank; a bypass outlet joint having a diameter smaller than that of the upper joint and communicated to the combined chamber is integrally formed to the upper joint; and a bypass water pipe communicated to a suction pipe of the water pump is connected to the bypass outlet joint. Accordingly, since the upper joint connected to the second bank is integrated with the bypass outlet joint, it is possible to simplify the piping works.

[0020] According to the fourth feature of the present invention, since heating chambers for carburetor of the both banks are interposed in the bypass water pipe, it is possible to prevent icing of the carburetors of both the banks by cooling water passing through the bypass water path.

Mode for Carrying out the Invention

[0021] Hereinafter, an embodiment of the present invention will be described with reference to the accompanying drawings.

Brief Description of the Drawings

[0022] It is illustrated in:

Fig. 1
A side view of a motorcycle on which a V-type internal combustion engine of the present invention is mounted.
Fig. 2
A side view of the internal combustion engine shown in Fig. 1.
Fig. 3
An enlarged vertical sectional view taken on line 3-3 of Fig. 2.
Fig. 4
A sectional view taken on line 4-4 of Fig. 3.
Fig. 5
A sectional view taken on line 5-5 of Fig. 2.
Fig. 6
A system diagram showing the flow of cooling water in the internal combustion engine.
Fig. 7
A sectional view taken on line 7-7 of Fig. 2.
Fig. 8
An enlarged view showing front and rear timing transmission units shown in Fig. 3 and their neighborhoods.
Fig. 9
An enlarged view of a transmission shown in Fig. 3 and its neighborhood.
Fig. 10
A plan view showing an exhaust system of the internal combustion engine and its neighborhood.
Fig. 11
A plan view of a cylinder head of a rear bank of the internal combustion engine.
Fig. 12
A view seen along an arrow 12 of Fig. 9.

[0023] In the following description, the front, rear, right, and left sides are based on a body of the motorcycle.

Entire Configuration of Motorcycle (see Figs. 1 and 2)

[0024] A front fork (not shown in Figs. 1 and 2) for supporting a front wheel is steerably connected to the front end of a body frame 1 of a motorcycle M. A rear fork 3 for supporting a rear wheel 2 is vertically swingably connected to a rear portion of the body frame 1, and a rear cushion 7 is interposed between the rear ends of the rear fork 3 and the body frame 1.

[0025] A V-type internal combustion engine E having a front bank 4_1 and a rear band 4_2 is mounted on an intermediate portion of the body frame 1, and a fuel tank 5 is mounted on the intermediate portion of the body frame 1 at a position over the engine E. A main seat 6a and a pillion seat 6b are mounted on the rear portion of the body frame 1 in such a manner as to be continuous to the rear end of the fuel tank 5.

[0026] A chain transmission unit 10 for connecting an output shaft 97 of a transmission 8 connected to the internal combustion engine E and a hub of the rear wheel 2 is disposed on the left side of the rear wheel 2. A starting motor 11 is disposed in front of and under the crank shaft 15.

[0027] A front carburetor 12_1 connected to the front bank 4_1 and a rear carburetor 12_2 connected to the rear bank 4_2 are disposed in a valley portion 28 between the front bank 4_1 and the rear bank 4_2 of the internal combustion engine E. A front exhaust pipe 13_1 connected to a front surface portion of the front bank 4_1 and a rear exhaust pipe 13_2 connected to a rear portion of the rear bank 4_2 are collectively connected to the front end of a common exhaust muffler 14. The exhaust muffler 14 is disposed opposite to the chain transmission unit 10 with respect to the rear wheel 2, that is, on the right side of the rear wheel 2.

Entire Configuration of Internal Combustion Engine (see Figs. 2, 3, 5 and 8)

[0028] The front bank 4_1 and the rear bank 4_2 of the internal combustion engine E are disposed fore and aft in such a manner as to cross each other at 90° centered at a crank shaft 15 extending from right to left. The crank shaft 15 has a single crank portion 16 having a crank pin 16a, and a pair of right and left journals 18 and 17 adjacent to both the ends of the crank shaft 15. The journals 18 and 17 are supported by a crank case 21 via ball bearings 20 and 19, respectively.

[0029] The front bank 4_1 and the rear bank 4_2 include cylinder blocks 22_1 and 22_2 connected to the front and rear sloping surfaces of a cone-shaped upper portion of the crank case 21 supporting the crank shaft 15, and cylinder heads 23_1 and 23_2 connected to upper ends of the cylinder blocks 22_1 and 22_2, respectively. Water jackets 24_1 and 24_2, which are continuous to each other, are formed in the cylinder blocks 22_1 and 22_2 and cylinder heads 23_1 and 23_2, respectively.

[0030] Pistons 26_1 and 26_2 inserted in cylinder bores 25_1 and 25_2 of the cylinder blocks 22_1 and 22_2 are connected to the crank pin 16a via connecting rods 27_1 and 27_2, respectively. In this case, the connecting rod 27_2 of the rear bank 4_2 is connected to the crank pin 16a in such a manner as to be offset leftwardly from the connecting rod 27_1 of the front bank 4_1. The axial line of the rear bank 4_2 is offset leftwardly from that of the front bank 4_1 in accordance with a lateral offset S, as shown in Fig. 8, between the connecting rods 27_1 and 27_2.

[0031] As shown in Fig. 5, an over-running clutch 53 of a starting transmission unit 94, and a drive gear 54a of a first transmission unit 54 connected to a clutch 100 are mounted to a right end portion, projecting outwardly from the right journal 18, of the crank shaft 15 in such a manner as to be adjacently positioned in this order from the inside of the right end portion of the crank shaft 15. Specifically, an outer member of the over-running clutch 53 is spline-connected to the crank shaft 15, and a starting gear 52 is fixed to an inner member of the over-running clutch 53. The drive gear 54a is key-connected to the crank shaft 15.

[0032] As shown in Fig. 8, a drive timing sprocket 42_1 of a front timing transmission unit 46_1 for driving a valve system cam shaft 41_1 of the front bank 4_1, a drive timing sprocket 42_2 of a rear timing transmission unit 46_2 for driving a valve system cam shaft 41_2 of the rear bank 4_2, and a rotor 31 of a generator 30 are mounted on a left end portion, projecting outwardly from the left journal 17, of the crank shaft 15 in such a manner as to be adjacently positioned in this order from the inside of the left end portion of the crank shaft 15. Specifically, the rotor 31 is key-connected to the crank shaft 15. The mounting structure of the two drive timing sprockets 42_1 and 42_2 will be described later.

[0033] A stator 32 of the generator 30, which is surrounded by the rotor 31, is fixed to a left cover 33 connected to the left end surface of the crank case 21.

[0034] A projection 35 is formed at a portion on the outer peripheral surface of the rotor 31. A crank position sensor 36 for detecting a rotational position of the crank shaft 15 in cooperation with the projection 35 is fixed to the left end surface of the crank case 21. An output signal sent from the crank position sensor 36 is used as a control signal for an ignitor or an input signal for a tachometer.

[0035] At the right end portion, opposed to the generator 30, of the crank shaft 15, the starting gear 52 is supported thereon via the over-running clutch 53 in such a manner as to be adjacent to the right journal 18, and the first drive gear 54a is key-connected thereto in such a manner as to be adjacent to the starting gear 52.

[0036] With this configuration, the front and rear timing transmission units 46_1 and 46_2 can be collectively assembled on the same side, that is, on the left end portion side of the crank shaft 15, to thereby improve the assembling performance thereof, and also the maintenance of both the timing transmission units 46_1 and 46_2 can be easily performed without any interference with

other parts only by removing the generator 30 positioned outside both the timing transmission units 46_1 and 46_2 from the crank shaft 15. Further, since the generator 30 is disposed adjacent to both the timing transmission units 46_1 and 46_2, oil scattered from both the timing transmission units 46_1 and 46_2 are splashed to the generator 30 during operation of the engine, it is possible to effectively cool the generator 30.

[0037] Further, according to the above configuration, the front and rear timing transmission units 46_1 and 46_2 and the generator 30 are disposed on the left side portion of the crank case 21 while a starting transmission unit 94, the first transmission unit 54, and the clutch 100 are disposed on the other side of the crank case 21, so that good balance in weight is maintained between both sides of the crank case 21 and accordingly, when the internal combustion engine is mounted on the body frame 1, it is possible to easily offer good balance in weight between the right and left sides of the motorcycle M.

Valve System (see Figs. 2, 3, 4, 8, and 9)

[0038] Intake valves 37_1 and 37_2 and exhaust valves 38_1 and 38_2 are respectively provided in the cylinder heads 23_1 and 23_2 of the front and rear banks 4_1 and 4_2 in such a manner that the intake valves 37_1 and 37_2 are offset to the valley 28 side between the front and rear banks 4_1 and 4_2. Both ends of cam shafts 41_1 and 41_2 extending in parallel to the crank shaft 15 are supported by the cylinder heads 23_1 and 23_2 via ball bearings 50 and 50', respectively. The cam shaft 41_1 is adapted to open/close the intake valve 37_1 and the exhaust valve 38_1 via rocker arms 39_1 and 40_1, respectively, and the cam shaft 41_2 is adapted to open/close the intake valve 37_2 and the exhaust valve 38_2 via rocker arms 39_2 and 40_2, respectively. Timing chains 44_1 and 44_2 are wound around the drive timing sprockets 42_1 and 42_2 fixed to the left end portion of the crank shaft 15 and driven timing sprockets 43_1 and 43_2 fixed to the left ends of the cam shafts 41_1 and 41_2 of the front and rear banks 4_1 and 4_2, respectively. Both the drive timing sprockets 42_1 and 42_2 have a common boss 45 press-fitted around a portion, adjacent to the outer end of the left journal 17, of the crank shaft 15.

[0039] The drive timing sprockets 42_1, the timing chain 44_1 and the driven timing sprocket 43_1 of the front bank 4_1 constitute the front timing transmission unit 46_1 for reducing the rotational speed of the crank shaft 15 to half and transmitting the reduced rotational speed to the corresponding cam shaft 41_1. The front timing transmission unit 46_1 is disposed in a front timing transmission chamber 47_1 formed in a side wall, on the generator 30 side, of the front bank 4_1. The drive timing sprockets 42_2, the timing chain 44_2 and the driven timing sprocket 43_2 of the rear bank 4_2 constitute the rear timing transmission unit 46_2 for reducing the rotational speed of the crank shaft 15 to half and transmitting the reduced rotational speed to the corresponding cam shaft 41_2. The rear timing transmission unit 46_2 is disposed in a rear timing transmission chamber 47_2 formed in a side wall, on the generator 30 side, of the rear bank 4_2.

[0040] The rear timing transmission unit 46_2 is disposed outside the front timing transmission unit 46_1 in the axial direction, that is, it is located closer to the generator 30 than the front timing transmission unit 46_1 is.

[0041] The crank shaft 15 is rotated counterclockwise as shown by an arrow R in Fig. 4, and accordingly, the rear sides of the timing chains 44_1 and 44_2 are loosened. To give specific tensions to the loosened rear sides of the timing chains 44_1 and 44_2, arched chain tensioners 48_1 and 48_2 swingably supported by the crank case 21 are brought into slide-contact with the loosened rear sides of the timing chains 44_1 and 44_2. Further, known tensioner lifters 49_1 and 49_2 for pressing central portions of the chain tensioners 48_1 and 48_2 in the longitudinal direction toward the timing chains 44_1 and 44_2 at specific loads are mounted on mounting planes formed on rear surfaces of the cylinder blocks 22_1 and 22_2 of the front and rear banks 4_1 and 4_2 with bolts 109, respectively.

[0042] The crank case 21 is divided at the central portion in the lateral direction into a right case half 21b and a left case half 21a. Outer races of the ball bearings 20 and 19 are previously lightly press-fitted in the right and left case halves 21b and 21a, respectively, and upon assembly of both the case halves 21b and 21a, the right and left journals 18 and 17 of the crank shaft 15 are lightly press-fitted in inner races of the ball bearings 20 and 19, respectively. Here, in order to allow the drive timing sprockets 42_1 and 42_2 whose common boss 45 is press-fitted around the crank shaft 15 at the position adjacent to the outer side of the left journal 17 to pass through the inner race of the left ball bearing 19, an outside diameter d_1 of each of the drive timing sprockets 42_1 and 42_2 is set to be slightly smaller than an inside diameter d_2 of the inner race of the ball bearing 19. As a result, it is possible to easily press-fit the common boss 45 of both the drive timing sprockets 42_1 and 42_2 around the crank shaft 15 as a single part. Further, since the ball bearings 20 and 19 are lightly press-fitted in the right and left case halves 21b and 21a and the right and left crank journals 18 and 17, it is possible to suppress occurrence of vibration of the ball bearings 20 and 19 and hence reduce occurrence of noise during operation of the engine.

Exhaust System (see Figs. 2, 10 and 11)

[0043] The exit of an exhaust port 51_1 of the front bank 4_1 is opened to the front of the cylinder head 23_1 of the front bank 4_1, and the upstream end of the front exhaust pipe 13_1 is connected to the exit of the exhaust port 51_1. The exit of an exhaust port 51_2 of the rear bank 4_2 is opened to a right side surface, opposed to the rear timing transmission unit 46_2, of the rear portion of the cyl-

inder head 23_2 of the rear bank 4_2, and the upstream end of the rear exhaust pipe 13_2 is connected to the exit of the exhaust port 51_2.

[0044] The front and rear exhaust pipe 13_1 and 13_2 arranged on the upper and lower sides extend on the right side, opposed to the front and rear chain transmission units 46_1 and 46_2, of the internal combustion engine E, and the downstream ends of the front and rear exhaust pipe 13_1 and 13_2 are collected and connected to the exhaust muffler 14 disposed on the right side of the rear wheel 2.

[0045] With this configuration, since the front and rear timing transmission units 46_1 and 46_2 are collectively disposed on one side, to which the rear bank 4_2 is offset from the front bank 4_1, of the internal combustion engine E, and the front and rear exhaust pipes 13_1 and 13_2 arranged on the upper and lower sides are collectively located on the other side of the internal combustion engine E, it is possible to make the entire width of the internal combustion engine E including both the exhaust pipes 13_1 and 13_2 as narrow as possible while easily preventing interference between both the. timing transmission units 46_1 and 46_2 and both the exhaust pipes 13_1 and 13_2.

[0046] Further, according to the above configuration, since the rear exhaust pipe 13_2 disposed on the right side of the motorcycle M is connected to the exhaust port 51_2 opened to the right side surface of the rear portion of the cylinder head 23_2 of the rear bank 4_2, the degree of bending of the rear exhaust pipe 13_2 is reduced, so that it may make small the flow resistance of the pipe and hence to improve the output performance.

Transmission System (see Figs. 2, 3 and 9)

[0047] A transmission case portion 95 protruded from a lower portion of the rear bank 4_2 is formed integrally with the crank case 21. An input shaft 96 and an output shaft 97 of the transmission 8, which are provided directly behind the crank shaft 15 in such a manner as to be located on the front and rear sides in parallel to the crank shaft 15, are contained in the transmissioncase portion 95. Both ends of the input shaft 96 are supported by right and left walls of the transmission case portion 95 via a pair of ball bearings 98' and 98, and both ends of the output shaft 97 are supported by the right and left walls of the transmission case portion 95 via a pair of ball bearings 99' and 99. An inner member 101 of the clutch 100 covered with the right cover 34 connected to the right side surface of the crank case 21 is spline-connected to the right end portion of the input portion 96. A first driven gear 54b, which is meshed with the first drive gear 54a to constitute the first transmission unit 54, is mounted to the inner end of the outer member 102. A plurality (five in the example shown in the figures) of speed change gear trains G_1 to G_5 are selectively arranged between the input shaft 96 and the output shaft 97.

[0048] As shown in Fig. 9, a left wall 95a, which supports the left end portions of the input shaft 96 and the output shaft 97, of the transmission case portion 95 is offset rightwardly from the timing transmission unit 46_2 of the rear bank 4_2. Accordingly, when the tensioner lifter 49_2 of the timing transmission unit 46_2 of the rear bank 4_2 is mounted on the rear surface of the cylinder block 22_2 of the rear bank 4_2, it is possible to prevent the tensioner lifter 49_2 from interfering with the transmission case portion 95.

[0049] In particular, since the timing transmission unit 46_2 of the rear bank 4_2 is disposed outwardly, that is, leftwardly from the timing transmission unit 46_1 of the front bank 4_1, it is possible to minimize the rightward offset of the mission case portion 95 from the crank case 21, and hence to realize the compactness of the internal combustion engine E.

Vehicular Speed Sensor (see Figs. 2, 9 and 12)

[0050] The rear wall of thetransmissioncase portion 95 has a mounting hole 103, and a vehicular speed sensor 105 having a detecting portion 105a inserted in the transmission case portion 95 through the mounting hole 103 is fixed on the rear wall of the transmission case portion 95 with a bolt 110. The vehicular speed sensor 105 is disposed with the detecting portion 105a facing to the tips of a top driven gear, that is, a driven gear 104 of the top gear train G_5.

[0051] The top driven gear 104, which is spline-connected to the output shaft 97, serves as a shift gear for working the second-speed gear train G_2 by leftward shift thereof. In this embodiment, even when the top driven gear 104 is shifted leftwardly, the outer periphery of the top driven gear 104 is not deviated from the detecting region of the vehicular speed sensor 105. The vehicular speed sensor 105 creates a signal corresponding to the number of teeth of the top driven gear 104 just crossing the detecting portion of the vehicular speed sensor 105 and outputs the signal to a computer (not shown). The computer calculates a vehicular speed on the basis of the signal thus inputted from the vehicular speed sensor 105 and displays the vehicular speed on a speed meter (not shown) on an instrument panel (not shown) of the motorcycle M.

[0052] In this way, the vehicular speed sensor 105 for detecting the rotational speed of the top driven gear 104 usually rotated together with the output shaft 97 can be mounted on the rear wall of the transmission case portion 95 without any interference with not only the rear bank 4_2 tilted rearwardly toward the transmission case portion 95 side but also the rear exhaust pipe 13_2 mounted on the rear portion of the rear bank 4_2.

[0053] A rib 106 for covering the lower surface of the vehicular speed sensor 105 is integrally formed on the rear surface of the transmission case portion 95. The central portion of the rib 106 has a through-hole 107 allowing a lead wire 108 of the vehicular speed sensor

105 to pass therethrough.

[0054] As shown in Fig. 2, a pair of right and left hangers 112_1 and a pair of right and left hangers 112_2 are integrally formed on the upper and lower sides of the rear surface of the transmission case portion 95 in such a manner as to project therefrom, and a pair of right and left hangers 112_3 are integrally formed on the front surface of the crank case 21 in such a manner as to project therefrom. When the internal combustion engine E is mounted on the body frame 1, these hangers 112_1, 112_2, and 112_3 are connected to the body frame 1. Then, the vehicular speed sensor 105 is disposed in a rear dead space of the interior of the transmission case portion 95 surrounded by the rear side two pairs of the hangers 112_1 and 112_2. With this configuration, it is possible to enhance the space efficiency.

[0055] The above rib 106 functions to protect the vehicular speed sensor 105 from being affected by small stones and sands flying from a road during running of the motorcycle M. The through-hole 107 for allowing the lead wire 108 to pass therethrough functions as a port for discharging rainwater and cleaning water permeated in the rib 106.

Lubricating and Cooling System (see Figs. 2, 3, 5 and 6)

[0056] As shown in Figs. 2, 3 and 5, the first drive gear 54a key-connected to the right end portion of the crank shaft 15 is meshed at its two different portions in the peripheral direction with a pump drive gear 56 and the first driven gear 54b.

[0057] The pump drive gear 56 is key-connected to a pump shaft 61 which is supported via a bearing 86 by the right cover 34 connected to the right end surface of the crank case 21. The pump shaft 61, which is in parallel to the crank shaft 15, is disposed in front of and over the crank shaft 15.

[0058] An inner rotor 58 of a trochoid type oil pump 57 for lubrication is fixed on the inner end of the pump shaft 61, and an impeller 63 of a water pump. 62 for cooling is fixed on the outer end of the pump shaft 61. A pump housing 60 for containing an outer rotor 59 of the oil pump 57 is screwed in a partition wall 65 for supporting the ball bearing 20 of the crank case 21. A pump casing 64 for containing the impeller 63 is fixed on the outer surface of the right cover with a bolt 87. In this way, the oil pump 57 and the water pump 62 are coaxially disposed in front of and over the crank shaft 15. The oil pump 57 is provided on the crank case 21 in such a manner as to be adjacent to the outer side of the over-running clutch 53 in the radial direction.

[0059] A suction port of the oil pump 57 is connected via a suction pipe 68 to a strainer 67 (see Fig. 2) disposed in an oil sump 66 on the inner bottom of the crank case 21, and a discharge port of the oil pump 57 is communicated via an oil passage 69 to the crank shaft 15, the cam shafts 41_1 and 41_2 of the front and rear banks 4_1 and 4_2, and other portions to be lubricated.

[0060] An oil filter 70 positioned substantially directly over the crank shaft 15 is interposed in the course of the oil passage 69. The oil filter 70 is mounted to a filter chamber 71 formed in the right cover 34, and a cap 72 for closing an opening of the chamber 71 is fixed to the right cover 34. An inlet chamber 71a on the outer peripheral side of the oil filter 70 in the filter chamber 71 is communicated to the discharge port of the oil pump 57 via an upstream portion 69a of the oil passage 69 formed in the crank case 21, and an outlet chamber 71b on the inner peripheral side of the oil filter 70 in the filter chamber 71 is communicated to two branch oil passages 69b and 69c, formed in the cap 72, of the oil passage 69. One branch oil passage 69b is communicated to a portion 73 to be lubricated of the crank shaft 15 system. The other branch oil passage 69c is further branched at a connection surface between the crank case 21 and the right cover 34 into front and rear branch oil passages 69d and 69e which are in turn communicated to portions 74_1 and 74_2 to be lubricated of the valve systems including the cam shafts 41_1 and 41_2 of the front and rear banks 4_1 and 4_2.

[0061] When the oil pump 57 is driven by the rotation of the crank shaft 15 via the pump drive gear 56 and the pump shaft 61, oil accumulated in the oil sump 66 is sucked from the strainer 67 and is press-fed to the filter chamber 71. The oil is filtered in the oil filter 70 and is then supplied to the portion 73 to be lubricated of the crank shaft 15 system and the portions 74_1 and 74_2 to be lubricated of the valve systems of the front and rear banks 4_1 and 4_2, to thus lubricate these portions 73, 74_1 and 74_2. Further, with the above-described arrangement and configuration of the oil pump 57, the filter chamber 71, the oil filter 70 and the oil passage 69, it is possible to make the length of the oil passage 69 as short as possible, and also to arrange the lubricating systems for the front and rear banks 4_1 and 4_2 substantially symmetrically each other and hence to uniformly lubricate both the banks 4_1 and 4_2.

[0062] The oil filter 70 is provided with a relief valve 70b for short-circuiting the inlet chamber 71a to the outlet chamber 71b when a filter element 70a of the oil filter 70 becomes blocked.

[0063] In the water pump 62, as shown in Fig. 6, a suction pipe 75 is connected to an outlet of the radiator 29 (disposed in front of the internal combustion engine E as shown in Fig. 1) via a water pipe 77_1, and a discharge pipe 76 is connected to a lower portion of the water jacket 24_1 of the front bank 4_1 via a water pipe 77_2.

[0064] As described above, the front and rear banks 4_1 and 4_2 include the cylinder blocks 22_1 and 22_2, the cylinder heads 23_1 and 23_2, and the water jacket 24_1 and 24_2 continuous to each other, respectively, and a combined chamber 80 opened to the front surface of the cylinder head 23_2 of the rear bank 4_2 is formed in the cylinder head 23_2 and an upper portion of the water jacket 24_2 is communicated to the combined chamber 80.

[0065] Lower joints 78_1 and 78_2 communicated to

lower portions of the corresponding water jackets 24_1 and 24_2 are integrally formed on the opposed surfaces of the front and rear banks 4_1 and 4_2 in such a manner as to project therefrom. Both ends of a lower communication water pipe 77_3 disposed in the valley portion 28 are connected to these joints 78_1 and 78_2.

[0066] An upper joint 79_1 communicated to an upper portion of the jacket 23_1 is integrally formed on the rear surface of the front bank 4_1, and a flange of an upper joint 79_2 communicated to the combined chamber 80 is screwed in a lower surface portion of the cylinder head 23_2 of the rear bank 4_2. Both ends of a rear communication water pipe 77_4 disposed in the valley portion 28 are connected to these upper joints 79_1 and 79_2.

[0067] A thermostat 82 is disposed in the combined chamber 80, and a thermostat cover 81 for holding the thermostat 82 and covering the opening of the combined chamber 80 is connected to the front surface of the cylinder head 23_2.

[0068] An outlet joint 83 connected to the outlet of the thermostat 82 is integrally formed on the thermostat cover 81. The outlet joint 83 is connected to the inlet of the radiator 29 via a water pipe 77_5.

[0069] A bypass outlet joint 84 communicated to the combined chamber 80 via a communication passage 84' is integrally formed on the upper joint 79_2. The bypass outlet joint 84 is communicated to a heating chamber of the carburetor 12_2 of the rear bank 4_2, a heating chamber of the carburetor 12_1 of the front bank 4_1, and the suction pipe 75 in sequence by way of a bypass water pipe 85. The bypass outlet joint 84 has an inside diameter sufficiently smaller than that of the outlet joint 83 of the thermostat cover 81.

[0070] When the temperature of water in the combined chamber 80 becomes equal to or less than a specific temperature, the thermostat 82 blocks the combined chamber 80 from the thermostat cover 81 and opens the communication passage 84' between the combined chamber 80 and the bypass outlet joint 84. On the other hand, when the temperature of water in the combined chamber 80 becomes more than the specific temperature, the thermostat 82 communicates the combined chamber 80 to the thermostat cover 81 and closes the communication passage 84'.

[0071] As described, when the water pump 62 is driven by the rotation of the crank shaft 15 via the pump drive gear 56 and the pump shaft 61, if the temperature of water in the combined chamber 80 is relatively low, the thermostat 82 blocks the combined chamber 80 from the thermostat cover 81 and opens the communication passage 84'. Consequently, cooling water is fed first from the discharge pipe 76 to the water jacket 24_1 of the front bank 4_1 by the water pump 62. Here, about a half of the cooling water is immediately fed to the water jacket 24_2 of the rear bank 4_2 by way of the lower communication water pipe 77_3, and the remaining cooling water passes through the water jacket 24_1 of the front bank 4_1 and is then fed to the combined chamber 80 of the rear bank 4_2 by way of the upper communication water pipe 77_4. In the combined chamber 80, the cooling water is combined with the above cooling water having passed through the water jacket 24_2 of the rear bank 4_2. The cooling water thus combined is fed from the combined chamber 80 to the bypass outlet joint 84 by way of the communication passage 84', being further fed from the bypass outlet joint 84 to the heating chambers of the carburetors 12_2 and 12_1 of the rear and front banks 4_2 and 4_1 in sequence, and is returned to the suction pipe 75 of the water pump 62. Thereafter, the same circulation is repeated. Such circulation of cooling water not by way of the radiator 29 makes it possible to promote the warming of the internal combustion engine E, and to heat the carburetors 12_1 and 12_2 thereby preventing icing of a fuel nozzle and its neighborhood.

[0072] With advance of the warming of the internal combustion engine E, the temperature of the cooling water whose components having passed through the water jackets 24_1 and 24_2 of the front and rear banks 4_1 and 4_2 and combined in the combined chamber 80 becomes the above specific temperature. At this time, since the thermostat 82 communicates the combined chamber 80 to the thermostat cover 81 and closes the communication passage 84', the above cooling water flows on the outlet joint 83 side, and is returned to the suction pipe 75 of the water pump 62 by way of the radiator 29. Thereafter, the same circulation is repeated. Accordingly, the front and rear banks 4_1 and 4_2 can be effectively cooled with the cooling water cooled by the radiation action of the radiator 29.

[0073] Since the lower and upper communication water pipes 77_3 and 77_4 are sufficient to be relatively short in length and are disposed in the valley portion 28 between both the banks 4_1 and 4_2, they are hidden by both the banks 4_1 and 4_2. The water pipes 77_3 and 77_4, therefore, are inconspicuous as seen from the outside, that is, do not degrade the appearance of the internal combustion engine E.

[0074] Since the thermostat 82 is disposed in the combined chamber 80 in which components of cooling water having cooled the front and rear banks 4_1 and 4_2 are combined, it can suitably control the water temperature in both the banks 4_1 and 4_2 by certainly detecting an average water temperature in both the banks 4_1 and 4_2. Further, it is not required to make a layout of piping for the thermostat 82, thereby simplifying the entire piping layout.

[0075] Since the thermostat cover 81 including the outlet joint 83 projecting forwardly is connected to the front surface of the upper portion of the rear bank 4_2, it is possible to reduce the degree of bending of the water pipe 77_5 for communicating the outlet joint 83 to the inlet of the radiator 29, and hence to make small the flow resistance of the water pipe 77_5 and also improve the entire appearance of the internal combustion engine E.

[0076] Since the bypass outlet joint 84 having the inside diameter smaller than that of the upper joint 79_2 of

the rear bank 4_2 and being communicated to the combined chamber 80 is integrally formed on the upper joint 79_2, it is possible to collectively mount the upper joint 79_2 and the bypass outlet joint 84 to the rear bank 4_2, and hence to simplify the piping works.

[0077] Since the oil pump 57 and the water pump 62 are coaxially disposed and are driven by the common pump shaft 61 driven by the first drive gear 54a, it is possible to simplify the drive system thereof.

[0078] Since the oil pump 57 is disposed adjacent to the over-running clutch 53 in the radial direction, it is possible to suppress the increase in lateral with of the internal combustion engine E, although the oil pump 57 and the water pump 62 are coaxially disposed.

[0079] Since the oil pump 57 and the water pump 62 are disposed in front of and over the crank shaft 15, it is possible to compactly form the rear portion of the crank case 21 and the mission case portion 95 continuous thereto without any interference with the oil pump 57 and the water pump 62, and hence to ensure a desirable ground clearance of the internal combustion engine E and easily reduce the heights of the driver's seat 6a and the pillion seat 6b. In this case, although the front portion of the crank case 21 is slightly swelled by the effect of the above arrangement of the oil pump 57 and the water pump 62, the swelled portion of the crank case 21 is contained in the lower dead space of the front bank 4_1, and therefore, it does not obstruct the compactness of the internal combustion engine E.

[0080] Since the drive system of both the pumps 57 and 62 disposed over the crank shaft 15 is not required to be dipped in oil accumulated in the oil sump 66, it is possible to eliminate the agitation of oil by the drive system and hence to reduce the power loss.

[0081] Since the input shaft 96 and the output shaft 97 of the transmission 8 are horizontally disposed directly after the crank shaft 15 without any interference with the oil pump 57 and the water pump 62, it is possible to achieve the compactness of the transmission case portion 95 and also flatten the upper wall of the transmission case portion 95. This makes it possible to sufficiently ensure the distance between the transmission case portion 95 and the rear exhaust pipe 13_2 and hence to easily prevent the transmission case portion 95 and the transmission 8 contained therein from being thermally affected by the rear exhaust pipe 13_2.

Starting System (Figs. 2 and 7)

[0082] A containing recessed portion 88 is formed in the bottom surface of the front portion of the crank case 21, and the starting motor 11 is disposed in the containing recessed portion 88 with its axial line directed in parallel to the crank shaft 15. A casing 89 of the starting motor 11 is mounted on the crank case 21 in such a manner that a cylindrical supporting portion 89a at one end of the casing 89 is liquid-tightly fitted in a through-hole 90 formed in the end wall of the containing recessed portion 88 and a mounting arm portion 89b at the other end of the casing 89 is fastened to the crank case 21 with a bolt 111. The leading end of a rotor shaft 91 of the starting motor 11 is inserted in the crank case 21, and a pinion 92 formed on the leading end of the rotor shaft 91 is adapted to drive the starting gear 52 via a reduction gear train 93. The starting gear 52, the over-running clutch 53, and the reduction gear train 93 constitute a starting transmission unit 94 for transmitting the rotational power of the starting motor 11 to the crank shaft 15.

[0083] As described above, since the starting motor 11 is disposed in front of and under the crank shaft 15, the starting motor 11 also does not obstruct the compactness of the rear portion of the crank case 21 and the transmission case portion 95, and since the starting motor 11 is contained in the lower dead space of the front bank 4_1, it does not obstruct the compactness of the internal combustion engine E. Further, the reduction gear train 93 is dipped in oil accumulated in the oil sump 66 on the bottom of the crank case 21 by the effect of the above arrangement of the starting motor 11; however, since the reduction gear train 93 is activated not during operation of the engine but upon start-up of the engine, it does not agitate the oil during operation of the engine and thereby does not cause the power loss.

Claims

1. A cooling device for a V-type internal combustion engine, in which water jackets (24_1, 24_2) are respectively formed on first and second banks (4_1, 4_2) of a V-type internal combustion engine (E), wherein a discharge pipe (76) of a water pump (62) is communicated to said water jacket (24_1) of said first bank (4_1); a lower portion of said water jacket (24_1) of said first bank (4_1) is communicated to a lower portion of said water jacket (24_2) of said second bank (4_2) via a lower communication water pipe (77_3); wherein said lower communication water pipe (77_3) is disposed in a valley portion (28) between said both banks (4_1, 4_2),
characterized in that
an upper portion of said water jacket (24_1) of said first bank (4_1) is communicated via an upper communication water pipe (77_4) to a combined chamber (80) which is formed in said second bank (4_2) and connected to an upper portion of said water jacket (24_2) of said second bank (4_2); wherein said upper communication water pipe (77_4) is disposed in a valley portion (28) between said both banks (4_1, 4_2); and wherein a thermostat (82) for opening/closing an outlet of said combined chamber (80) is disposed in said combined chamber (80), and an outlet joint (83) of said combined chamber (80) is communicated to an inlet of a radiator (29).

2. A cooling device for a V-type internal combustion

engine according to claim 1, wherein said first and second banks (4_1, 4_2) are disposed fore and aft when said internal combustion engine (E) is mounted on a motorcycle (M); said outlet joint (83) of said combined chamber (80) is provided on an upper front surface of said second bank (4_2) in such a manner as to project therefrom; and said outlet joint (83) is communicated via a water pipe (77_5) to the inlet of said radiator (29) disposed in front of said internal combustion engine (E).

3. A cooling device for a V-type internal combustion engine according to claim 1 or 2, wherein an upper joint (79_2) connected to said upper communication water pipe (77_4) is connected to said second bank (4_2); a bypass outlet joint (84) having a diameter smaller than that of said upper joint (79_2) and communicated to said combined chamber (80) is integrally formed to said upper joint (79_2); and a bypass water pipe (85) communicated to a suction pipe (75) of said water pump (62) is connected to said bypass outlet joint (84).

4. A cooling device for a V-type internal combustion engine according to claim 3, wherein heating chambers for carburetor (12_1, 12_2) of said both banks (4_1, 4_2) are interposed in said bypass water pipe (85).

Patentansprüche

1. Kühleinrichtung für einen V-Verbrennungsmotor, bei der Wassermäntel (24_1, 24_2) jeweils an ersten und zweiten Bänken (4_1, 4_2) eines V-Verbrennungsmotors (E) ausgebildet sind, wobei ein Auslassrohr (76) einer Wasserpumpe (62) mit dem Wassermantel (24_1) der ersten Bank (4_1) in Verbindung steht; ein unterer Abschnitt des Wassermantels (24_1) der ersten Bank (4_1) mit einem unteren Abschnitt des Wassermantels (24_2) der zweiten Bank (4_2) über ein unteres Verbindungswasserrohr (77_3) in Verbindung steht; wobei das untere Verbindungswasserrohr (77_3) in einem Talabschnitt (28) zwischen beiden Bänken (4_1, 4_2) angeordnet ist, **dadurch gekennzeichnet, dass** ein oberer Abschnitt des Wassermantels (24_1) der ersten Bank (4_1) über ein oberes Verbindungswasserrohr (77_4) mit einer Vereinigungskammer (80) in Verbindung steht, welche in der zweiten Bank (4_2) ausgebildet ist und mit einem oberen Abschnitt des Wassermantels (24_2) der zweiten Bank (4_2) verbunden ist; wobei das obere Verbindungswasserrohr (77_4) in einem Talabschnitt (28) zwischen den beiden Bänken (4_1, 4_2) angeordnet ist; und wobei ein Thermostat (82) zum Öffnen/Schließen eines Auslasses der Vereinigungskammer (80) in der Vereinigungskammer (80) angeordnet ist und eine Auslassverbindung (83) der Vereinigungskammer (80) mit einem Einlass eines Kühlers (29) verbunden ist.

2. Kühleinrichtung für einen V-Verbrennungsmotor gemäß Anspruch 1, wobei die ersten und zweiten Bänke (4_1, 4_2) vorne und hinten angeordnet sind, wenn der Verbrennungsmotor (E) an einem Kraftrad (M) angebracht ist; wobei die Auslassverbindung (83) der Verbindungskammer (80) an einer oberen vorderen Fläche der zweiten Bank (4_2) in einer solchen Weise vorgesehen ist, dass sie von dieser vorsteht; und dass die Auslassverbindung (83) über ein Wasserrohr (77_5) mit dem Einlass des Kühlers (29) verbunden ist, welcher vor dem Verbrennungsmotor (E) angeordnet ist.

3. Kühleinrichtung für einen V-Verbrennungsmotor gemäß Anspruch 1 oder 2, wobei eine obere Verbindung (79_2), welche mit dem oberen Verbindungswasserrohr (77_4) verbunden ist, mit der zweiten Bank (4_2) verbunden ist; eine Bypass-Auslassverbindung (84), die einen kleineren Durchmesser als den der oberen Verbindung (79_2) aufweist und mit der Vereinigungskammer (80) verbunden ist, integral mit der oberen Verbindung (79_2) ausgebildet ist; und ein Bypass-Wasserrohr (85), das mit einem Saugrohr (85) der Wasserpumpe (62) verbunden ist, mit der Bypass-Auslassverbindung (84) verbunden ist.

4. Kühleinrichtung für einen V-Verbrennungsmotor gemäß Anspruch 3, wobei Heizkammern für einen Vergaser (12_1, 12_2) der beiden Bänke (4_1, 4_2) in dem Bypass-Wasserrohr (85) vorgesehen sind.

Revendications

1. Dispositif de refroidissement pour moteur à combustion interne en V, dans lequel des chemises d'eau (24_1, 24_2) sont respectivement formées sur les premier et deuxième bancs (4_1, 4_2) d'un moteur à combustion interne en V (E), dans lequel une durite d'évacuation (76) d'une pompe à eau (62) communique avec ladite chemise d'eau (24_1) dudit premier banc (24_1) ; une partie inférieure de ladite chemise d'eau (24_1) dudit premier banc (4_1) communique avec une partie inférieure de ladite chemise d'eau (24_2) dudit deuxième banc (4_2) par l'intermédiaire d'une durite d'eau de communication inférieure (77_3) ; dans lequel ladite durite d'eau de communication inférieure (77_3) est disposée dans une partie en vallée (28) entre lesdits deux bancs (4_1, 4_2), **caractérisé en ce que**
une partie supérieure de ladite chemise d'eau (24_1) dudit premier banc (4_1) communique par l'intermédiaire d'une durite d'eau de communication supérieure (77_4) avec une chambre combinée (80) qui est formée dans ledit deuxième banc (4_2) et con-

nectée à une partie supérieure de ladite chemise d'eau (24_2) dudit deuxième banc (4_2) ; dans lequel ladite durite d'eau de communication supérieure (77_4) est disposée dans une partie en vallée (28) entre lesdits deux bancs (4_1, 4_2) ; et dans lequel un thermostat (82) pour ouvrir/fermer une sortie de ladite chambre combinée (80) est disposé dans ladite chambre combinée (80), et un raccord de sortie (83) de ladite chambre combinée (80) communiquant avec une entrée d'un radiateur (29).

2. Dispositif de refroidissement pour un moteur à combustion interne en V selon la revendication 1, dans lequel lesdits premier et deuxième bancs (4_1, 4_2) sont disposés à l'avant et à l'arrière quand ledit moteur à combustion interne (E) est monté sur une motocyclette (M) ; ledit raccord de sortie (83) de ladite chambre combinée (80) est fourni sur une surface frontale supérieure dudit deuxième banc (4_2) de façon telle à se projeter à partir de celui-ci ; et ledit raccord de sortie (83) communique par l'intermédiaire d'une durite d'eau (77_5) à l'entrée dudit radiateur (29) disposé devant ledit moteur à combustion interne (E).

3. Dispositif de refroidissement pour un moteur à combustion interne en V selon la revendication 1 ou 2, dans lequel un raccord supérieur (79_2) connecté à ladite durite d'eau de communication supérieure (77_4) est connecté audit deuxième banc (4_2) ; un raccord de sortie de dérivation (84) ayant un diamètre inférieur à celui dudit raccord supérieur (79_2) et en communication avec ladite chambre combinée (80) est formé d'un seul tenant avec ledit raccord supérieur (79_2) ; et une durite d'eau de dérivation (85) en communication avec une durite d'aspiration (75) de ladite pompe à eau (62) est connectée audit raccord de sortie de dérivation (84).

4. Dispositif de refroidissement pour un moteur à combustion interne en V selon la revendication 3, dans lequel des chambres de réchauffage pour carburateur (12_1, 12_2) desdits deux bancs (4_1, 4_2) sont intercalées dans ladite durite d'eau de dérivation (85).

FIG. 1.

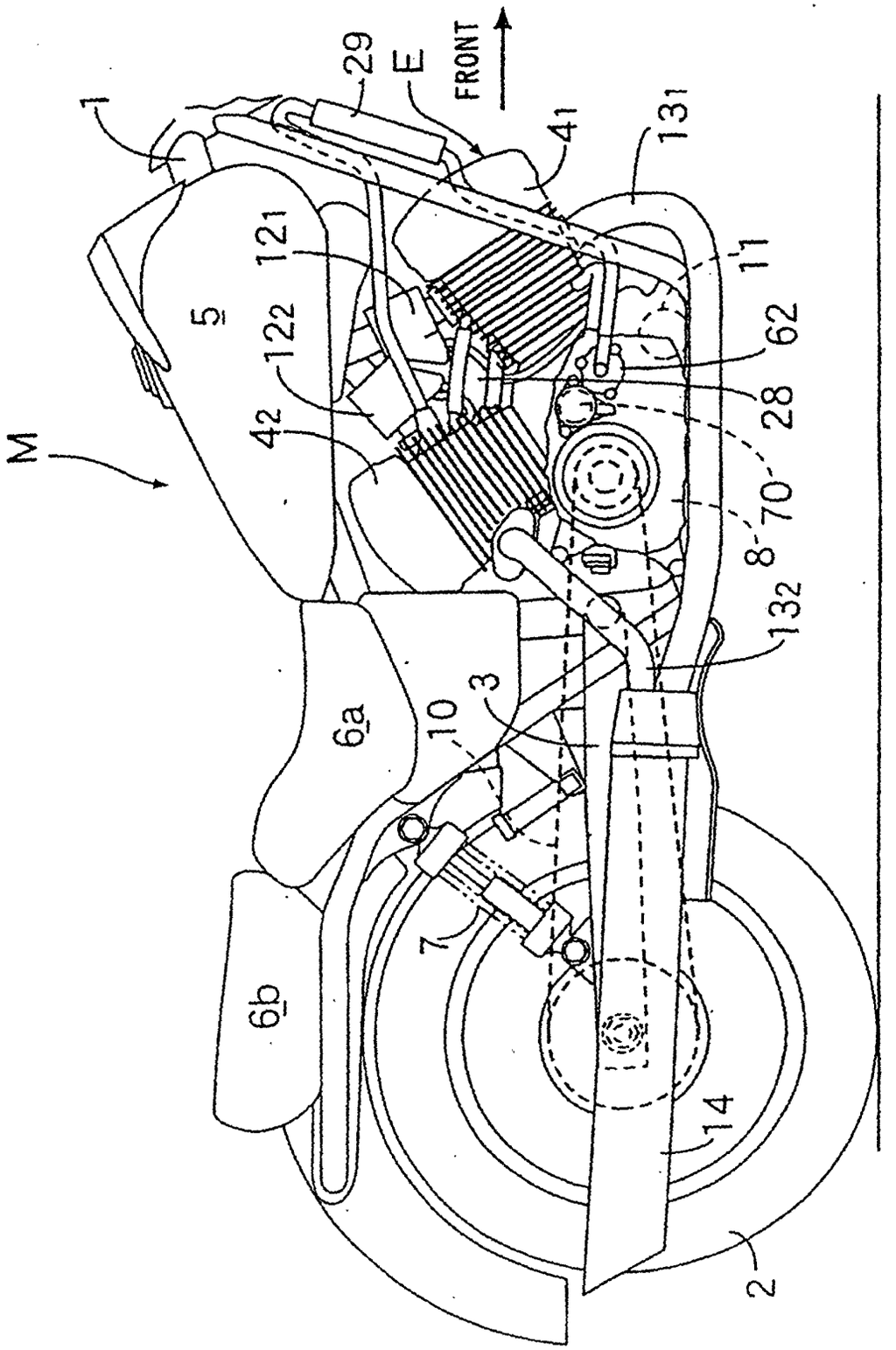

FIG. 2

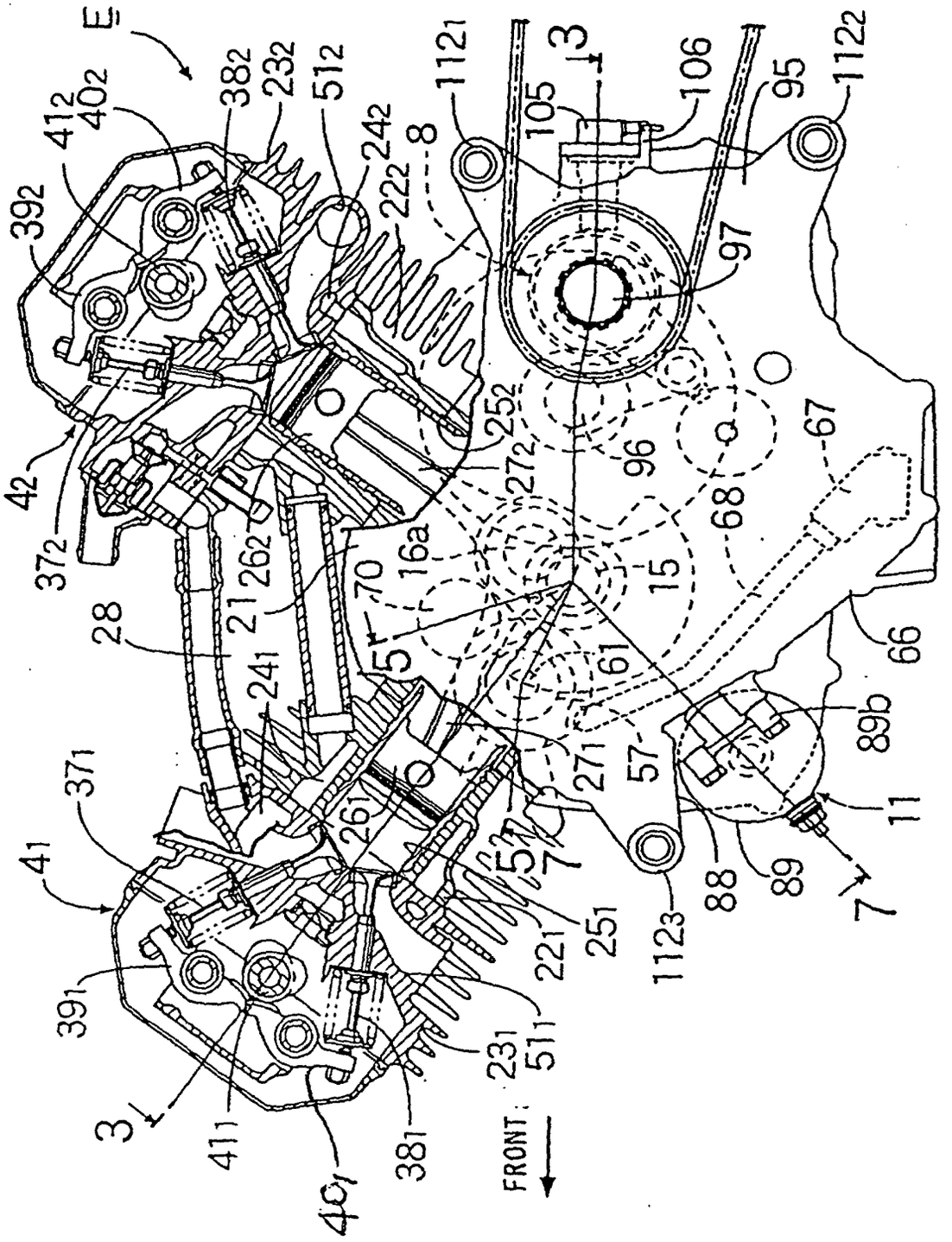
E
FRONT
3
5
7
8
11
15
16a
21
28
42
57
61
66
67
68
70
88
89
89b
95
96
97
105
106
112₁
112₂
112₃
23₁
23₂
24₁
24₂
25₁
25₂
26₁
26₂
27₁
27₂
38₁
38₂
39₁
39₂
40₁
40₂
41₁
41₂
51₁
51₂
22₁
22₂
37₁
37₂

FIG. 3

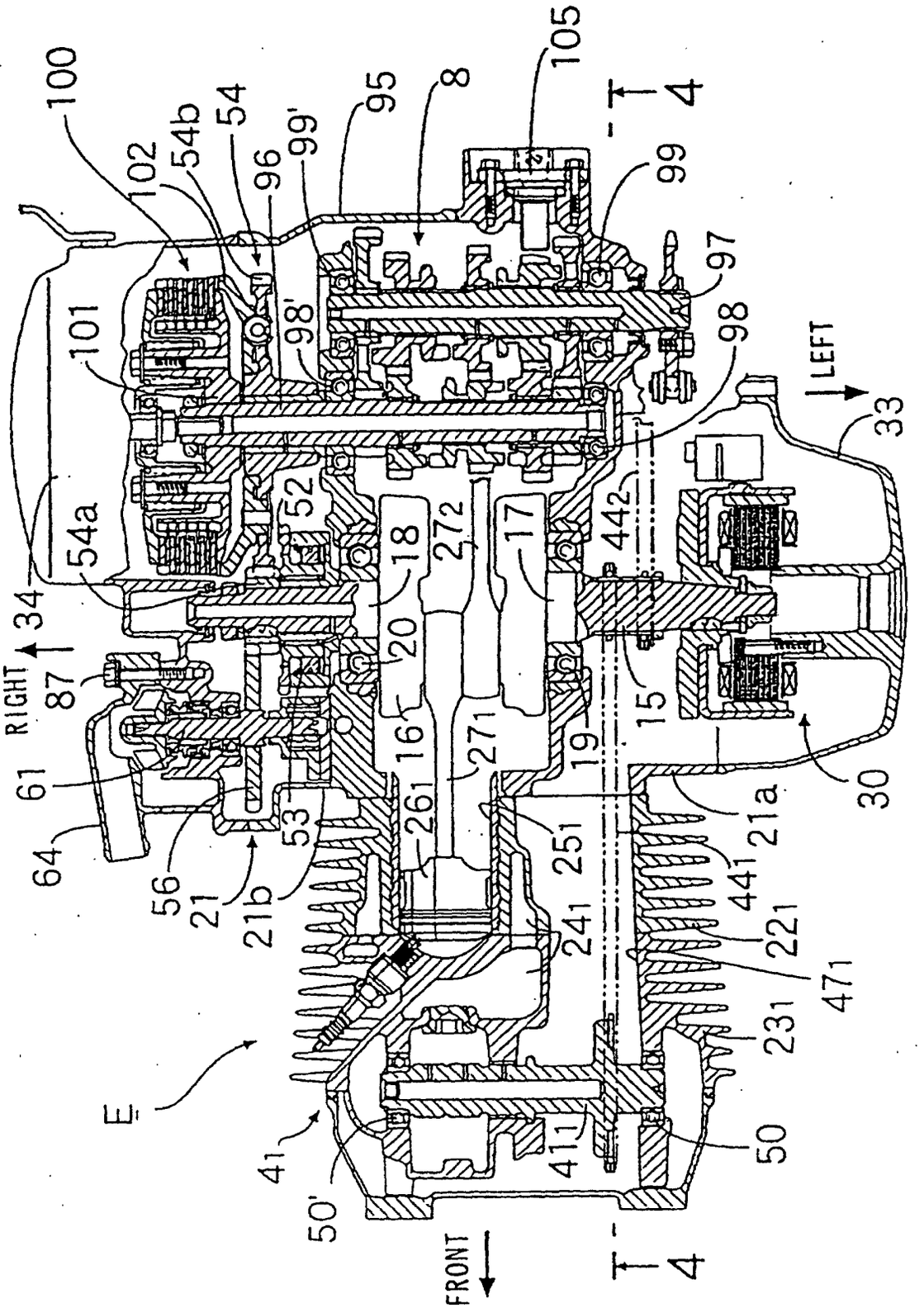
100
102
54b
54
96
99'
95
8
105
4
4
99
97
98
98'
101
LEFT
33
54a
34
RIGHT
87
61
64
56
21
21b
53
52
18
20
16
272
271
261
251
241
17
442
15
19
21a
30
441
221
471
231
50
411
41
50'
E
FRONT

FIG. 4

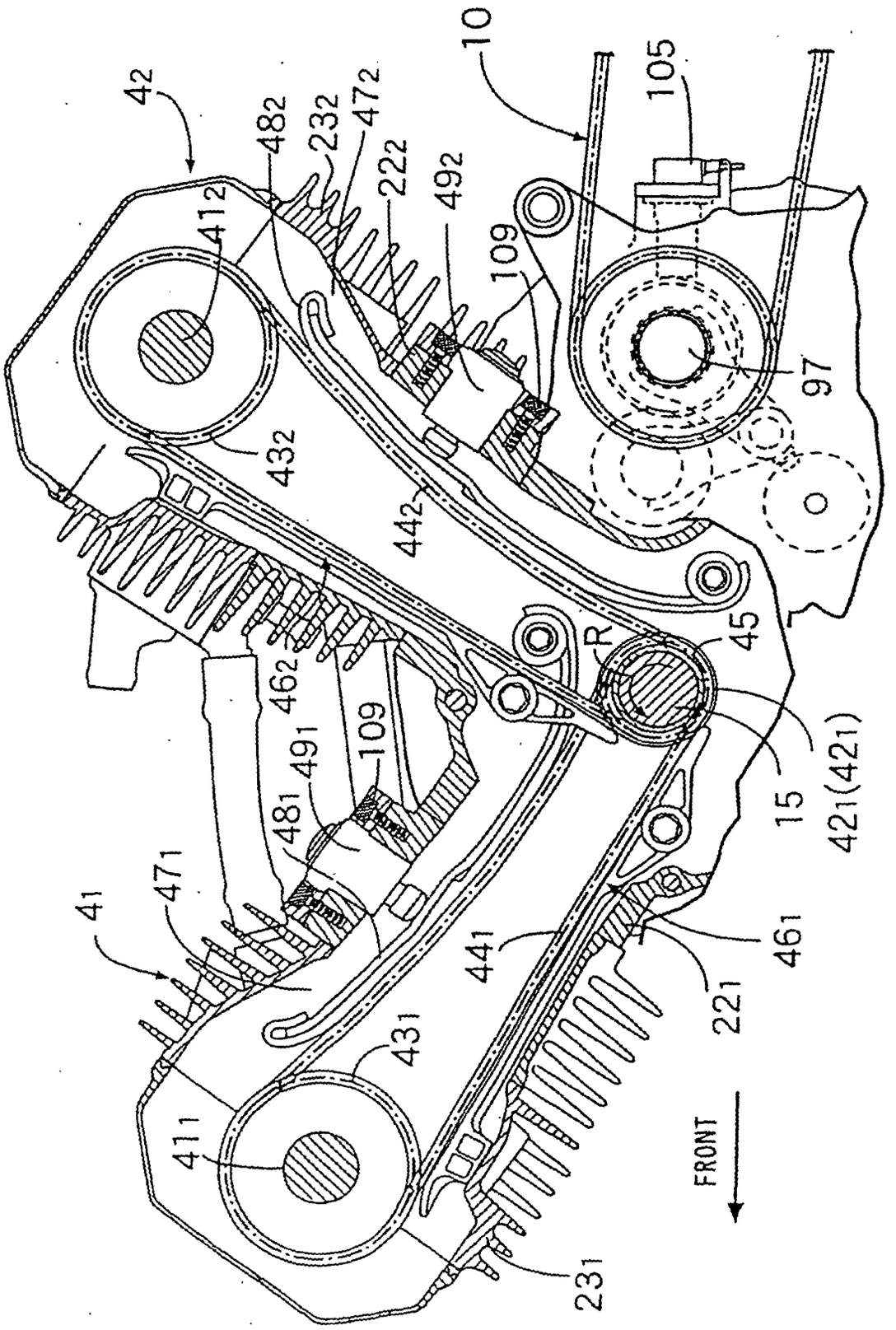
42
482
232
472
222
492
412
10
105
109
97
432
442
45
R
462
491
109
481
15
421(421)
41
471
441
461
221
431
411
231
FRONT

FIG. 5

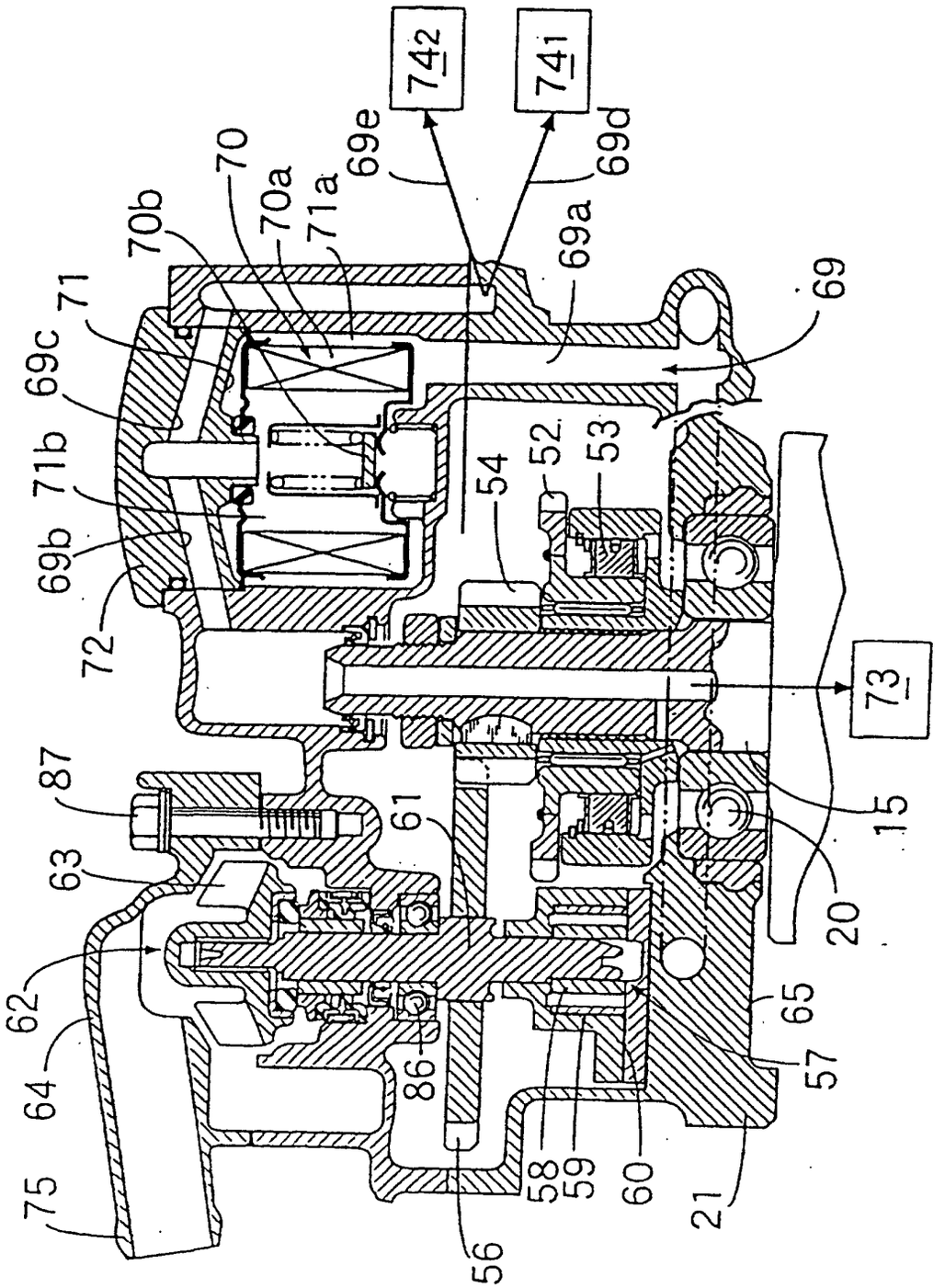
74 2
74 1
69e
69d
70
70a
71a
70b
69a
69
71
69c
71b
69b
72
54
52
53
73
87
61
15
63
20
62
65
64
86
57
58
59
60
21
75
56

FIG. 6

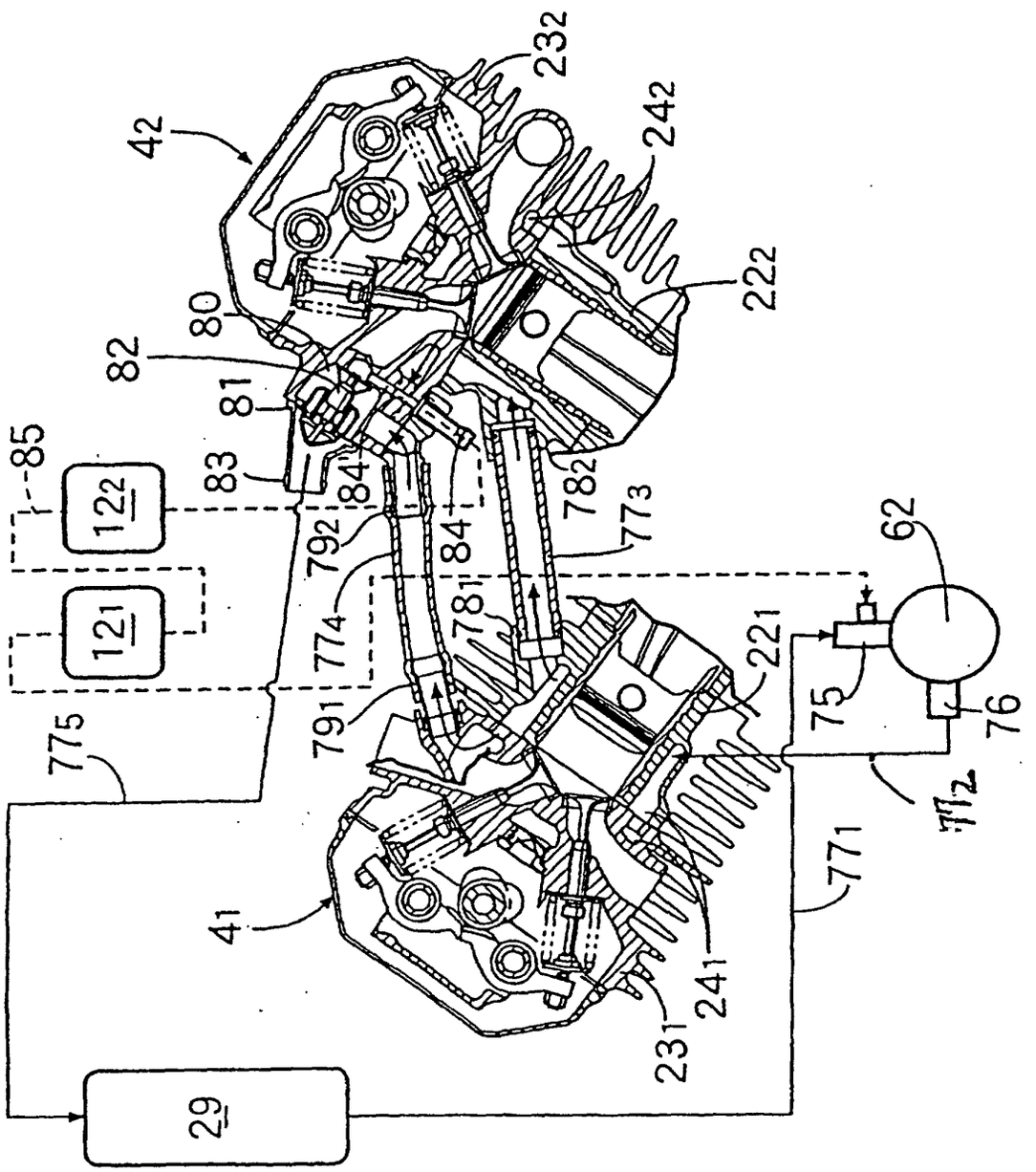
42
232
242
222
80
82
81
85
83
84'
84
782
773
792
774
781
121
122
62
221
75
76
772
775
791
771
41
241
231
29

FIG. 7

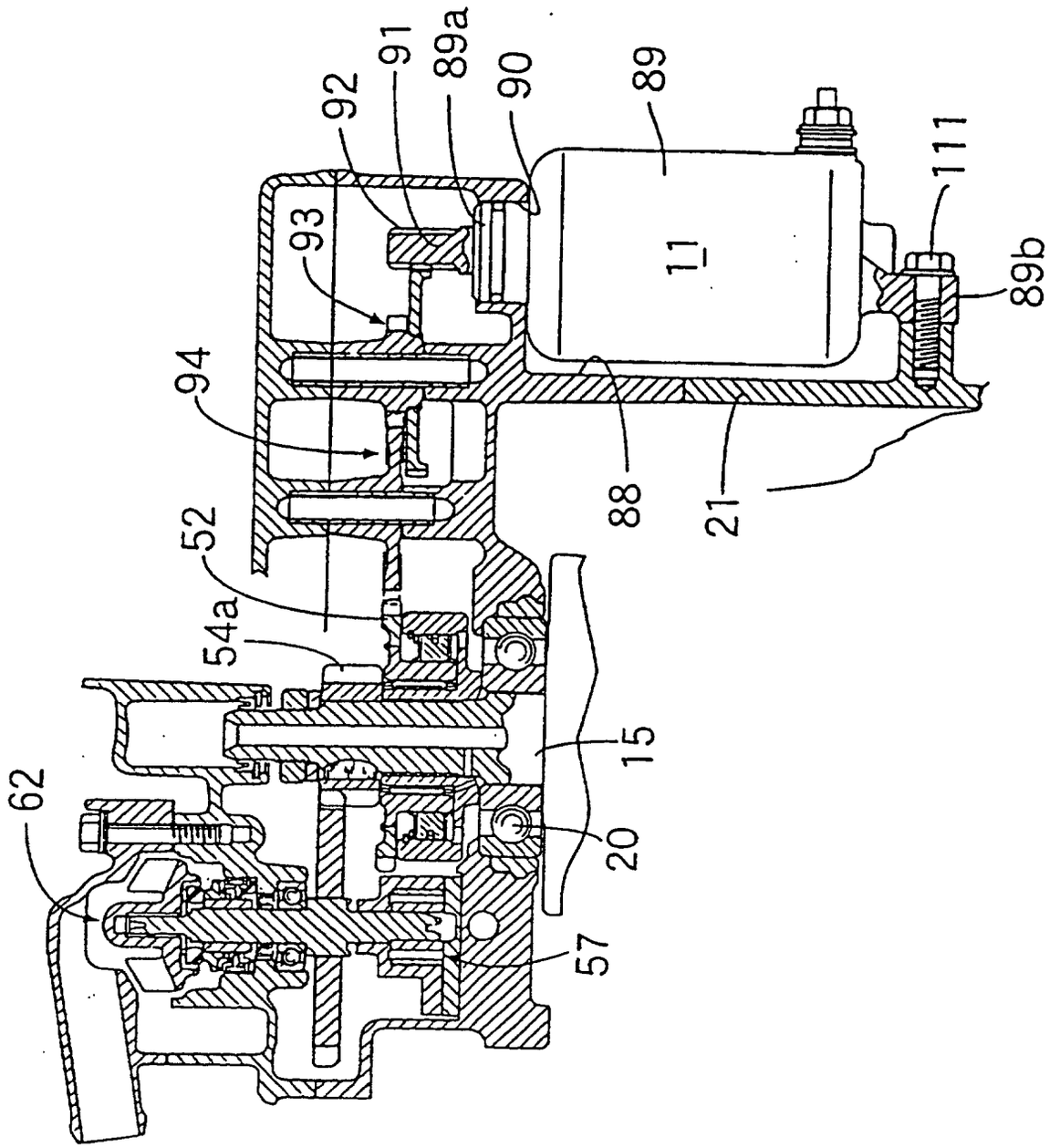

FIG. 8

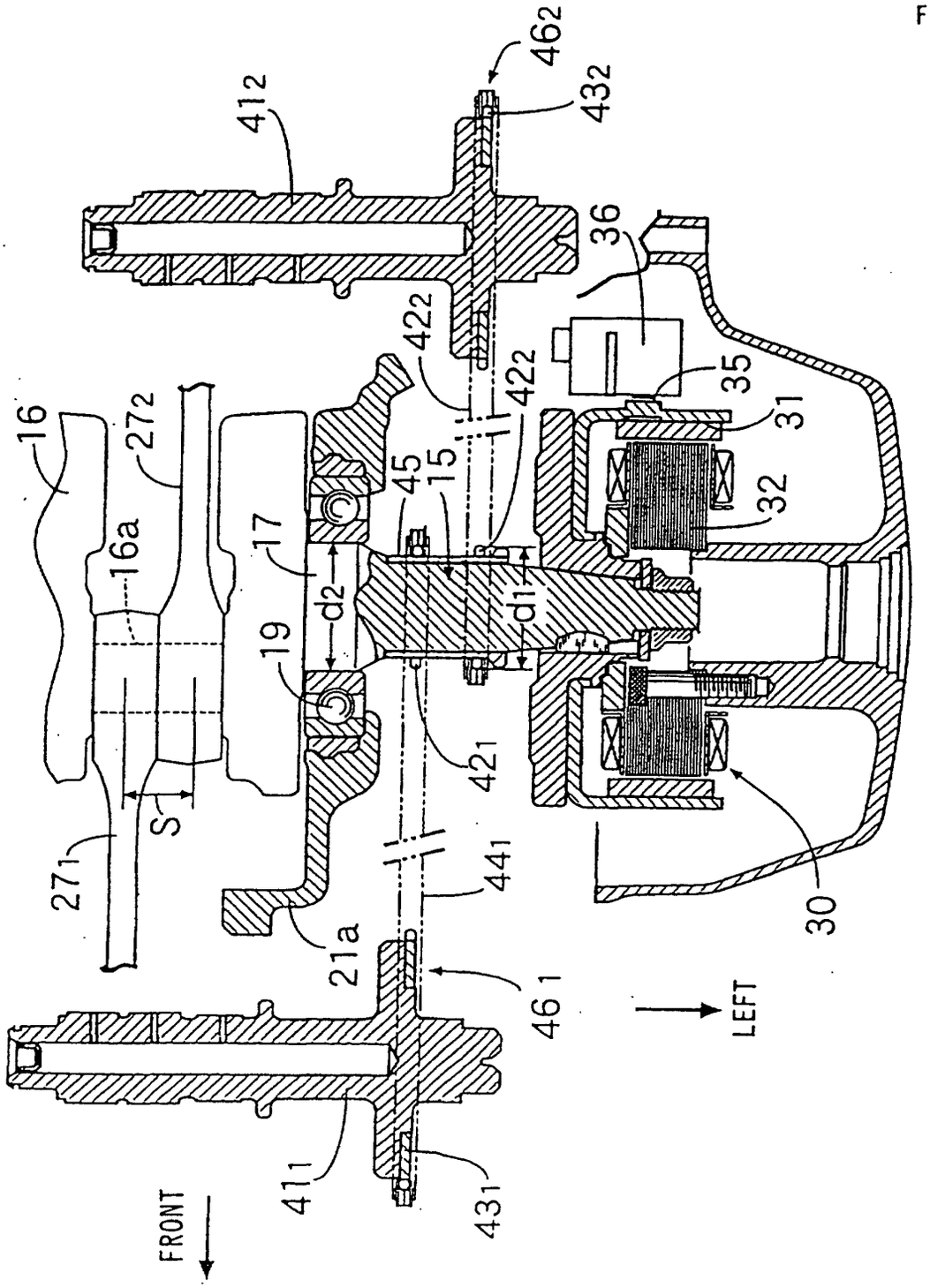
462
432
412
36
422
422
35
31
16
272
45
15
32
16a
17
d2
d1
19
421
S
271
441
21a
461
30
LEFT
FRONT
411
431

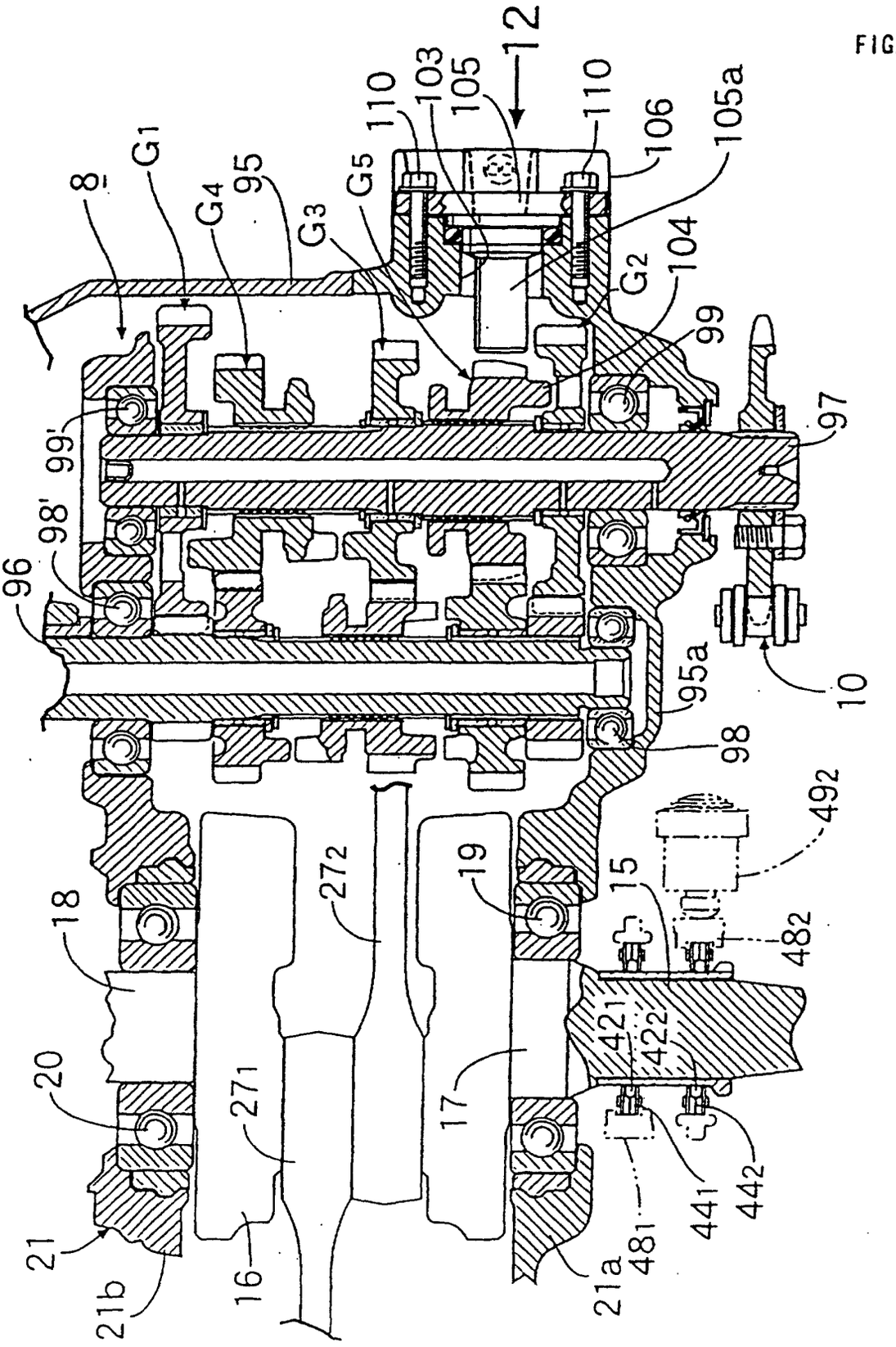
12
110
103
105
110
106
105a
8
G1
G4
95
G3
G5
G2
104
99
97
99'
98'
96
95a
10
98
49₂
15
48₂
18
27₂
19
20
27₁
17
42₁
42₂
44₁
44₂
48₁
21
21b
16
21a

FIG. 9

FIG. 10

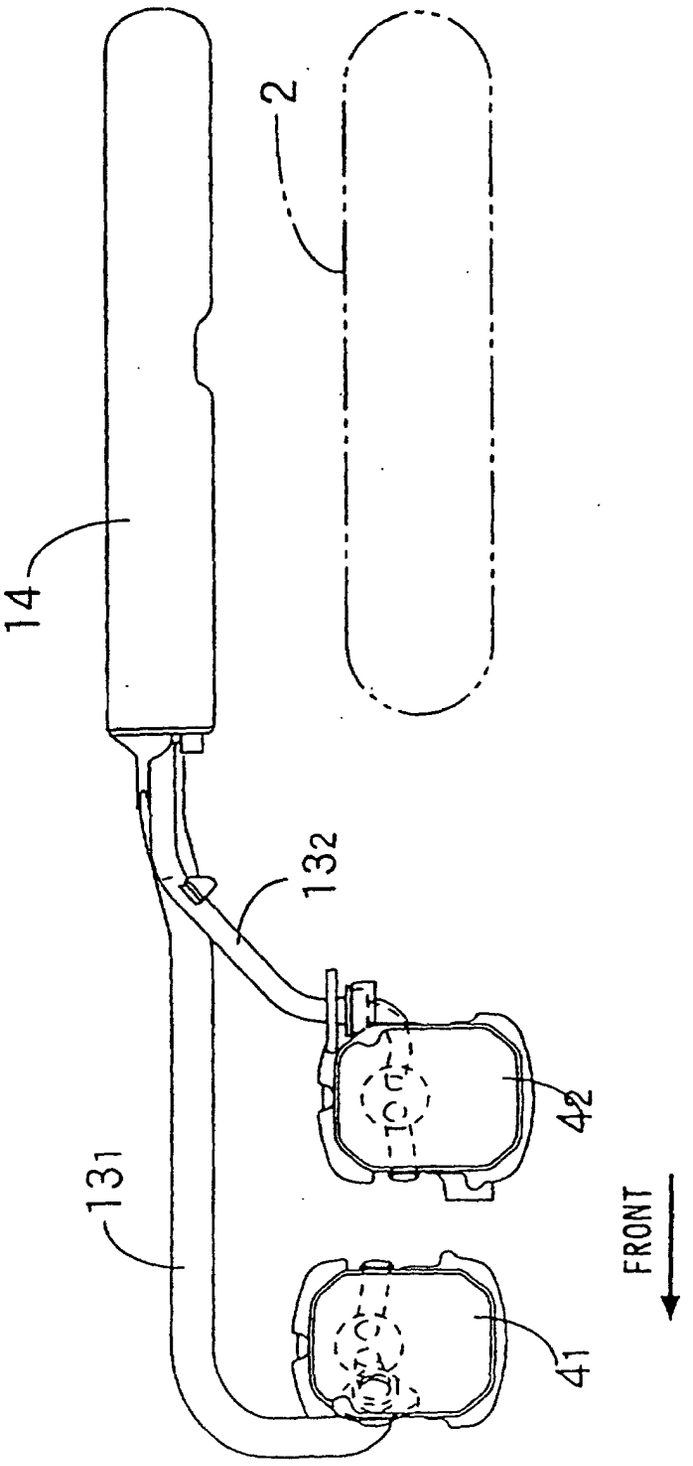

FIG. 11

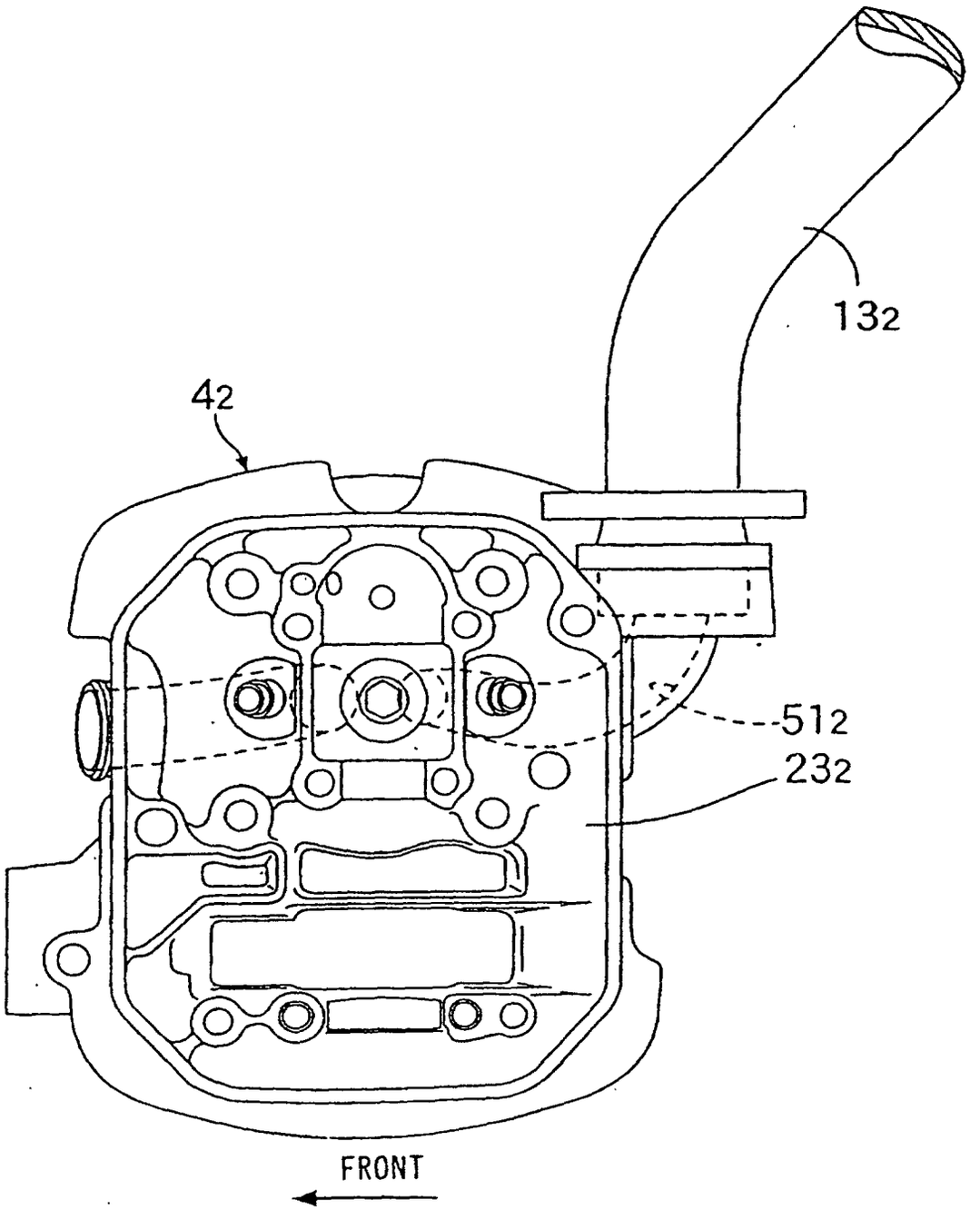

FIG. 12

