Aug. 26, 1924. 1,506,055

F. L. FULLER

TICKET PRINTING MECHANISM

Original Filed March 23, 1916 13 Sheets-Sheet 1

FIG. 1A

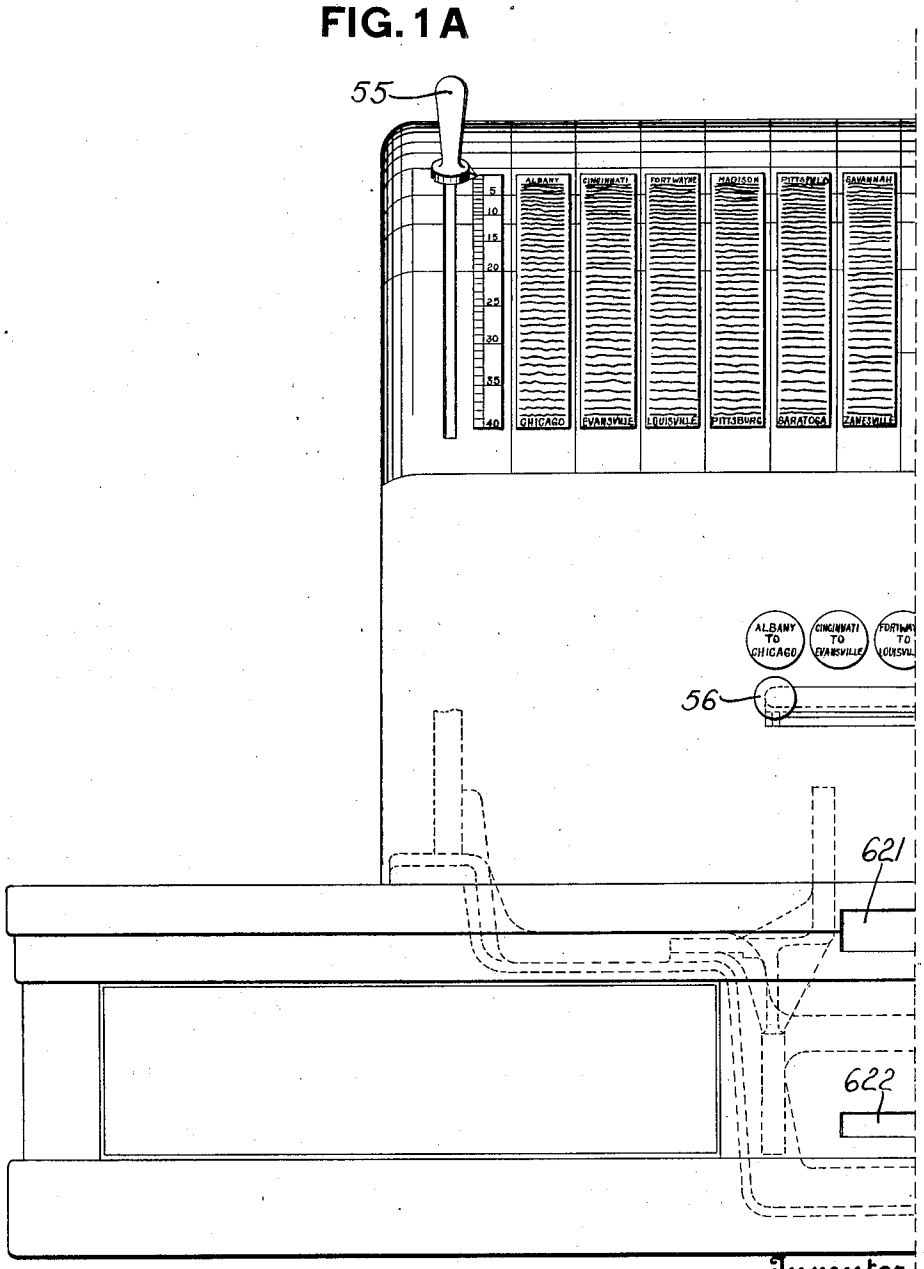

Inventor
Frederick L. Fuller
BY Earl Reist
Henry E. Stauffer
Attorneys

Aug. 26, 1924. 1,506,055

F. L. FULLER

TICKET PRINTING MECHANISM

Original Filed March 23, 1916 13 Sheets-Sheet 2

FIG. 1 B

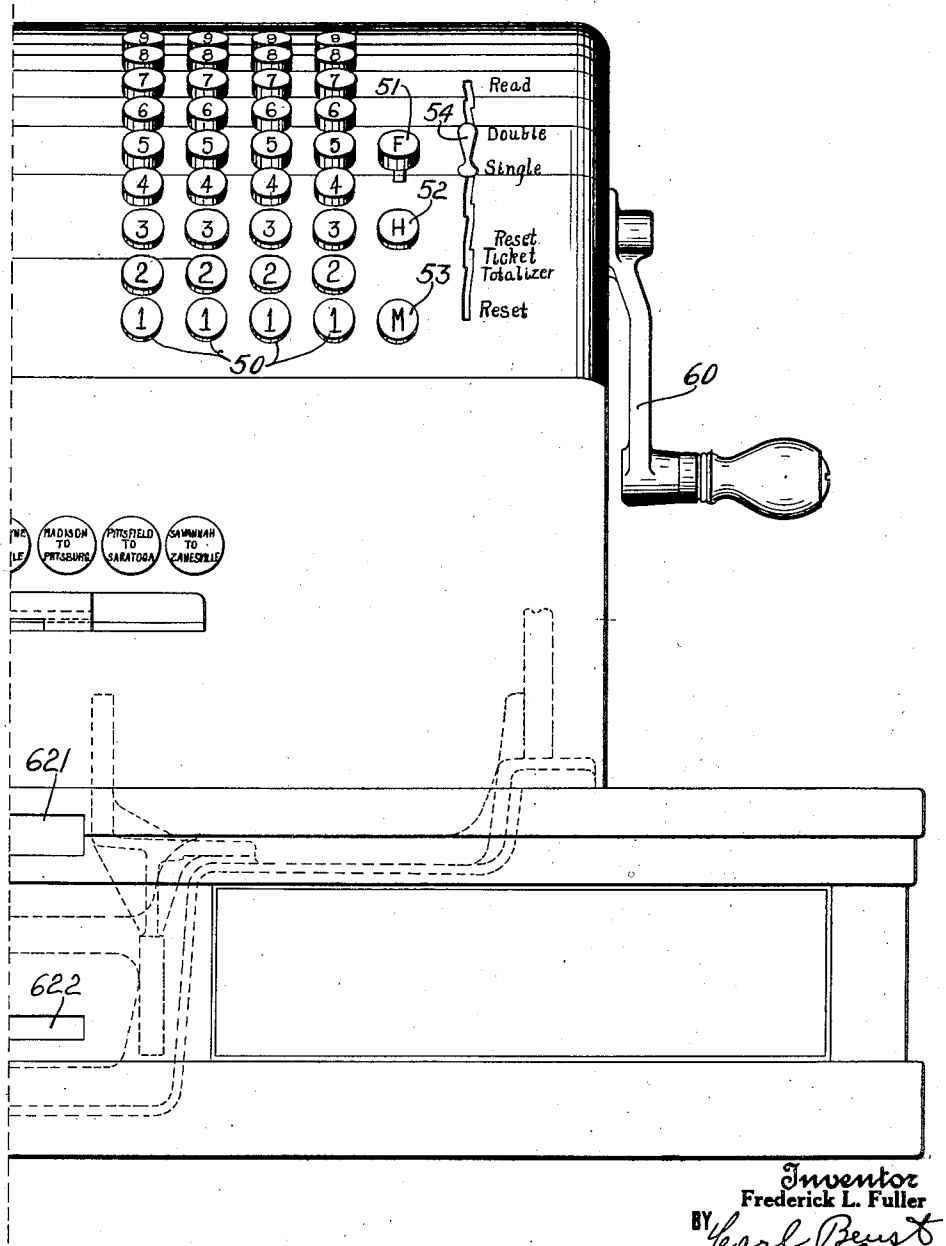

Inventor
Frederick L. Fuller
BY Earl Brust
Henry E. Stauffer
Attorneys

Aug. 26, 1924. 1,506,055

F. L. FULLER

TICKET PRINTING MECHANISM

Original Filed March 23, 1916 13 Sheets-Sheet 3

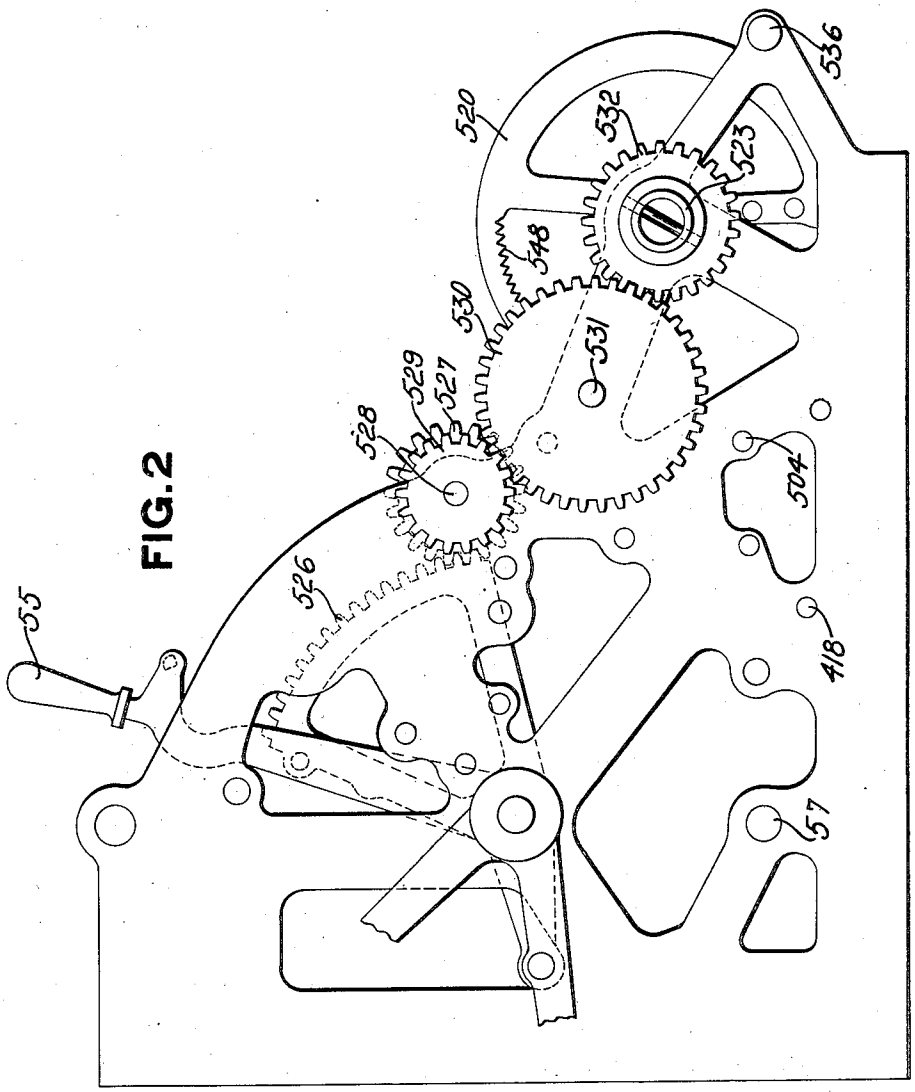

FIG. 2

Inventor
Frederick L. Fuller
BY Earl Benet
Henry C. Stauffer.
Attorneys

Aug. 26, 1924. 1,506,055

F. L. FULLER

TICKET PRINTING MECHANISM

Original Filed March 23, 1916 13 Sheets-Sheet 4

FIG. 3

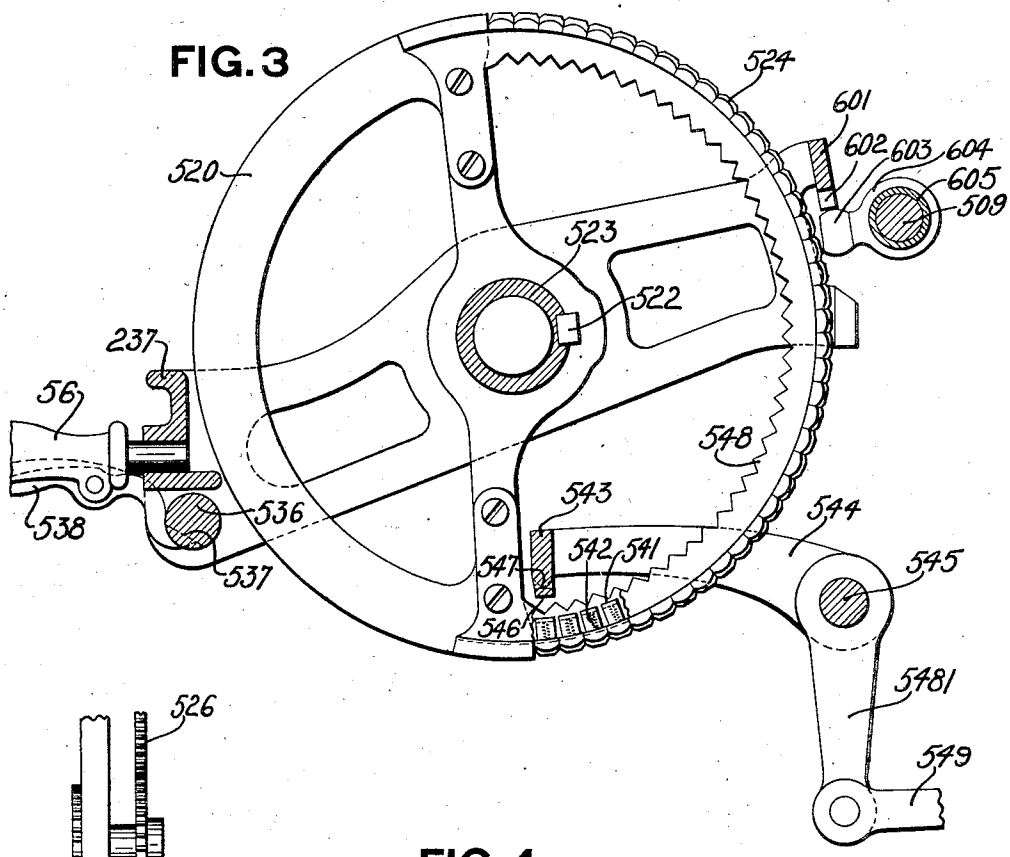

FIG. 4

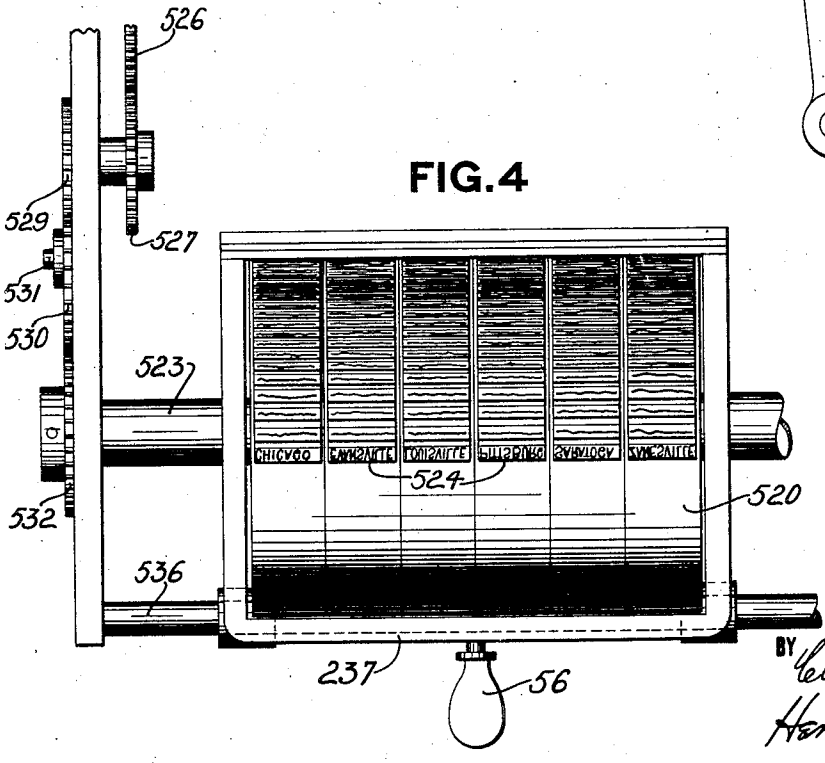

Inventor
Frederick L. Fuller
BY Pearl Beust
Henry E. Stauffer
Attorneys

Aug. 26, 1924. 1,506,055

F. L. FULLER

TICKET PRINTING MECHANISM

Original Filed March 23, 1916 13 Sheets-Sheet 5

FIG. 5

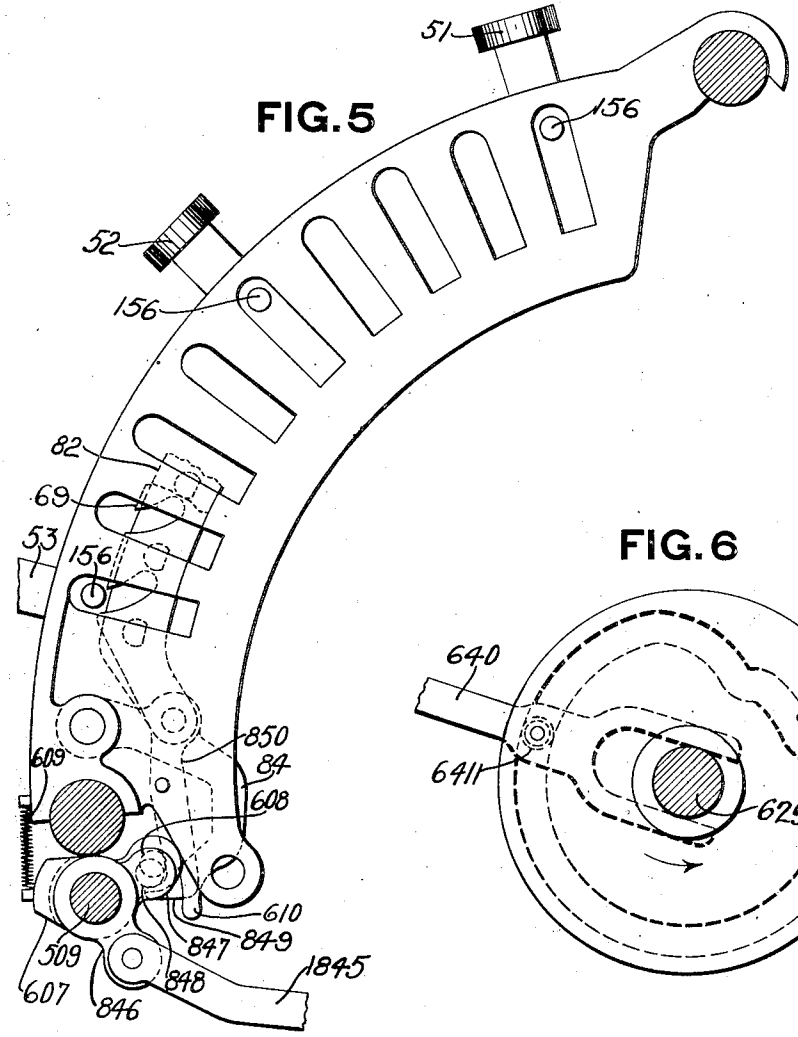

FIG. 6

FIG. 7

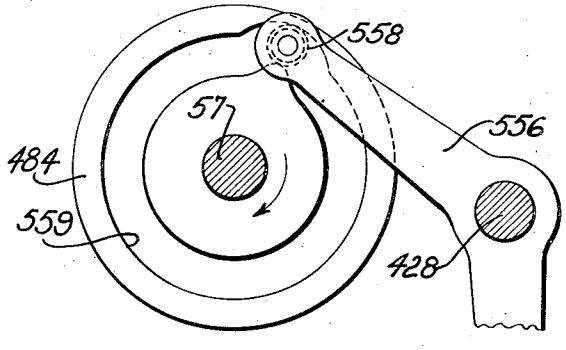

Inventor
Frederick L. Fuller
BY Pearl Beust
Harry E. Stauffer
Attorneys

Aug. 26, 1924. 1,506,055

F. L. FULLER

TICKET PRINTING MECHANISM

Original Filed March 23, 1916 13 Sheets-Sheet 6

FIG. 8

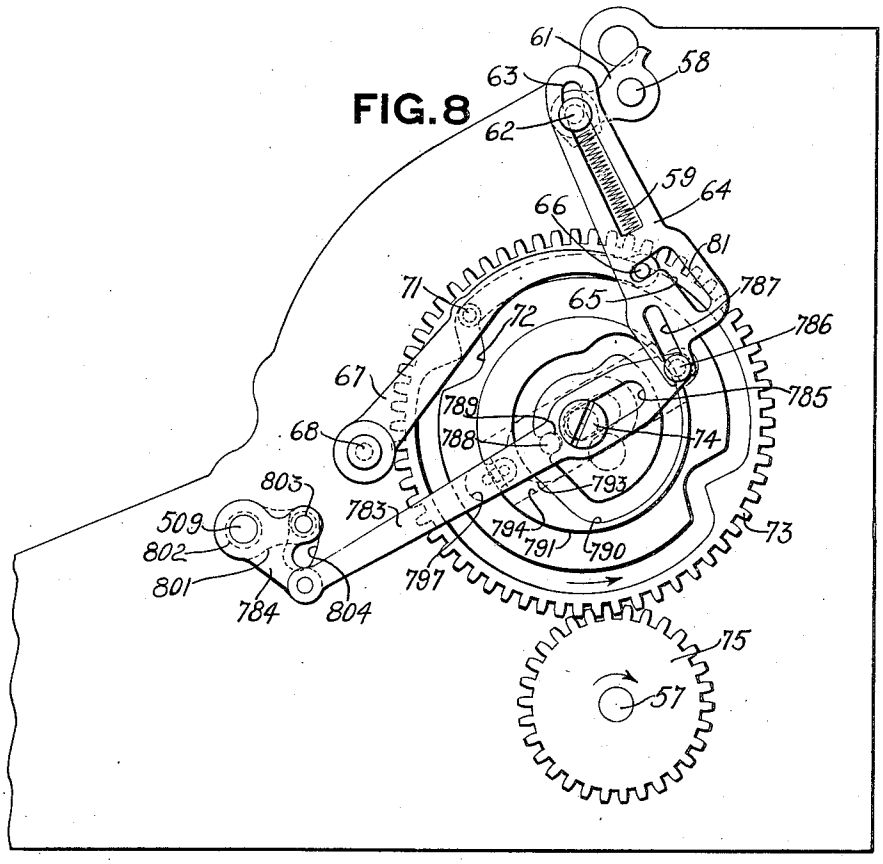

FIG. 9

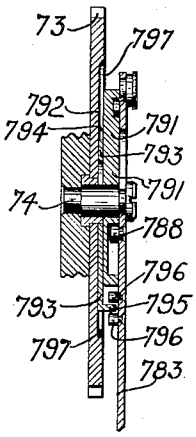

FIG. 10

0780	ALBANY
1265	CHICAGO
0031	CINCINNATI
0001	EVANSVILLE
0121	FORTWAYNE
0035	LOUISVILLE
0320	MADISON
0479	PITTSBURG
0000	$ 3728.50

825

FIG. 11

X.Y.Z. R.R. Co.
GOOD FOR ONE PASSAGE
NEW YORK AND
ALBANY
0738 F $-- 3.50

FIG. 12

4124 MAY 21, 1915

Inventor
Frederick L. Fuller
BY Pearl Brust
Henry E. Stauffer
Attorneys

Aug. 26, 1924. 1,506,055

F. L. FULLER

TICKET PRINTING MECHANISM

Original Filed March 23, 1916 13 Sheets-Sheet 7

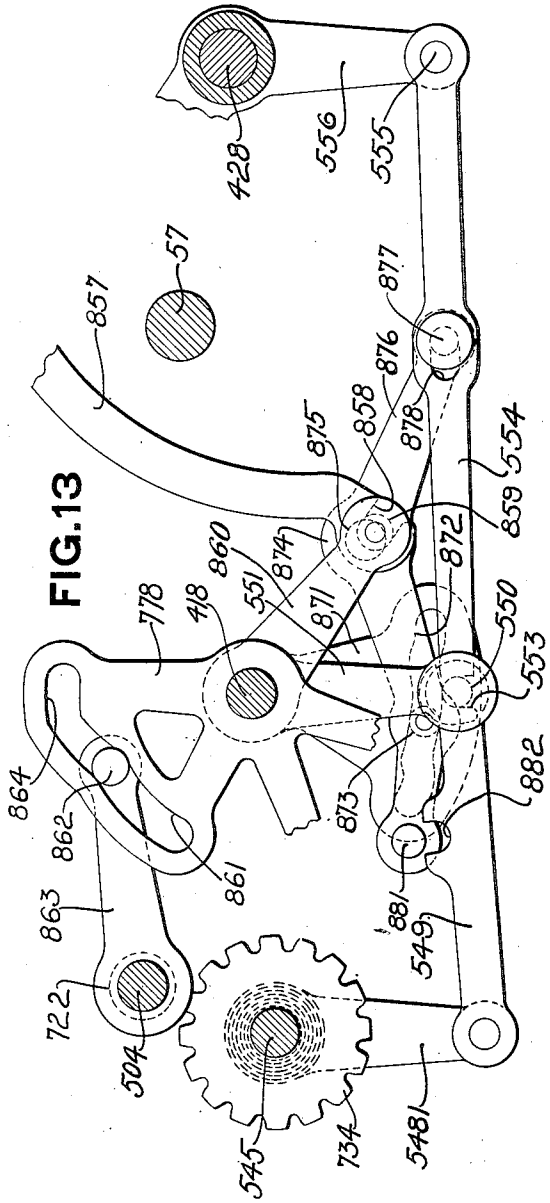

FIG.13

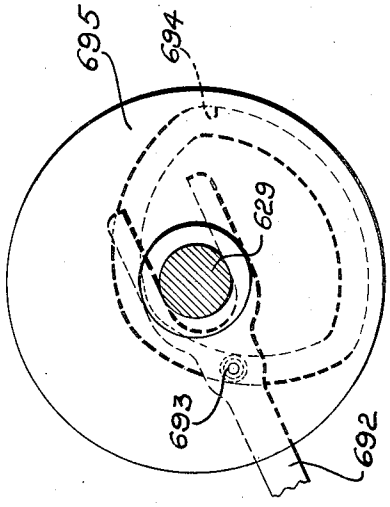

FIG.14

Inventor
Frederick L. Fuller
BY Pearl Beust
Henry E. Stauffer.

Attorneys

Aug. 26, 1924. 1,506,055

F. L. FULLER

TICKET PRINTING MECHANISM

Original Filed March 23, 1916 13 Sheets-Sheet 8

FIG. 15

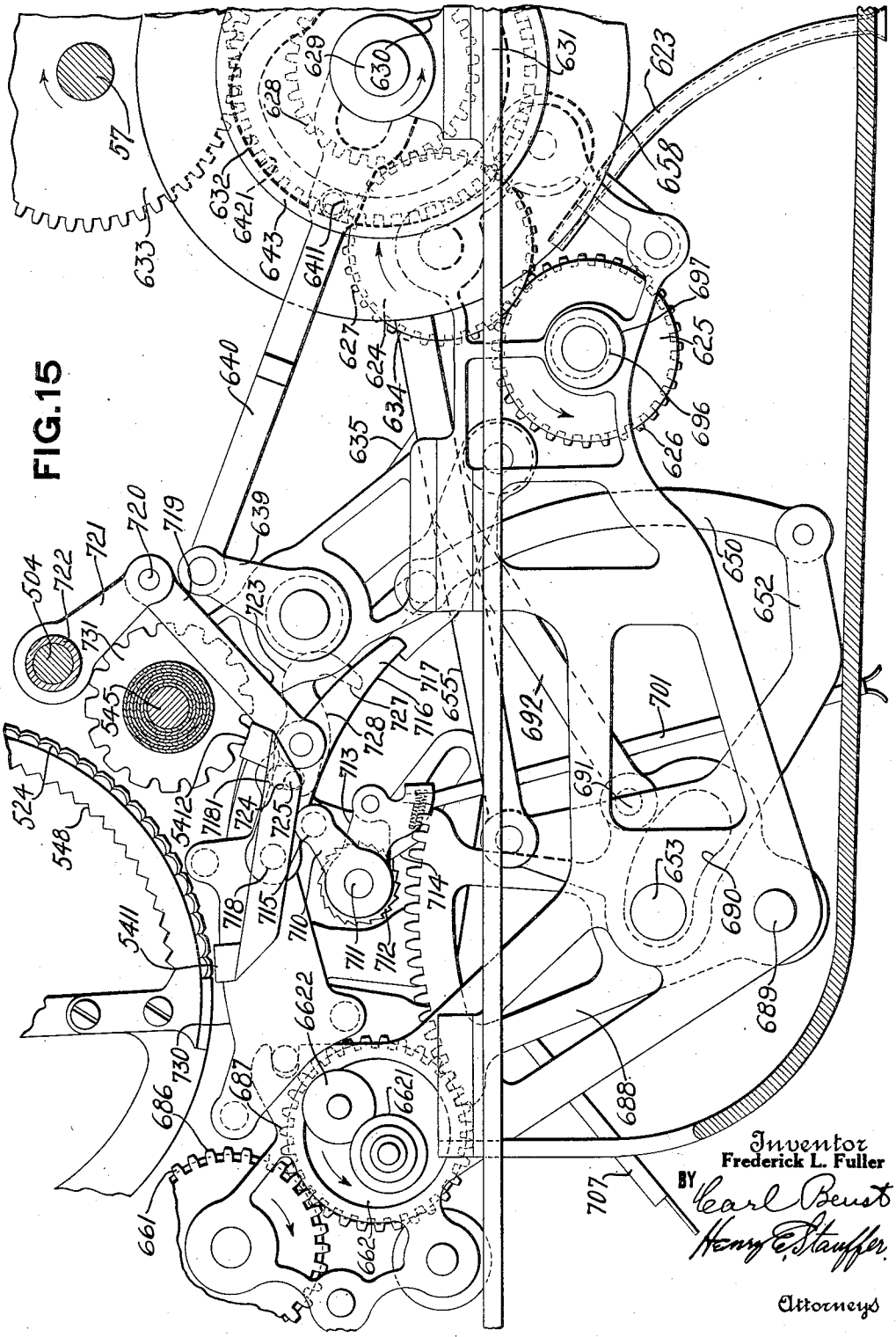

Inventor
Frederick L. Fuller
BY Pearl Beust
Henry E. Stauffer
Attorneys

Aug. 26, 1924. 1,506,055

F. L. FULLER

TICKET PRINTING MECHANISM

Original Filed March 23, 1916 13 Sheets-Sheet 9

FIG.17

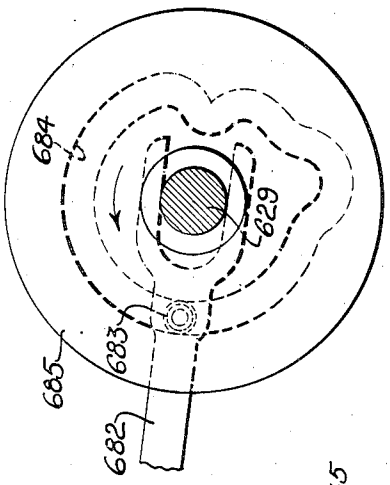

FIG.18

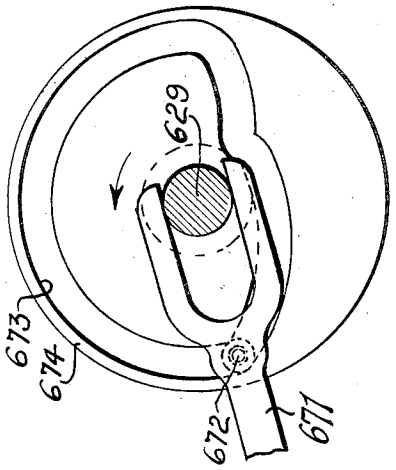

FIG.16

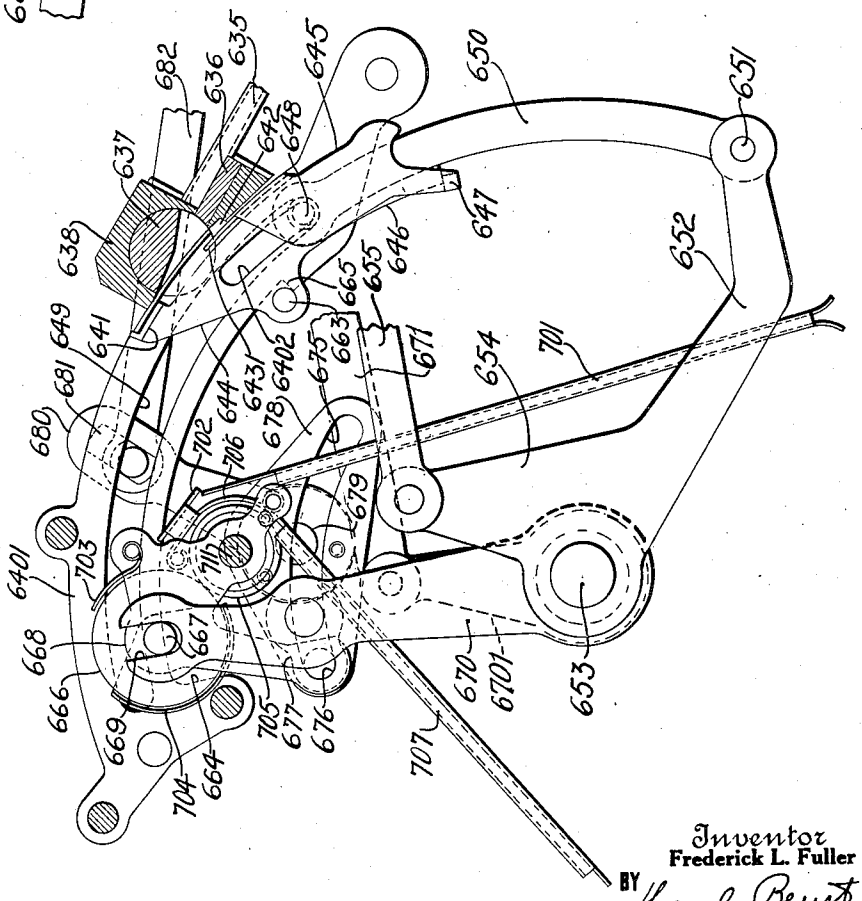

Inventor
Frederick L. Fuller

BY Pearl Beust
Henry E. Stauffer.

Attorneys

Aug. 26, 1924. 1,506,055

F. L. FULLER

TICKET PRINTING MECHANISM

Original Filed March 23, 1916 13 Sheets-Sheet 10

FIG.19

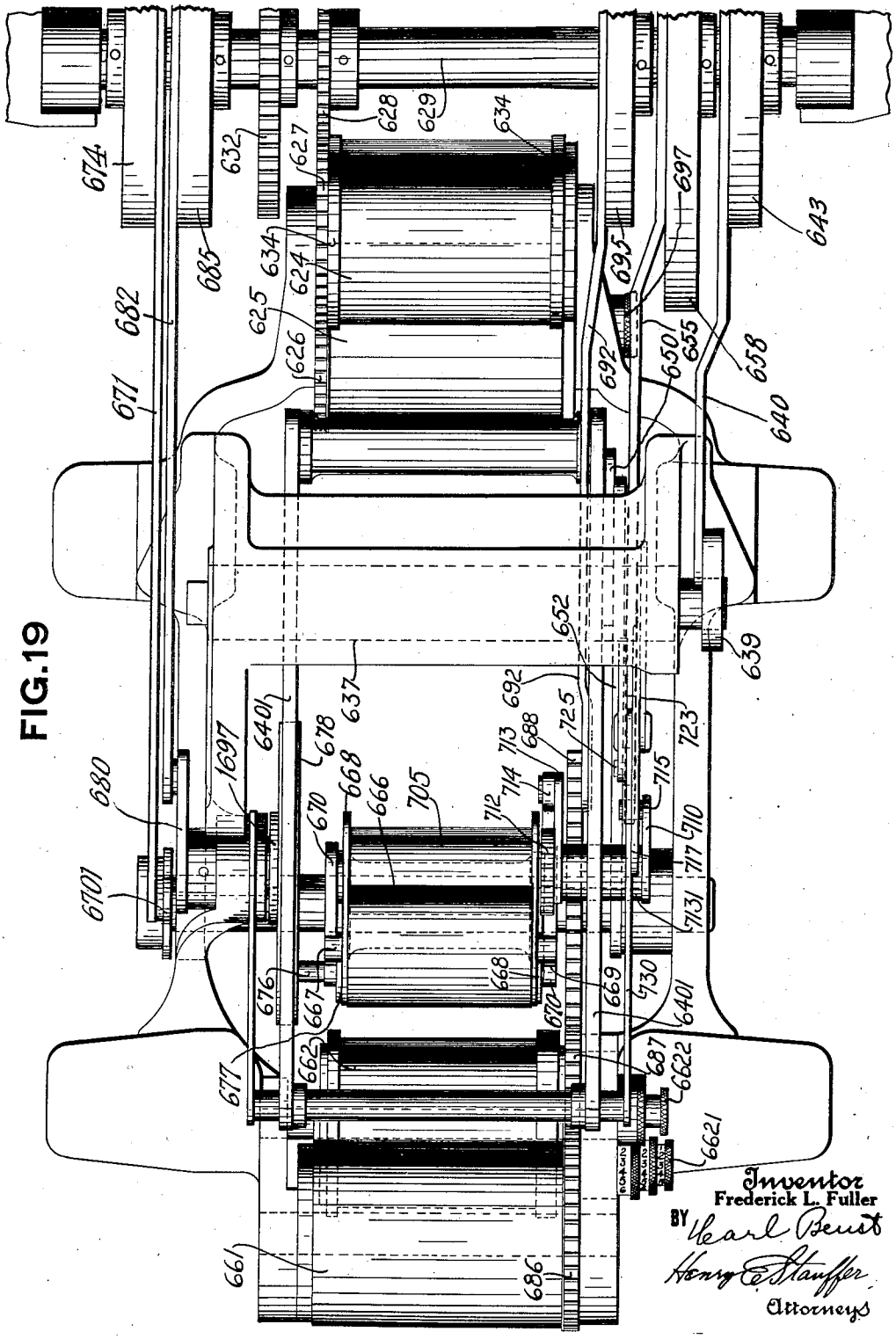

Inventor
Frederick L. Fuller
BY Earl Benet
Henry E. Stauffer
Attorneys

Aug. 26, 1924. 1,506,055

F. L. FULLER

TICKET PRINTING MECHANISM

Original Filed March 23, 1916 13 Sheets-Sheet 11

FIG. 20

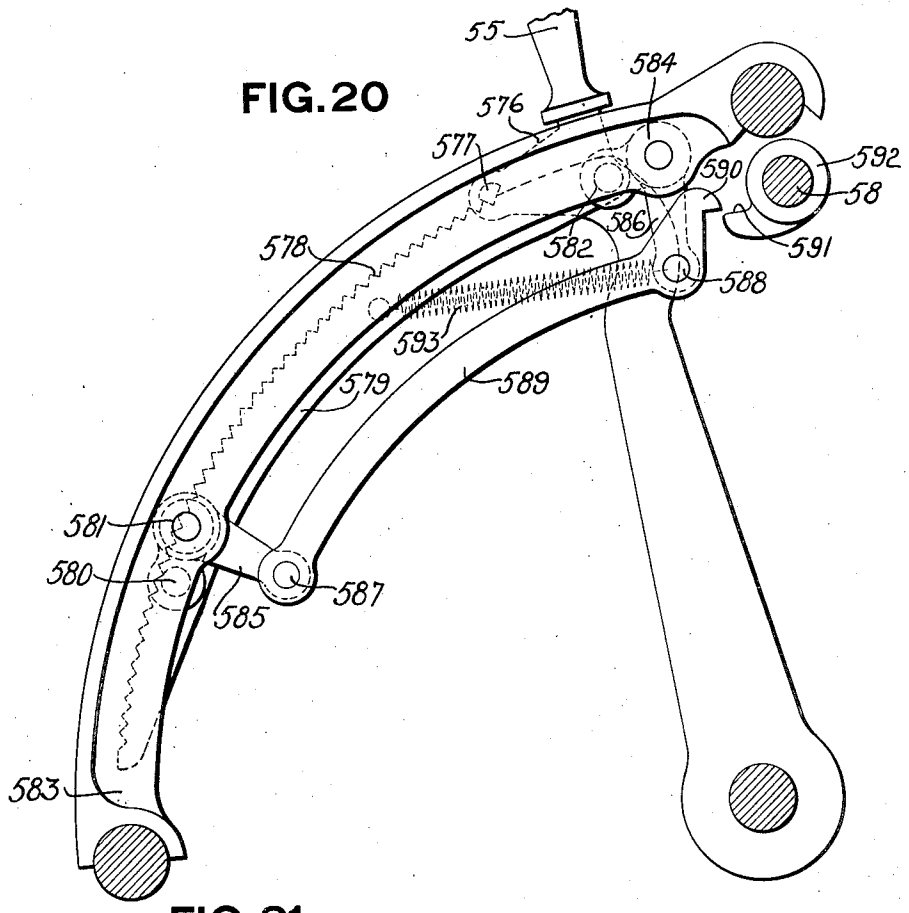

FIG. 21

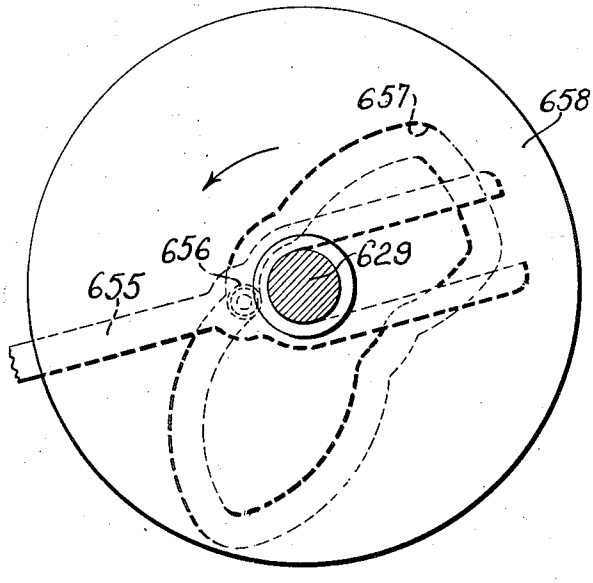

Inventor
Frederick L. Fuller
BY Pearl Benst
Henry E. Stauffer
Attorneys

Aug. 26, 1924. 1,506,055

F. L. FULLER

TICKET PRINTING MECHANISM

Original Filed March 23, 1916 13 Sheets-Sheet 12

FIG. 22

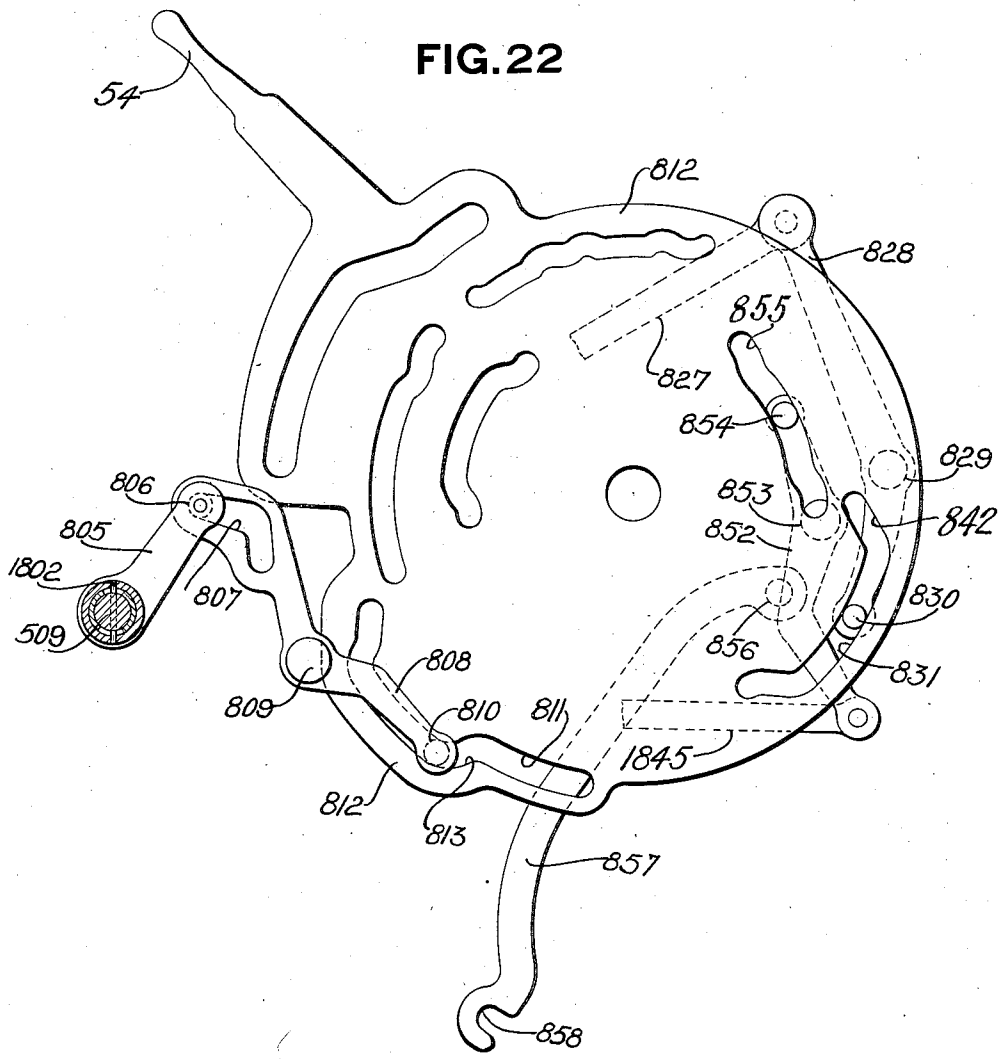

Inventor
Frederick L. Fuller
BY Pearl Bennett
Henry E. Stauffer
Attorneys

Aug. 26, 1924. 1,506,055

F. L. FULLER

TICKET PRINTING MECHANISM

Original Filed March 23, 1916 13 Sheets-Sheet 13

FIG. 23

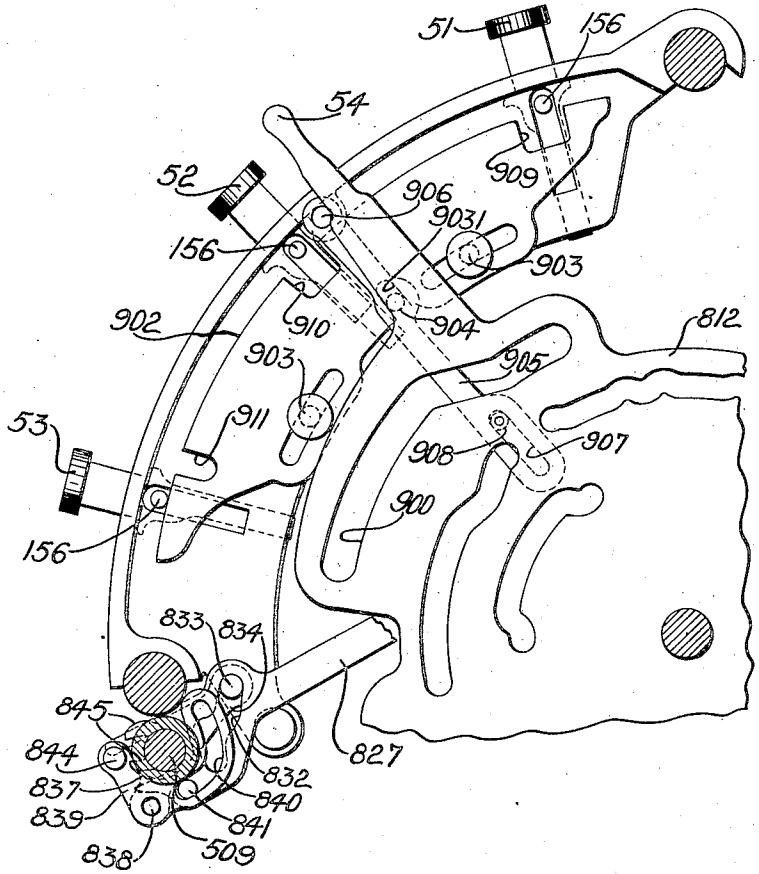

Inventor
Frederick L. Fuller
BY Pearl Beust.
Henry E. Stauffer.
Attorneys

Patented Aug. 26, 1924. 1,506,055

UNITED STATES PATENT OFFICE.

FREDERICK L. FULLER, OF ILION, NEW YORK, ASSIGNOR TO THE NATIONAL CASH REGISTER COMPANY, OF DAYTON, OHIO.

TICKET-PRINTING MECHANISM.

Original application filed March 23, 1916, Serial No. 86,088. Divided and this application filed August 13, 1921. Serial No. 491,968.

To all whom it may concern:

Be it known that I, FREDERICK L. FULLER, a citizen of the United States, residing at Ilion, in the county of Herkimer and State of New York, have invented certain new and useful Improvements in Ticket-Printing Mechanism, of which I declare the following to be a full, clear, and exact description.

This invention relates to ticket issuing machines and has more particular reference to that class of machines adapted for use in issuing tickets for railroad and steamship lines or other analogous uses.

The subject matter of the present application constitutes a division of an application of Frederick L. Fuller, Serial No. 86,088, filed March 23, 1916.

Certain of the constructions shown in the present application are not described in detail herein as it is sought to cover those constructions in the parent application and reference may be had to the same for a detailed description of those mechanisms.

The broad object of the invention is to provide a satisfactory machine for use in the ticket offices of railroads, steamship lines and similar places where it is necessary to issue and accurately account for the money received in payment for a number of different kinds of tickets. In the present instance the machine is constructed to take care of both full and half-fare tickets good between the station at which the issuing machine is located and each of a number of other stations. It will be apparent that the mechanism disclosed is capable of embodiment either in part or as a whole in machines designed to serve other purposes without departing from the broad spirit of the invention.

Another object of the invention is to provide improved means for printing upon tickets issued from a single strip the name or other information pertaining to any one of the stations to which tickets are sold. In the illustrative machine the names of the stations are printed from type carriers arranged around the periphery of a drum, in six rows of forty carriers each. This drum is arranged to be given both endwise and rotary movement, thereby making it possible to bring a type carrier in any row in position to cooperate with a ticket printing platen. Two manipulative devices are provided, one to rotate the drum and the other to shift it endwise. Either of these devices may be operated singly or both may be operated simultaneously depending upon the adjustment to be given to the drum.

After the station type carrying drum has been positioned, a device normally given an invariable extent of movement projects the selected type carrier to printing position and also locks the drum against movement. An invariably moved platen then presses the paper against the type carrier to print. One of the objects of the invention is to provide means for disabling the invariably moved platen in printing operations where it is not desired to print the name of a station.

With these and incidental objects in view, the invention consists in certain novel features of construction and combinations of parts, the essential elements of which are set forth in appended claims and a preferred form of embodiment of which is hereinafter set forth with reference to the drawings which accompany and form part of this specification.

Of said drawings:

Figs. 1^A and 1^B combined comprise a front elevation of the assembled machine with certain of the frames shown in outline.

Fig. 2 is a left side elevation of the machine with the outside casing and certain parts of the mechanism omitted.

Fig. 3 is a detail of the station type carrying drum and mechanism associated therewith.

Fig. 4 is a plan view of the station type carrying drum.

Fig. 5 is a right hand detail view of the special or controlling bank of keys and some of the mechanism immediately associated therewith.

Fig. 6 is a detail of the cam for operating the ticket severing knife.

Fig. 7 is a right hand detail of the cam for projecting the station printing type carriers to printing position.

Fig. 8 shows part of the driving mechanism.

Fig. 9 is a cross section of certain of the parts shown in Fig. 8.

Fig. 10 is a fragmentary view of the summary strip.

Figs. 11 and 12 respectively show the front and back of one of the tickets.

Fig. 13 is a right hand sectional view of the ticket numbering type carriers and connections for setting them, and mechanism controlled by the total lever for preventing station type carriers from being moved to printing position.

Fig. 14 is a detail of the cam for driving the operating segment for one of the ticket feeding and printing cylinders.

Fig. 15 is a left hand view partly in section of the ticket and summary strip printing devices.

Fig. 16 shows the platen operating mechanism, also the ticket severing and ticket delivering mechanism.

Fig. 17 is a detail view of the cam for actuating the impression platen.

Fig. 18 is a detail view of the cam for operating the platen to print from the station type carriers and from the amount and ticket numbering type carriers.

Fig. 19 is a top plan view of the printing mechanism assembled complete with the exception of the type carriers and the ticket carriage.

Fig. 20 is a detail of the lever for rotating the ticket type carrier drum and the machine locking mechanism cooperating therewith.

Fig. 21 is a detail of the cam employed for swinging the ticket carriage from one impression taking position to another.

Fig. 22 shows the total lever and mechanism controlled thereby.

Fig. 23 is a view of the special key bank and some of the total lever mechanism.

The machine shown in the drawings is, as hereinbefore stated, constructed to issue either full fare or half fare tickets good between the station at which the machine is located and any one of two hundred and forty other stations. Either one or two tickets may be issued at an operation as desired. All of the tickets are printed and severed from a single blank ticket strip. When they are delivered from the machine they have printed on their faces the usual invariable matter such as the name of the railway company, the name of the issuing station and so on. This invariable matter is printed from plates attached to one of the rolls for feeding the strip. In addition, each ticket has printed on its face the name of the destination station, a number from which the cash value of the tickets sold to said station may be ascertained, a character indicating whether the ticket is a full fare or a half fare, and the amount paid for the ticket. This additional matter is all printed from various type carriers adjusted to printing position either as a preliminary to or during a ticket issuing operation of the machine. On the back of each ticket is printed the date of issue and a consecutive number which increases by one as each ticket is issued. The date and consecutive number are printed from type carriers mounted in one of the ticket strip feeding rollers in a manner well known in the art. Said feeding roller may also have attached thereto a type carrying plate to print on the backs of the tickets any announcement or condition of sale desired.

The plates or type carriers for printing the names of the various destination stations are mounted in parallel rows partially extending around the periphery of a drum. This drum, as before stated, may be both rotated and shifted endwise on its supporting shaft to bring any desired one of the type carriers in position to print on the ticket. In addition to this the type carriers may be given a slight outward movement, to project the type carrier which is to print, far enough out of the drum to cooperate with a platen having a variable extent of impression taking movement. This outward movement of the positioned type carrier is effected by a device which is given an invariable movement at each ticket issuing operation and is constructed not only to hold the type carrier in printing position but also to lock the drum against movement until near the end of the ticket printing operation.

The parent application above referred to shows and describes two hundred and forty station totalizers and one grand cash totalizer, but it is not thought necessary to show and describe them herein as they are not directly concerned in the subject-matter claimed herein.

The printing mechanism is constructed to print tickets only during ticket issuing operations. The mechanism, however, comprises a summary strip which is printed when taking a statement from the machine, as for example, when the ticket office at which the machine is used is being checked up by the auditor. In taking the statement the machine is operated a sufficient number of times to clear each of the two hundred and forty totalizers, as described in the parent application, the name of each station and the number taken from the corresponding totalizer being printed on the summary strip. The machine is then operated again to clear the cash totalizer and print the amount on the strip. The summary strip is always in position to print but in ticket issuing operations impressions which would otherwise fall upon the strip are taken by the ticket. In taking the statement from the machine, the ticket feeding mechanism is disabled so that no ticket is fed into position to interfere with the printing of the strip. At the same time the summary strip feeding mechanism, which is always ineffective during ticket printing operations, is rendered effective so that as the station totalizers are cleared and the station

names and totals printed by successive operations of the machine the strip will be suitably spaced between the various printings.

When the total or sub-total of the amount contained in the cash totalizer is printed on the summary strip the machine must be operated with one of the station printing type carriers opposite the platen. The name of the station cannot be printed, however, as the amount of the cash total is printed in the space in which the name of the station would appear if printed. It is on this cash total printing operation that the device for projecting the station printing type carrier to printing position is disabled.

After the summary strip is printed showing the name of each of the two hundred and forty stations and the number taken from the corresponding totalizer, the auditor can ascertain the cash value of the tickets sold to each station by multiplying the number in question by the half fare rate to that particular point. The various products can then be added together and the result compared with the cash on hand and the amount printed on the strip from the cash totalizer.

The keyboard of the machine comprises four banks of amount keys 50 (Figs. 1A and 1B), a bank of special keys 51, 52, and 53 controlling a machine lock and motor connections, and a lever 54 which is usually spoken of herein as the total lever. The keyboard also comprises a lever 55 by means of which the station type carrier drum may be rotated and a handle 56 by which the drum may be shifted endwise, that is laterally of the machine. The amount keys 50 are depressed at the beginning of an operation to set up the fare or cash value of the ticket, the full fare key 51 or the half fare ticket 52 then being depressed to release the driving mechanism and control the differential operation of the units actuator for the ticket totalizer. The key 53 is operated only to release the machine lock and close the motor circuit in operations to clear ticket totalizers and print the totals on the summary strip.

Driving mechanism.

The driving mechanism comprises a shaft designated by the numeral 57 in the various figures. This shaft extends the width of the machine and is given either one or two complete rotations, depending upon the result to be obtained, by means of either a motor (not shown) or an operating handle 60. Normally, that is, in ticket printing operations, the shaft makes but a single rotation. It also makes but a single rotation in clearing each ticket totalizer and printing the total number on the summary strip, but when two tickets are to be issued and in operations to print totals or sub-totals from the cash totalizer, the shaft is permitted to make two rotations by mechanism hereinafter described.

The driving mechanism is normally locked against movement and the motor circuit held open by mechanism controlled by a rock shaft 58 (Fig. 8). This mechanism is not shown or described herein, as it is fully shown and described in Letters Patent of the United States No. 1,242,170, granted to F. L. Fuller, the present applicant, on August 9, 1917. It is sufficient to state that upon operation of a special key or adjustment of the lever 54 to certain positions, latching mechanism is disabled by movement of a plate 69 (Fig. 5) permitting the shaft 58 to be rotated a short distance clockwise (Fig. 8) by a spring 59, thereby releasing the driving mechanism and closing the motor circuit. The spring 59 acts through an arm 61 fast on the shaft 58 to oscillate the shaft an extent limited by a stud 62 on said arm and the upper end of a slot 63 in a plate 64. This plate also has a bayonet slot 65 through which projects a stud 66 on the rear end of an arm 67 pivoted at 68 to the side frame of the machine. On the arm 67 is a roller 71 projecting into a cam groove 72 formed in the side of a gear 73 rotatably mounted on a stud 74 projecting from the machine frame. The gear 73 meshes with a gear 75 fast to the driving shaft 57, and is twice the diameter of said gear 75 so that for each rotation of the driving shaft 57 the gear 73 makes half of a rotation. Near the end of each half rotation of the gear 73 the plate 64 is reciprocated by the cam groove 72 and arm 67, first downward and then back to original position. On account of the engagement of the upper end of the slot 63 with the stud 62 the shaft 58 will be rocked slightly counterclockwise beyond the normal position in which it is shown in Fig. 8, the purpose being to restore the machine locking mechanism to effective condition, and to release depressed keys as hereinafter explained.

When the driving mechanism is to operate twice the plate 64 is drawn forward so that the portion 81 of the slot 65 is in alinement with the stud 66 during the first half of a rotation of the gear 73 in which position the shaft 58 is not moved. Shortly after the first half rotation is completed the plate 64 is restored to its original position so that the movement imparted to the arm 67 during the second half of the rotation of the gear 73 will rock the shaft 58 backward as above explained to lock the driving mechanism against further movement and incidentally to release any depressed keys. The connections whereby the plate 64 is moved to effect the results stated will be described later.

Amount differential and station totalizer differential.

The four banks of amount keys 50 (Fig. 1B) control differential mechanism which is illustrated and described in the parent application and also in Letters Patent of the United States No. 1,230,864 granted to W. A. Chryst on June 26, 1917.

The differential mechanism for operating the two hundred and forty ticket totalizers is located to the left of the amount keys 50 and is described in the parent application.

These two differential mechanisms are not illustrated and described herein and reference may be had to said application for a description thereof.

Station printing type carriers.

The type carries for printing the names of the various stations are as best shown in Figs. 3 and 4, mounted in a drum 520 located in the lower front (Fig. 2) of the machine. The drum has a spline and groove connection 522 with a tube 523 rotatably supported at its ends by the frames of the machine. The purpose of the spline and groove connection between the tube and drum is, of course, to provide means whereby the drum may move endwise on the tube but relative rotation of the drum and tube is prevented. The station printing type carriers 524 are mounted in six rows of forty type carriers each, the rows extending substantially half way around the periphery of the drum. In ticket issuing operations the drum is moved endwise on the tube 523 to bring the row containing the type carrier which is to print above a printing platen and is rotated by turning the tube 523 to bring said type carrier into printing position.

Rotative movement is imparted to the tube and drum by movement of the handle or lever 55 (Fig. 2). Rigid with the lever is a toothed segment 526 meshing with a gear 527 fast to a short shaft 528 journalled in the adjacent machine frame. Attached to the other end of the shaft is a gear 529 meshing with a larger gear 530 journalled on a stud 531 carried by the machine frame. This gear 530 in turn meshes with a gear 532 fastened to the left end of the tube 523. The lever 55 is adjustable to forty different positions and this movement, through the intermediate gearing described, permits corresponding adjustment of the type carrier drum 520.

The endwise movement of the drum 520 along the tube 523 is imparted by means of the handle 56 (Figs. 3 and 4). This handle is rigidly secured to the rectangular frame 237 previously mentioned. The frame is slidably mounted on the tube 523 and a rod 536. Said rod is provided with six notches 537, one for each position to which the drum may be adjusted laterally and the handle 56 has a manually operable spring latch 538 to cooperate with these notches and thereby secure exact lateral alignment of the drum as a preliminary to the operation of the machine.

The station name printing type carriers 524 are in the form of bars having their bases resting against the periphery of the drum. Each of the type bars has a small yoke 541 of approximately the same length as the type bar. The side portions of these yokes are fastened to the type bars and extend through openings in the periphery of the drum. Compressed between the cross plates of the yokes 541 and the periphery of the drum are springs 542 serving to hold the type bars in normal position, that is, against the drum. In printing operations the positioned type carrier is projected from the periphery of the drum so that only the carrier which is to print will be in position to cooperate with the printing platen.

The device for projecting the type carriers is in the form of a yoke, the cross bar 543 of which extends through the drum above the printing line. The side arms 544 of the yoke are fastened to a rock shaft 545 and are far enough apart on the shaft to permit endwise movement of the drum to any of the six positions. The cross bar has a portion 546 on its lower edge to engage the yoke 541 of the type bar which is to be projected and also has slots 547 to engage the side plates 548 of the drum. The bottoms of the slots 547 are beveled to engage notches formed in the plates 548. The arrangement is such that when the bar 543 is depressed the positioned type carrier will be projected from the drum and the drum locked against both endwise and rotary movement.

The shaft 545 is normally rocked at each operation of the machine but this is prevented by disabling the operating connections on cash total and sub-total printing operations. In order to rock the shaft 545, an arm 5481 attached to the shaft has loosely connected thereto a link 549 (Figs. 3 and 13). The rear end of the link 549 is pivoted on a stud 550 on an arm 551 loose on the shaft 418. The stud 550 is normally engaged by a hook 553 on a link 554 pivoted at 555 to a bell crank 556, loose on a stud 428. The other arm of the bell crank 556 carries an anti-friction roller 558 (Fig. 7) projecting into a cam groove 559 formed in the side of the disk 484 attached to the driving shaft 57. The shape of the cam groove is such that at the beginning of an operation the bell crank 556 will be rocked counter-clockwise (Fig. 13) thereby swinging the bar 543 (Fig. 3) down to project the positioned type carrier to printing position and lock the drum 520. The bell crank 556 is not returned to its original position

until just at the end of the rotation of the shaft 57 so that the type carrier remains projected and the drum locked for substantially the entire rotation of the driving shaft. In cash total and sub-total taking operations the hook 553 is disengaged from the stud 550. As a result, the bar 543 will not be moved down and no type carrier 524 will be projected to print. The manner in which the hook is disengaged will be described later.

Mechanism is provided whereby if either the lever 55 or the handle 56 is at an intermediate position, operation of the machine will be prevented and an operation of either will be prevented during an operation of the machine. This machanism for the lever 55 is shown in Fig. 20. Rigid with the lever is an arm 576 carrying a stud 577 suitably shaped to cooperate with teeth 578 in the outer edge of a plate 579. This plate is supported at its lower end by a pin 580 carried by an arm of a bell crank 585 pivoted at 581 to the frame 583. At its upper end the plate 579 is similarly supported at 582 on a bell crank 586 pivoted at 584. Pivoted at 587 and 588 to the bell cranks 585 and 586 respectively is a bar 589 having a shoulder 590 to cooperate with a shoulder 591 formed on a collar 592 attached to the rock shaft 58. This shaft it will be recalled controls the latching mechanism and in order to release the mechanism for the machine to operate the shaft must rotate in a clockwise direction as viewed in Fig. 20. As the lever 55 is moved from one position to another the stud 577 will ride over the points of the teeth 578 thereby depressing the plate 579 and swinging the arms 585 and 586 and the bar 589 upward against the tension of a spring 593 to carry the shoulder 590 over the shoulder 591 and thereby prevent the releasing movement of the rock shaft 58. As the stud 577 passes into one of the notches between teeth 578, the spring 593 will withdraw the shoulder 590 so that the shaft 58 will be free to rock.

The devices whereby the machine is locked against operation if the handle 56 is not correctly set are shown in Figs. 3 and 5. Attached to the rear of the frame 237 is a cross bar 601 having a tooth 602 for each of the six lateral positions of the frame, each tooth, when the frame is in the corresponding position, resting against a roller 603 on an arm 604 rigid with a sleeve 605 loose on the shaft 509. Near its right hand end the sleeve 605 (Fig. 5) carries a yoke 607, carrying a stud 608. As the frame 237 is moved away from one of its six lateral positions the tooth 602 will be carried out of contact with the roller 603 and a spring 609 will rotate the sleeve 605 and yoke 607 to carry the stud 608 down to the rear of a tail 610 formed on a supporting arm 84 for a temporary locking detent 82 of the special key bank. It is clear that this will prevent depressing any of the special keys until the frame 237 is again in one of the six positions where a tooth 602 will be effective to hold the stud 608 up out of the path of the tail 610.

Printing mechanism.

The printing mechanism is located in the base of the machine and comprises mechanism for printing tickets and feeding them through a slot 621 (Figs. 1^A and 1^B) and mechanism for printing a summary strip which is fed out through a slot 622.

The ticket strip passes from a supply roll (not shown) up through a guide 623 (Fig. 15) and between feeding rollers 624 and 625. The left hand ends of these two rollers are equipped with intermeshed gears 626 and 627 the latter meshing with a gear 628 attached to a short shaft 629 journalled in upwardly extending portions 630 formed on the printer frame 631. Attached to the shaft 629 is a large gear 632 meshing with a gear 633 fastened to the driving shaft 57. The construction is such that for each rotation of the driving shaft 57 the two rollers 624 and 625 will be given a complete rotation. The roller 624 has flanges 634 which cooperate with the roller 625 to feed the ticket strip the distance required for a single ticket. Positioned on the periphery of the roller 624 and between the flanges 634 is an electrotype which prints on the faces of the tickets the name of the railroad company and other invariable matter such as the name of the station at which the machine is located.

From between the rollers 624 and 625 the ticket strip passes through a second chute or guide 635 (Fig. 16) over a stationary knife 636 and under a knife 637, rotatably mounted in a stationary frame 638. Rigidly attached to the right hand end of the knife 637 is an arm 639 (Figs. 15 and 19) connected to a pitman 640 slotted to engage the shaft 629 and carrying an antifriction roller 6411 projecting into a cam groove 6421 (Figs. 6 and 15) formed in the side of a disk 643 fastened to the shaft 629. The groove 6421 is so shaped as to draw the pitman 640 rearward as soon as the ticket has been fed by the rollers 624 and 625, thereby severing a ticket from the ticket strip.

As the ticket strip is fed over the knife 636 its forward end is guided on to a table 641 (Fig. 16) forming a part of a carriage for swinging the ticket back and forth between the position where the name of the station to which the ticket is issued is printed and the position where the amount and ticket numbers are printed. As the knife 637 is rotated and the ticket severed, the knife carries the rear edge of the ticket down in front of a lug 642 formed on a table 6431 which is also a part of the ticket carriage. The

tables 641 and 6431 are formed respectively on plates 644 and 645. The plate 644 has a tail 646 which normally rests against a shoulder 647 formed on the plate 645. The plate 645 is pivoted on a stud 648 attached to the upper end of a link 650 and extending through a slot 6402 in the plate 644 and a slot 649 in a stationary guiding plate 6401. The lower end of the link 650 is connected at 651 with an arm of a bell crank 652 pivoted on a rod 653. To the other arm 654 of the bell crank a pitman 655 is connected. This pitman is slotted to engage the shaft 629 and carries a roller 656 (Fig. 21) projecting into a cam groove 657 formed in the side of a disk 658 fastened to the shaft 629. The shaft 629 makes a complete rotation in a counter-clockwise direction (Fig. 21) at each operation of the machine and the cam groove 657 is so shaped that during the forepart of the operation, the link 650 will be given an upward thrust, thereby swinging the carriage comprising plates 644 and 645 forward far enough to bring the ticket in position to receive an impression from the station printing type carrier at the station printing line 5411 (Fig. 15). The ticket carriage is then swung back part of the way toward its first position so as to bring the ticket in position to receive an impression from the amount and consecutive number type carriers at their printing line 5412. After the impression last mentioned is taken, the carriage is again swung toward the front. This movement, which is greater than the first forward movement, is to release the ticket from the carriage and engage it with rollers 661 and 662 which are then rotated to feed the ticket on out of the machine. The ticket is released from the swinging carriage by moving the tail 646 (Fig. 16) out of engagement with the shoulder 647 on the plate 645 so that movement of the plate 645 relative to the plate 644 is permitted. During this relative movement, the block 642 pushes the ticket forward into engagement with the rollers 661 and 662. The tail 646 is disengaged from the shoulder 647 by a stud 663 on the plate 644 coming in contact with a portion 664 of the stationary guiding frame. When the stud strikes the portion mentioned, the tail 646 is swung up out of engagement with the stud 647 and the plate 644 is held stationary during the final movement of the link 650 and plate 645 to engage the ticket with the rollers 661 and 662. When the bell crank 652 and link 650 are returned to the starting point the stud 648 will engage the lower end of the slot 6402 and draw the plate 644 along. A stop 665 on the guiding plate 6401 will, during the final movement of the link 650, contact the stud 663 and swing the tail 646 back into engagement with the shoulder 647.

Impressions from the station type carriers and the amount and number type carriers are taken by a platen 666 (Figs. 16 and 19) fastened to a shaft 667, journalled in side plates 668 with the ends of the shaft resting in open slots 669 in the upper ends of arms 670 fast on a shaft 653. Pivoted to an arm 6701 also fast on the shaft 653 is a pitman 671 (Figs. 16 and 18), slotted to straddle the shaft 629. The pitman carries a roller 672 projecting into a cam groove 673 in a disk 674 rigid on the shaft 629. The groove 673 is so formed as to swing the arms 670 rearward shortly after the shaft 629 has completed the first half of its rotation. By this time the ticket carriage will have carried the ticket to the printing line 5411 and back again to the printing line 5412 of the amount and number printing type carriers. The arms 670 are then swung back to their original position.

When the ticket carriage is swung forward to the printing line 5411, the platen 666 is raised to take an impression from the projected type carrier 524. When it is swung rearward into position to cooperate with the printing line 5412, the platen is again raised to print on the ticket the amount and ticket number. These impression taking movements of the platen are imparted by a plate 678 having a slot 675 cooperating with a stud 676 forming a pivotal connection between one of a pair of plates 668 in which the platen shafts 667 is journalled and a small arm 677 which is in turn pivoted to one of the arms 670. Rigid with the plate 678 is a plate 1697 secured to a shaft 679 carrying an arm 680 having an adjustable connection 681 supporting the forward end of a pitman 682. The pitman 682 carries an anti-friction roller 683 (Fig. 17) cooperating with a cam groove 684 in a cam disk 685 fast to the shaft 629. The groove 684 is so shaped as to rock the arm 680 and plate 678 twice, the first time in a clockwise direction (Fig. 16) to raise the platen against the station printing typecarrier and the second time in a counter-clockwise direction to raise the platen against the amount and number printing type carriers.

In the foregoing it was stated that when the tail 646 of the ticket carriage plate was disengaged from the shoulder 647, the plate 645 continued its movement, thereby causing the block 642 to push the ticket into engagement with the feeding rollers 661 and 662. The roller 662 is a dating and numbering cylinder such as is fully shown and described in U. S. Letters Patent 541,247, issued June 18, 1895, to W. Murphy. Such cylinders have been used in cash registers for many years and need no detailed description here. It is sufficient to state that the roller 662 contains the usual dating and numbering type carriers and knobs 6621 and

6622 respectively for setting the date wheels and turning the consecutive numbering wheels to zero. After the ticket is in engagement with the rollers 661 and 662, the rollers are rotated, thereby causing the consecutive number and date to be printed on the back of the ticket, further movement of the rollers feeding the ticket out through the slot 621 in the base of the machine. In order to feed the tickets, the rollers 661 and 662 are provided with intermeshed gears 686 and 687 respectively. Meshing with the gear 687 is a segment 688 pivoted to the printer frame at 689 and having a slot 690 to clear the rod 653. Pivotally connected to the segment 688 at 691 is a pitman 692. This pitman carries a roller 693 (Fig. 14) cooperating with a cam groove 694 in a disk 695 fast to the shaft 629. The cam groove is shaped first to draw the segment rearward slightly so as to impart a slight reverse movement to the rollers 661 and 662 and is then given a forward thrust to rock the segment 688 and impart feeding and printing movement to the rollers. The segment 688 is then returned to its normal position.

In order to make it possible to prevent the tickets from being fed in summary strip printing operations, the feeding roller 625 is mounted on an eccentric 696 (Fig. 15) which may be turned by means of a knob 697 to move the roller 625 out of feeding relationship with the roller 624. This construction is well known in the art. The summary strip, which, it will be remembered is printed only in taking a statement from the machine, passes from a supply roll, not shown, up through a guide 701 (Figs. 15 and 16), under guides 702 and 703, around the platen roller 666, through a guide 704 and between the platen roller 666 and a feeding roller 705. The strip then passes through a guide 706 into a delivery chute 707. It is apparent that the summary strip is raised at each time the platen 666 is given an impression taking movement and that the strip would be printed upon at every operation of the machine if it were not for the fact that in ticket printing operations, the printing falls upon the tickets which are interposed between the strip and the type carriers.

The strip is fed out of the machine by rotating the feeding roller 705. For this purpose the shaft 711, to which the feeding roller 705 is attached, is provided with ratchet 712 (Figs. 15 and 19). Loosely mounted on the shaft 711 is a plate 713 to which is pivoted a spring pressed pawl 714 cooperating with the ratchet 712. Rigid through the medium of a sleeve 7131 with the plate 713 is an arm 710 carrying a stud 715 normally cooperating with the curved edge 716 of an arm 717 pivoted as at 718 to an auxiliary frame 730. Pivoted to the side of the arm 717 is a link 719 connected at 720 to an arm 721 fast on a tube 722 on the shaft 504. Pivoted to the stationary plate 730 (Figs. 15 and 19) is a hooked arm 723, the forward end of which has a slot 724 engaging a stud 725. This stud is attached to the side of the arm 717 and projects through a slot 7181 in the frame 730 into the slot 724. In preparing the machine for summary strip printing operations, the total taking lever 54 will, through connections explained later, rock the tube or sleeve 722 counter-clockwise (Fig. 15) and thereby swing the arm 717 up out of engagement with the stud 715. This movement of the arm 717 will cause the stud 725 to swing the arm 723 down to position the nose 727 thereof in the path of the stud 715. When the platen arms 670 are swung rearward to amount and number printing position, the stud 715 will engage the nose 727 and swing the arm 710 and plate 713 counter-clockwise about the shaft 711. During this counter-clockwise movement, the pawl 714 will ride idly over ratchet 712. As the platen carrying arms 670 return to their forward position the stud 715 will be carried along the cam edge 728 and the arm 710 and plate 713 will be rotated about the shaft 711, thereby causing the pawl 714 to turn ratchet 712 and roller 705 to feed the summary strip.

The amount type carriers 731 and the ticket number printing type carriers 734 are shown in Figs. 15 and 13 respectively. However, the mechanism for positioning these type carriers is not shown and described herein, and reference may be had to the parent application for said description.

As before pointed out, in operations to print cash totals or sub-totals on the summary strip, the mechanism for projecting the station type carrier 524 which is at the time in printing position is disabled. The reason for this is that in printing amounts on the summary strip, the amounts fall in the space where the name of the station would otherwise appear. It is apparent that on the other hand the amount type carriers must be prevented from printing on the strip in all summary taking operations to list the names of the stations and the numbers taken from their respective totalizers. This is effected by turning the amount type carriers backward from zero so as to present blank portions at the printing line, as was fully illustrated and described in the parent application.

Total lever and controlling mechanism.

The total lever 54 and most of the controlling mechanism associated therewith is fully shown and described in the Fuller patent previously referred to and only those features of this mechainsm which are directly involved in the present invention

will be explained in detail here. In Figure 1B the lever 54 is shown at the single ticket issuing position. In this position the totalizer selected by adjustment of the lever 55 and handle 56 is actuated to add one or two, depending on whether the half fare key 52 or the full fare key 51 is depressed. If the lever 54 is adjusted to the "Double" position, the machine operates twice, each of the operations being the same in every respect as the operation at the "Single" position of the lever. The mechanism for controlling the double operation will next be described.

The position of the plate 64 (Fig. 8) it will be recalled, controls the restoring of the rock shaft 58 and latch mechanism controlled thereby, the plate when in the position shown in Figure 8, restoring the shaft at the end of each rotation of the driving shaft, while if the plate is drawn forward at its lower end so as to bring the portion 81 of the slot 65 in position to receive the stud 66 when the arm 67 is operated, the shaft 58 will not be restored at the end of the first rotation of the driving shaft but will be restored near the end of the second rotation.

To permit two rotations of the driving shaft 57, the total lever 54 controls mechanism shown in Figures 8 and 9. This mechanism includes a pitman 783 pivotally connected to an arm 784 loose on the shaft 509. The pitman is provided with a slot 785 surrounding the stud 74 on which the gear 73 is mounted, the slot being provided to permit endwise movement of the pitman. The pitman carries a pin 786 engaging a slot 787 in the plate 64. A roller 788 carried by the pitman is normally seated in an offset 789 in a cam grove 790 formed in a disk 791 loosely mounted on the stud 74. The disk 791 is normally not connected to the gear 73 but its left hand side is seated in a circular depressed portion 792 in the right hand face of the gear. A plate 793 is slidably mounted in a groove 794 formed in the left hand face of the disk 791, the plate having a slot through which the stud 74 projects. The forward end of the plate is provided with a lug 795 normally projecting towards the right between two pins 796 projecting laterally from the left hand side of the pitman 783. When the parts are in the normal position shown, one of two offsets 797 of the circular depressed portion 792 of the gear 73 will be opposite the forward end of the plate 793. This is the position of the parts when the lever 54 is at either the "Single" position or the "Ticket totalizer reset" position.

When the lever is adjusted to the "Double" position the pitman 783 is drawn forward, thereby through the studs 796, drawing the plate 793 forward into the one of the recesses 797 which is at the time in position. This latches the cam disk 791 to the gear 73 so that the two will rotate as a unit. Shortly after the gear 73 begins to turn, the cam groove 790, acting against the roller 788, will drive the pitman 783 forward, bringing the portion 81 of the slot 65 in the plate 64 under the stud 66 on the arm 67. Then when the arm 67 is operated near the end of the first rotation of the driving shaft 57, the restoring plate 64 will not be disturbed. Shortly after the second rotation of the driving shaft 57 begins, the cam groove 790 will move the pitman 783 and plate 64 rearward to their original positions, so that when the arm 67 is again operated the plate 64 will be moved downward and the rock shaft 58 will be restored.

The mechanism for first moving the pitman 783 and plate 64 forward comprises an arm 801 (Fig. 8) formed on sleeve 802 (Fig. 22), having a slot and pin connection 1802 with the shaft 509 to permit a slight movement of the sleeve independent of the shaft. The arm 801 carries a stud 803 projecting through a slot 804 in the right hand machine frame and forming a rigid connection between the arm 801 and the arm 784. The sleeve 802 has a second arm 805 carrying a stud 806 projecting into a cam slot 807 in the upper end of a lever 808 pivoted at 809 to the machine frame. At its lower end the lever 808 carries a stud 810 projecting into a cam slot 811 formed in a disk 812 rigid with the total lever 54. In Figure 22 the lever 54 is shown at the normal or "Single" ticket issuing position. If the lever 54 is raised to the next higher or "Double" position, a cam portion 813 of the slot 811 will be brought into contact with the stud 810, thereby swinging the lever 808 counterclockwise (Fig. 22) and causing the cam slot 807 in the lever to rock the arm 805, element 802 and arm 801 in a clockwise direction. This through the connection afforded by the stud 803 will rock the arm 784 in clockwise direction (Fig. 8) to latch the disk 791 and gear 73 together and thereby during the first rotation of the driving shaft bring the portion 81 of the slot in the plate 64 under the stud 66. The cam slot 807 in the lever 808 is long enough and properly shaped to prevent interference with the additional movement of the element 802 as next described.

When the pitman 783 (Fig. 8) is reciprocated by the cam 790 as above described to move the plate 64, the arm 784 and the element 802 rigid therewith are of course given a rocking movement. This, however, does not disturb the shaft 509 in operations with the lever 54 at the "Double" position because of the slot and pin connection 1802. The shaft must, however, be rocked on cash total and subtotal printing operations, that

is, when the lever 54 is swung either to the top or bottom positions. (See Fig. 1B). The reason for this is that shaft 509 has attached thereto mechanism which is called into play on these operations as shown and described in said parent application.

In order to cause the shaft 509 to rock in cash subtotal and total printing operations means is provided for latching the shaft and sleeve 802 together so that when the sleeve is rocked by operation of the pitman 783 the movement will be imparted to the shaft. This means comprises a link 827 (Fig. 22) slotted at its forward end to engage the shaft 509 and pivoted at its rear end to a lever 828 pivoted on a stud 829 attached to the adjacent machine frame and carrying a roller 830 projecting into a slot 831 in the disk 812 forming a part of the lever 54. Near its forward end the link 827 (Figs. 22 and 23) is provided with a slot 832 receiving a stud 833 fast on an arm 834 secured to the shaft 509. Rigid with the arm 834 is a small arm 837 carrying a stud 838 on which is loosely mounted a plate 839 having a slot 840 receiving a stud 841 on the link 827. When the lever 54 is swung to either the top or bottom position, one or the other of the portions 842 of the slot 831 (Fig. 22) will be carried into engagement with the stud 830, thereby rocking the lever 828 on its pivot 829 and drawing the link 827 toward the rear of the machine. As the link moves rearward, the stud 841 (Fig. 23) will rock the element 839 to move a stud 844 thereon between two ears 845 formed on the sleeve 802. The slot 832 will at the same time act against the stud 833 to rock the arm 834 of the shaft 509 to an extent corresponding to the movement given the sleeve 802 by the cam slot 807 in the arm 808. Then when the element 802 is rocked by the pitman 783, the shaft 509 and all the parts attached thereto will move as a unit. As shown in Figs. 22 and 23, the slots 832 and 840 are long enough and are suitably shaped to prevent any interference during this unitary movement of the shaft 509 and the element 802.

When the lever 54 is swung to either the top or bottom position, the rock shaft 58 is released and the machine permitted to operate just as though one of the special keys had been depressed. This is effected in substantially the same way as described in the Fuller patent by depressing the plate 69 (Fig. 5). For operating this plate by movement of the lever 54 there is provided a link 1845 pivoted at its forward end to an arm 846 journalled on the shaft 509. Rigid with the arm 846 is a second arm 847 carrying a stud 848 engaging a shoulder 849 on an arm 850 extending downward from the plate 69. At its rear end the link 1845 (Fig. 22) is pivotally connected to a lever 852 pivoted at 853 and carrying a stud 854 projecting into a slot 855 in the disk 812. The slot 855 is so formed that when the lever is swung to either the top or bottom position, the lever 852 will be swung clockwise thereby thrusting the link 1845 forward (Fig. 5) and swinging the stud 848 downward to lower the plate 69 and permit the rock shaft 58 to release the driving mechanism and close the motor circuit. The operation of the links 1845 and 827 are so timed with reference one to the other that the shaft 509 will have been latched to the element 802 before the detent 69 is lowered to release the machine.

Pivoted at 856 (Fig. 22) to the side of the disk 812 is a link 857. At its lower end the link is provided with a notch 858 to engage a stud 859 (Fig. 13) carried by an arm 860 fast to the shaft 418. This shaft has fastened thereto a cam plate 778 and a cam plate 871. The cam plate 778 has a slot 861 receiving a stud 862 on an arm 863 attached to the sleeve 722. This sleeve, it will be recalled, carries the arm 721 for operating the arms 717 and 723 (Fig. 15) controlling the feeding of the summary strip. The slot 861 is so shaped that when the lever 54 is lowered to the "Reset ticket totalizer" position, the portion 864 of the slot will be in engagement with the stud 862, thereby raising the rear end of the lever 863 and rocking the sleeve 722 in the proper direction to render the strip feeding mechanism effective. The cam plate 871 (Fig. 13) is near the left hand side of the machine and controls the operation of the bar 543 for projecting the station type carriers to printing position and locking the station type carrier drum against movement. Formed in the cam plate 871 is a cam slot 872 engaging a stud 873 attached to the side of a bell crank 874 pivoted on a stud 875 attached to the machine frame. The rear arm 876 of the bell crank has a stud 877 extending through a slot 878 in the link 554. The slot 872 is so formed that when the lever 54 is swung to either the top or the bottom position, the bell crank 874 will be rocked counterclockwise (Fig. 13) thereby raising the forward end of the link 554 to disengage its hook 553 from the stud 550. The stud 877 will support the link 554 in this disconnected position, so that when the link is reciprocated by the bell crank 556 and cam 559, the arm 5481 and consequently the shaft 545 will not be disturbed. In order to prevent the shaft 545 from being accidently displaced while the link 554 is disconnected, the forwardly extending arm of the bell crank 874 is provided with a stud 881 which will engage a notch 882 formed in the upper edge of link 549. This will lock the link 549, arm 5481 and shaft 545 against movement until the bell crank 874 is returned to its original position.

Mechanism is provided for preventing operation of the full fare key 51 and the half fare key 52 when the total lever 54 is at the "Reset ticket totalizer" position and for preventing operation of the releasing key 53 except when the lever 54 is at the "Reset ticket totalizer" position. This mechanism is shown in Fig. 23. It comprises a plate 902 slidably mounted on studs 903 fastened to the special key bank frame. In the inner edge of the plate 902 is a notch 9031 engaging a stud 904 projecting from the link 905 pivoted to the key frame at 906. At its lower end the link has a slot 907 surrounding a stud 908 fastened to the side of the disk 812. In the outer edge of the plate 902 are cuts 909, 910 and 911 cooperating respectively with the pins 156 in the keys 51, 52 and 53. The cuts 909 and 910 are so positioned and are of sufficient width to permit depression of the keys 51 and 52 when the lever 54 is at either the "Single" or the "Double" position. The cut 911 is just wide enough and is so positioned that it is only brought into position under the pin in the key 53 when the lever 54 is set at the "Reset ticket totalizer" position. It is, of course, apparent that none of the three keys can be operated when the lever 54 is swung to its extreme upper or lower position, the machine then being released directly by movement of the lever operating the special key detent as hereinbefore described.

Operation.

In operating the machine to issue tickets the total lever 54 is adjusted to either the "Single" or the "Double" position depending upon whether one or two tickets are wanted. At the "Single" position, the driving mechanism has a single cycle of operation and issues one ticket while at the "Double" position of the lever the driving mechanism has two cycles of movement during each of which a ticket is printed and delivered through the slot 621 at the front of the machine. The handle 56 is then moved laterally to shift the station type carrying drum 520 to position the desired row of station type above the platen. The lever 55 is then adjusted with reference to the scales on the front of the machine until the point on the lever is opposite the horizontal line containing the name of the destination station. This movement of the lever rotates the station type carrying drum 520 to bring the proper type carrier 524 in position to print. The amount keys 50 are then operated to set up the price of a single ticket. The order in which the total lever 54, the lever 55 and handle 56 and the amount keys 50 are operated is not essential as in ticket printing operations they can be adjusted in whatever sequence is convenient. In fact, as before stated, the lever 55 and handle 56 may be simultaneously operated to select the station type carrier and ticket totalizer.

After the various conditions have been set up by operation of the other manipulative devices either the full fare key 51 or the half fare key 52 is depressed. This releases the lock for the driving mechanism and also closes the motor circuit in case the machine is electrically driven.

The tickets are drawn from a strip by feed rolls 624 and 625 which normally grip the paper, the former roll carrying an electro-type for printing the name of the railroad, the name of the issuing station and other invariable matter on the face of the ticket. From the feeding rolls mentioned the strip passes through a chute 635 (Fig. 16) over a stationary knife 636 and under a movable knife 637 into a carriage composed of formed plates 644 and 645. These plates are capable of a relative movement but this movement is normally prevented by a tail 646 on the plate 644 engaging a shoulder 647 on the plate 645. After the ticket is deposited in the carriage, the carriage is swung to bring the ticket under the printing line 5411 (Fig. 15) to have printed thereon the name of the destination station and is then swung back to the printing line 5412 where the number and price are printed. The ticket carriage is then again swung forward past the printing line 5411 far enough for a stud 663 on the plate 644 to strike the portion 664 of a fixed frame 6401. This will disengage the tail 646 from the shoulder 647 and permit the plate 645 to move relative to the plate 644 and cause a block 642 on the frame to push the ticket out of the carriage and forward into engagement with the rollers 661 and 662. These rollers are then rotated to feed the ticket out of the slot 621 in the front of the machine and as they are rotated the roller 662 prints the date and consecutive number on the back of the ticket.

In taking a statement from the machine, the name of each of 240 destination stations and the number taken from the corresponding station totalizers is printed on the summary strip. After all the station totalizers have been cleared and their numbers printed the cash totalizer is operated to print either the sub-total or total at the bottom of the strip. In preparing the machine for printing the summary strip the eccentric 696 (Fig. 15) is rotated by means of the knob 697 to move the feeding roller 625 away from the roller 624 so that the ticket strip will not be fed. The lever 54 is then adjusted to the "Reset ticket totalizers" position. This movement of the lever, among other things, will move the arm 717 up and the hooked arm 723 (Fig. 15) down so as to operate the arm 710 for turning the summary strip feeding roller 705. Then at each operation of the machine the arm 710 will be

oscillated so that the spring pressed pawl 714 pivoted on an arm 713 rigid with the arm 710 will actuate the feeding roller, this roller cooperating with the platen 666 to draw the strip from the usual supply roll.

After the ticket feed has been disabled and the mechanism for feeding the summary strip rendered effective the motor key 53 is depressed to unlock the driving mechanism and close the motor circuit. This causes the ticket totalizer which is at the time in effective position to be cleared and the number printed on the summary strip. It is apparent that by proper adjustment of handle 55 and lever 56 the two hundred and forty ticket totalizers may be operated successively until they are all cleared and their numbers printed, the motor key 53 being depressed after each selecting adjustment of the lever 55 and handle 56.

When it is desired to print a sub-total from the cash totalizer the lever 54 is swung to the top or "Read" position and when the totalizer is to be cleared and the amount printed it is swung to the lowest or "Reset" position. As a preliminary to this the ticket feed must of course be disabled if this has not already been done, but positioning the lever to either the "Read" or "Reset" position will render the summary strip feeding mechanism effective. In cash totalizer reading and resetting operations none of the special keys can be operated, all of the work of releasing the machine and closing the motor circuit being performed by the lever.

While the form of mechanism herein shown and described is admirably adapted to fulfill the objects primarily stated, it is to be understood that it is not intended to confine the invention to the one form herein shown but that it is susceptible of embodiment in various forms all coming within the scope of the claims which follow.

What is claimed is:—

1. In a machine of the class described, the combination of a printing platen, a drum mounted for endwise and rotative movement, a plurality of printing devices mounted in parallel rows on the periphery of the drum, independent manipulative means for rotating the drum and moving the drum endwise, said manipulative means being operable singly or simultaneously to bring any desired printing device into position to cooperate with the platen.

2. In a machine of the class described, the combination of a printing platen, a drum mounted for endwise and rotative movement, a plurality of parallel rows of station printing type carriers mounted on the periphery of the drum, manipulative means for rotating the drum, manipulative means for moving the drum endwise, the two manipulative means being operable singly or simultaneously to bring any desired type carrier into position to cooperate with the platen.

3. In a machine of the class described, the combination of a plurality of type carriers, means for projecting any desired type carrier into position to print, manipulative means for disabling said means when desired, and a platen operable to take impressions from the carriers in printing position.

4. In a machine of the class described, the combination of a plurality of type carriers, means for moving any desired type carrier to a common position, an invariably moved platen, means for projecting the positioned type carrier into position to cooperate with the platen, and manipulative means for disabling the means last mentioned when desired.

5. In a machine of the class described, the combination of a plurality of type carriers, means for moving any desired type carrier to a common position, a platen, means normally having an invariable movement for projecting the positioned type carrier into position to cooperate with the platen, and manipulative means for disabling said last mentioned means when desired.

6. In a machine of the class described, the combination of a plurality of groups of type carriers, means for bringing any carrier in any group to a position common to all of the carriers, an invariably moved platen, means for projecting the positioned type carrier into position to cooperate with the platen, and manipulative means for disabling said last mentioned means when desired.

7. In a machine of the class described, the combination of a plurality of groups of type carriers, a movable support for the carriers, means for moving said support to position a plurality of the type carriers at a printing line, means for projecting from said line the type carrier which is to be printed from, and a platen having an invariable impression taking movement for taking impressions from the projected type carrier.

8. In a machine of the class described, the combination of a plurality of groups of type carriers, a movable support for the carriers, means for moving said support to position a plurality of type carriers at a printing line, means for projecting from said line the type carrier which is to be printed from, manipulative means for disabling said means when desired, and a platen movable to take impressions from the projected type carrier.

9. In a machine of the class described, the combination of a movable support, a plurality of type carriers carried by and movable relative to the support, an invariably moved device for moving the type carrier in operative relation therewith relative to the support to printing position, means for adjusting the support to position any desired type carrier in operative relationship with

the invariably moved device, an invariably moved platen for taking impressions from the type carrier in printing position, and manipulative means for disabling the invariably moved device.

10. In a machine of the class described, the combination of a type carrier supporting drum mounted for sliding movement in the direction of its axis, a plurality of type carriers mounted in said drum, a frame surrounding said drum, a platen, and means on said frame for sliding said drum to bring the platen and a type carrier into printing relation.

11. In a machine of the class described, the combination of a type carrier supporting drum mounted for sliding movement in the direction of its axis, a plurality of type carriers normally held in non-print position in said drum, and means operable to project a carrier into printing position in any adjusted position of said drum.

12. In a machine of the class described, the combination of a type carrier supporting drum movably mounted for selecting a type carrier for printing, type carriers normally in non-print position supported by said drum, manipulative means for moving said drum, impression means cooperating with the face of said type carriers, and means for operating said impression means and for projecting a selected type carrier into printing position.

13. In a machine of the class described, the combination of an adjustable type carrier supporting member, impression means, normally locked operating means for actuating said impression means, means for releasing said operating means, and means preventing an operation of said releasing means while said supporting member is moved from one position to another.

14. In a machine of the class described, the combination of an adjustable type carrier supporting member, a member carried thereby provided with high and low points, type carriers supported in said member, impression means therefor, operating means for the impression means, and releasing means for said operating means involving an arm adapted to cooperate with a high point on said member when said member is adjusted to establish a printing relation between a type carrier and said impression means.

15. In a machine of the class described, the combination of an adjustable type carrier supporting member, impression means, an operating mechanism, manipulative releasing means, a rockable release shaft under control of said manipulative means, and obstructions adapted to be moved into position to prevent a rocking movement of said release shaft as said supporting member is moved from one position of adjustment to another.

16. In a machine of the class described, the combination of an adjustable type carrier supporting member, impression means, an operating mechanism, manipulative releasing means, a detent actuable by said releasing means for releasing the machine, and an obstruction adapted to be moved into position to prevent movement of said detent as said supporting member is moved from one position of adjustment to another.

17. In a machine of the class described, the combination of a slidable and rotatable printing drum, impression means cooperating therewith, means for operating the impression means, a releasing means for said operating means, and means operable during sliding and rotatable adjustments of said drum to prevent release of said operating means while said drum is being slid and rotated from one position of adjustment to another.

18. In a machine of the class described, the combination of a rotatable and slidable printing drum, type carriers in non-print position in said drum mounted to be projected into printing position, and means for alining said drum in adjusted position and for projecting said type carriers into printing position.

19. In a machine of the class described, the combination of a rotatable printing drum, type carriers in non-print position in said drum mounted to be projected into printing position, and means for alining said drum in adjusted position and for projecting said type carriers into printing position.

20. In a machine of the class described, the combination of a slidable printing drum, type carriers in non-print position in said drum mounted to be projected into printing position, and means for alining said drum in adjusted position and for projecting said type carriers into printing position.

21. In a machine of the class described, the combination of a hollow printing drum, type carriers in non-print position therein adapted to be projected into printing position, a pivoted yoke-shaped member mounted with its cross member within the drum in position to project a selected type carrier into printing position, and means for operating said member.

22. In a machine of the class described, the combination of a hollow rotatable printing drum, type carriers in non-print position therein adapted to be projected into printing position, a pivoted yoke-shaped member mounted with its cross member within the drum in position to project a

selected type carrier into printing position, and means for operating said member.

23. In a machine of the class described, the combination of a hollow slidable printing drum, type carriers in non-print position therein adapted to be projected into printing position, a pivoted yoke-shaped member mounted with its cross member within the drum in position to project a selected type carrier into printing position, and means for operating said member.

24. In a machine of the class described, the combination of a hollow rotatable and slidable printing drum, type carriers in non-print position therein adapted to be projected into printing position, a pivoted yoke-shaped member mounted with its cross member within the drum in position to project a selected type carrier into printing position, and means for operating said member.

25. In a machine of the class described, the combination of a hollow adjustable printing drum, a pivoted yoke-shaped alining member mounted with its cross member within the drum, and means for operating said aliner to hold said drum in adjusted position.

26. In a machine of the class described, the combination of a hollow rotatable printing drum, a pivoted yoke-shaped alining member mounted with its cross member within the drum, and means for operating said aliner to hold said drum in adjusted position.

27. In a machine of the class described, the combination of a hollow slidable printing drum, a pivoted yoke-shaped alining member mounted with its cross member within the drum, and means for operating said aliner to hold said drum in adjusted position.

28. In a machine of the class described, the combination of a hollow slidable and rotatable printing drum, a pivoted yoke-shaped alining member mounted with its cross member within the drum, and means for operating said aliner to hold said drum in adjusted position.

In testimony whereof I affix my signature.

FREDERICK L. FULLER.