H. ROLLE.

PENCIL SHARPENER.

APPLICATION FILED NOV. 8, 1910.

997,741.

Patented July 11, 1911.

3 SHEETS—SHEET 1.

Fig. 1

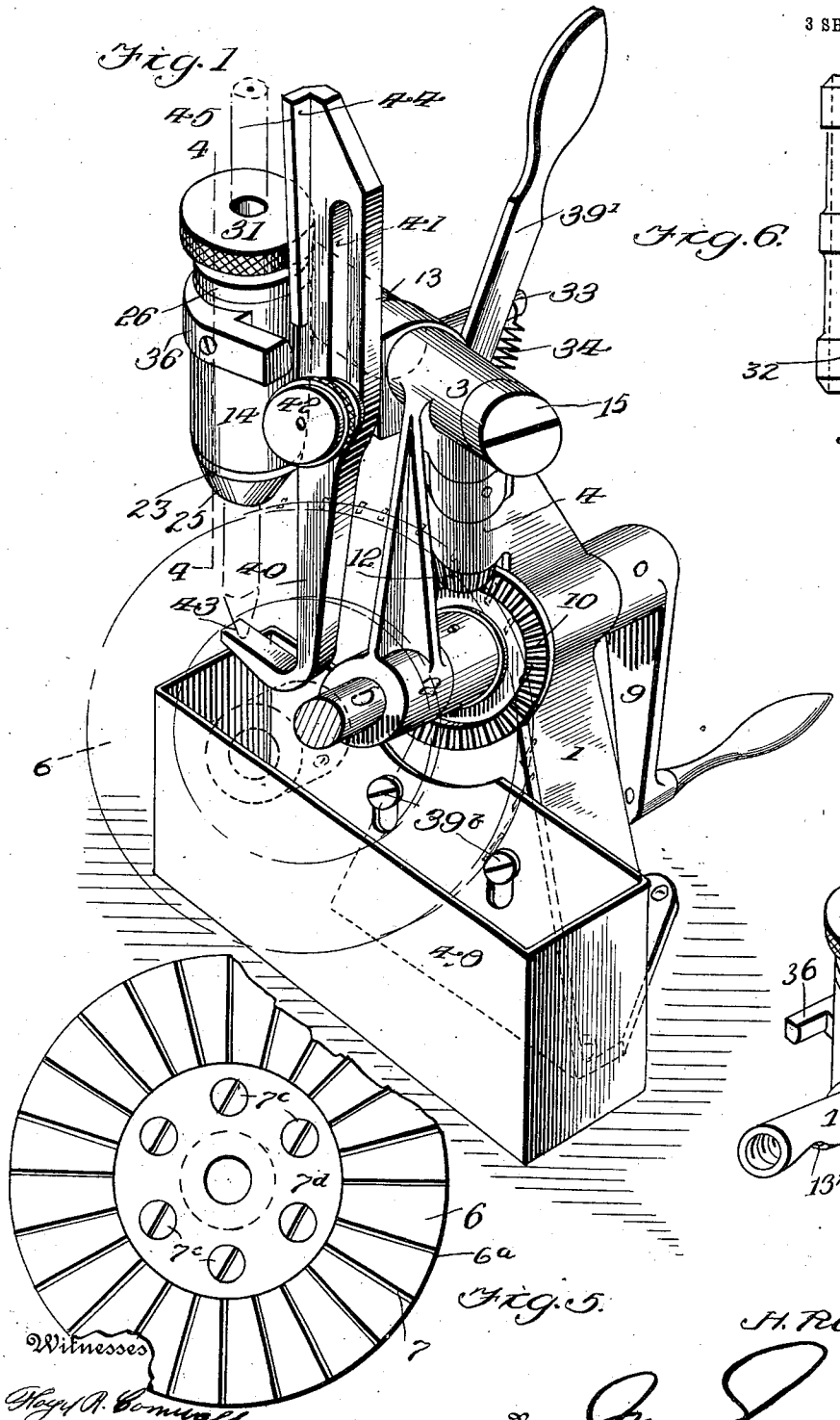

Fig. 6.

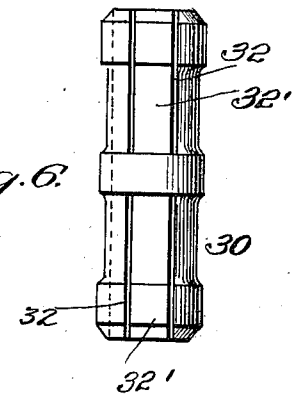

Fig. 11

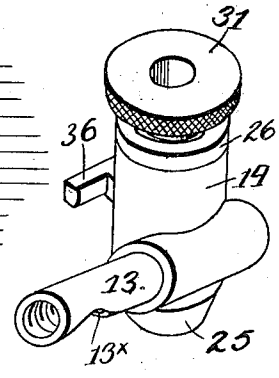

Fig. 5.

Witnesses

Hugh A. Connell.

J. H. Bailey

Inventor

H. Rolle.

By John Ingle

Attorney

H. ROLLE.

PENCIL SHARPENER.

APPLICATION FILED NOV. 8, 1910.

997,741.

Patented July 11, 1911.

3 SHEETS—SHEET 2.

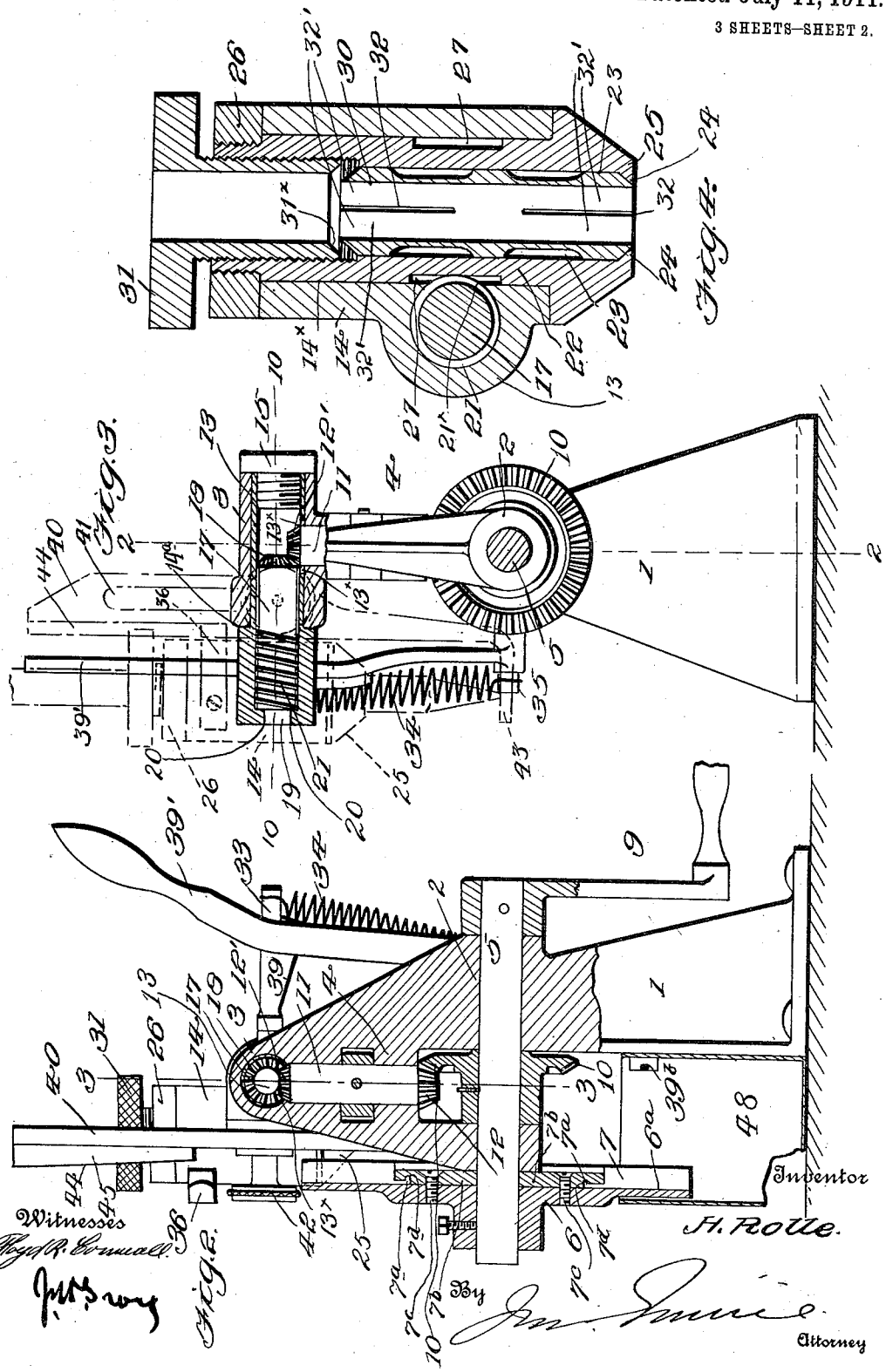

COLUMBIA PLANOGRAPH CO., WASHINGTON, D. C.

H. ROLLE.

PENCIL SHARPENER.

APPLICATION FILED NOV. 8, 1910.

997,741.

Patented July 11, 1911.

3 SHEETS—SHEET 3.

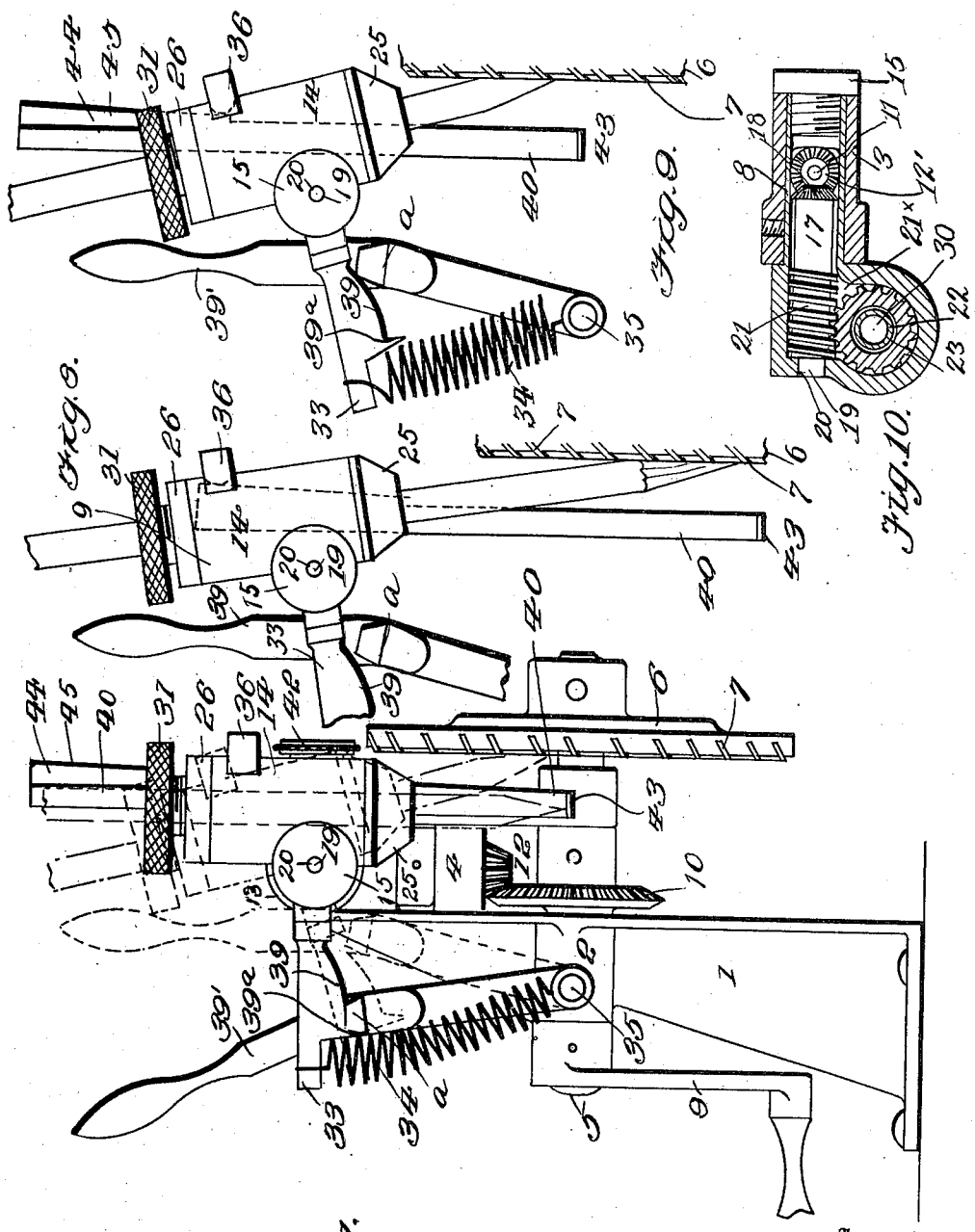

Witnesses

Floyd R. Cornwall.

J. H. Drury

Inventor

H. Rolle.

By

Attorney

COLUMBIA PLANOGRAPH CO., WASHINGTON, D. C

UNITED STATES PATENT OFFICE.

HERMAN ROLLE, OF PHILADELPHIA, PENNSYLVANIA, ASSIGNOR OF ONE-HALF TO H. S. ADAMS, OF PHILADELPHIA, PENNSYLVANIA.

PENCIL-SHARPENER.

997,741. Specification of Letters Patent. Patented July 11, 1911.

Application filed November 8, 1910. Serial No. 591,345.

To all whom it may concern:

Be it known that I, HERMAN ROLLE, a citizen of the United States, residing at 213 South Sixty-first street, Philadelphia, in the county of Philadelphia and State of Pennsylvania, have invented certain new and uesful Improvements in Pencil-Sharpeners; and I do hereby declare the following to be a full, clear, and exact description of the invention, such as will enable others skilled in the art to which it appertains to make and use the same, reference being had to the accompanying drawings, and to letters or figures of reference marked thereon, which form a part of this specification.

This invention relates to improvements in pencil sharpeners.

The object of the invention is to provide a movable yielding pencil holder with means for gradually revolving the pencil in the presence of a plurality of rapidly revolving cutting blades.

A further object of the invention is to provide means for adjusting the pencil, whereby the length of the taper for the point may be lengthened or shortened.

A further object of the invention is to arrange the parts to provide a simple, economical, and practical pencil sharpener.

The invention also relates to the specific details of construction and arrangement of parts which will be hereinafter described, and particularly pointed out in the claims.

In the drawings: Figure 1 is a perspective view of my improved pencil sharpener, the cutting disk being shown in dotted lines. Fig. 2 is a vertical section on the line 2—2, Fig. 3. Fig. 3 is a transverse section on the line 3—3, of Fig. 2. Fig. 4 is an enlarged detail section of the barrel on the line 4—4, Fig. 1. Fig. 5 is a face of the cutting disk. Fig. 6 is a detail view of the chuck. Fig. 7 is a side elevation, showing the barrel tilted in dotted lines. Fig. 8 is a diagrammatic view illustrating the manner of adjusting the parts to make a long cut and for limiting the movement of the pencil holder after a point has been formed. Fig. 9 is a similar view but showing the position of the parts for making a short cut. Fig. 10 is a detail horizontal section on the line 10—10, of Fig. 3. Fig. 11 is a detail perspective view of the barrel.

1, indicates a standard to support the operating mechanism, and it is provided with transverse bearings 2, a longitudinal bearing 3, and a vertical bearing 4. A main shaft 5, is mounted in the transverse bearings 2, and it has secured at one end a disk 6, provided with a plurality of cutting edges or blades 7, and at its opposite end with a crank handle, 9. Fixed on the shaft 5, intermediate the bearings 2, is a beveled gear wheel 10. Mounted in the vertical bearing 4, is a shaft 11, provided at its lower end with a beveled pinion 12, which meshes with the beveled gear wheel 10, and on the upper end of the vertical shaft is a beveled pinion 12′. Mounted in the transverse bearing 3, and having a slight revolving movement therein, is the reduced end of a sleeve 13, projecting from a barrel 14 formed with a central opening 14ˣ. Adjacent the reduced portion of the sleeve is a shoulder, which engages one end of the bearing 3, and the sleeve is further provided with internal screw threads. A screw 15, engages the latter threads and its head engages the outer end of the bearing 3, and holds the sleeve in the latter. Mounted in the sleeve is a shaft 17, formed on one end with a beveled pinion 18, which meshes with the beveled pinion 12′, and at its opposite end it is formed with a trunnion 19, fitting in an opening 20 in the end of the sleeve. The shaft of the pinion 12′ extends through a slot 13ˣ in the sleeve 13, said slot permitting of the sleeve being slightly turned in the bearing for a purpose to be described. The shaft 17, is provided with a worm 21, the periphery of which passes through an opening 21ˣ, between the enlarged portion of the sleeve and the central opening 14ˣ, in the barrel, to engage a worm gear on a revolving stem 22, mounted in the barrel.

The stem 22, is provided with a centrally disposed opening 23, having an internal flange 24, at its lower end, and it is provided with a flanged beveled head 25. The upper end of the stem is threaded to receive a nut 26, which with the flanged head 25, holds the stem in position in the barrel. The stem is provided with a worm gear 27, with which the worm 21, on the shaft 17, meshes whereby to impart motion to the stem from the main shaft.

Seated in the opening 23 in the stem and supported on the flange 24, is a chuck member 30, confined in the opening by a screw 31. The chuck member 30, is formed with

several bearing surfaces which engage the walls of the opening 23, and extending from the opposite ends of the chuck are slots 32, to provide a series of yielding fingers 32′ to engage a pencil and hold it in position to be sharpened by the cutting edges. The ends of the chuck are beveled, the lower bevel being seated on the flange 24, while the lower beveled end 31ˣ of the screw 31 is designed to engage the upper bevel. When the screw 31 is forced down on the chuck it locks the latter to the sleeve, to cause the pencil to turn therewith when the device is in operation.

Extending from the barrel is a stud 33, to which is secured a spring 34, the opposite end being attached to a stud 35, projecting from the frame. The tension of the spring holds the barrel in an inclined position with reference to the disk, so that when a pencil is inserted in the chuck, it will be yieldingly held in contact with the cutting edges. A lug 36 extends from the barrel, and engages a pencil support, to limit the movement exerted by the spring. The bottom of the stud 33 is provided with a cam surface 39, at the outer end of which is a stop 39ᵃ. A lever 39′ is pivotally mounted on the stud 35 and it has a lug *a*, which engages the cam to rock the barrel against the tension of the spring 34, the said stud abutting against the stop 39ᵃ, to limit the outward movement of the lever.

Secured to the front of the frame is an adjustable pencil support 40, formed with a slot 41, through which passes a threaded pin, engaged by a nut 42. The lower end of the support is provided with an extension 43 designed to form a rest for the lower end of a pencil. On the front face of the pencil support, is a flange 44, the edge of which is inclined as at 45 and with which the lug 36, coöperates to gage the limit of movement of the barrel to obtain the proper taper on the pointed end of a pencil.

Extending from the standard 1, are screws 39ᵇ, to secure a receptacle 48, in which the shavings and fine lead are caught when the sharpener is in operation.

The disk is provided with a series of angularly disposed slots 6ᵃ, to receive the blades. Each blade is formed at its inner end with a projection 7ᵃ, and a clamp 7ᵇ, having a seat 7ᵈ, to receive the projections 7ᵃ, is secured by means of screws 7ᶜ, to the face of the disk. By this construction the blades may be conveniently replaced if broken, or for re-sharpening.

To operate the pencil sharpener the lever 39′ is rocked outwardly, so that the lug *a*, engaging the cam 39 will rock the lower end of the barrel away from the disk. When the barrel is rocked it also rocks the sleeve in the bearing 3, the slot 13ˣ, permitting of such movement at the point where the beveled pinion 12′ is located. When the barrel is rocked the worm gear 27 moves in the grooves of the worm 21. A pencil is now thrust into the chuck, and the fingers frictionally grip it. The lower end of the pencil rests on the extension 43 and the nut 31 is tightened which engages the chuck and as both ends of the latter are beveled, it tightly grips the pencil and locks it to the sleeve. This having been done, the lever 39′, is rocked toward the disk, and by reason of the shape of the cam 39 the spring 34 will rock the barrel until the lower end of the pencil is brought into the plane of the cutting blades, and is held in this position under the tension of the spring. The pencil is slowly revolved, because of the worm and worm gear, while the disk carrying the cutting edges is very rapidly revolved, and as the spring holds the pencil in yielding contact with the disk, it will be obvious that any irregular surfaces on said pencil will not subject the parts to undue strain or stop the operation of the disk, nor will the cutting edges of the latter sever unusually large shavings from the end of the pencil. The disposition of the center of the barrel, and the plane of the disk with the cutting edges, will shave the end of the pencil to a point. By the construction described the end of the pencil is constantly held in the path of the cutting edges, and is constantly, but slowly, revolved while the disk is in motion. By this means the wood is gradually and evenly shaved, and a point is quickly made. The taper of the flange 44 is so proportioned with reference to the extension 43 that the lug 36 will contact with the flange 44 only at the time the point on the lead of the pencil has been made. By this construction the cutting blades will not act on the point to further shave it, neither will said blades bear on the lead and break it. When the lug 36 strikes the flange 44 the parts, as stated are so proportioned after the point on the lead is completed, further revolving of the cutters will not act on the lead. This feature of my invention I regard as important as it prevents breaking of the pencil or under wearing away of the same. The pencil having been sharpened, the lever 39′, is rocked outwardly again, which movement by reason of the cam, rocks the barrel and brings the pencil over the extension. The screw is now released and the pencil is withdrawn from the chuck.

The invention is extremely simple, and positive in operation, and by reason of the specific arrangement of the parts is not liable to become out of order.

Claims.

1. In a pencil sharpener, the combination of a frame, a rocking barrel mounted in the frame, a sleeve mounted in the barrel and having a worm, a chuck member supported

in the sleeve, a worm gear engaging the worm, gears for operating the worm gear, a revolving cutter, and a spring for holding a pencil supported in the chuck against the revolving cutter, a rocking lever formed with a lug, and a cam extending from the barrel, the lug engaging the cam to rock the barrel against the tension of the spring to move the pencil away from the cutting blades.

2. In a pencil sharpener, the combination of a frame, a sleeve mounted in the frame and having a barrel at one end, means for holding the sleeve within the barrel on the frame, a revolving sleeve supported in the barrel, a screw cap for holding the sleeve in the barrel, a chuck mounted in the latter sleeve and adapted to receive and hold a pencil supported in the barrel, a shaft provided with a handle, a revolving disk secured to the shaft, a plurality of detachable blades mounted on the disk, a gear on the shaft, a second shaft having a gear meshing with the aforesaid gear, gearing between the latter gears and the sleeve in the barrel, and a spring for holding a pencil held by the chuck against the blades.

3. In a pencil sharpener, the combination of a frame provided with a horizontal bearing, a sleeve mounted in the bearing, a barrel on the end of said sleeve, a shaft mounted in the sleeve, a beveled pinion on the shaft, a worm gear on the shaft, a flanged sleeve mounted in the barrel, said flanged sleeve having a worm with which the worm gear meshes, a chuck having yielding fingers and loosely mounted in the flanged sleeve, a threaded element for holding the chuck in the flanged sleeve, a disk having a plurality of cutting blades, a spring for holding the end of a pencil supported in the chuck under tension against the cutting blades, a handle, and gears between the handle and the beveled gear for rapidly revolving the disk and slowly revolving the pencil.

4. In a pencil sharpener, the combination of a frame, having a bearing, an internally threaded sleeve mounted in the bearing, a screw engaging the threads of the sleeve to retain same in place in the bearing, a barrel on the sleeve, a flanged threaded sleeve mounted in the barrel, a nut engaging the threaded portion of the flanged sleeve which with the flange holds said flanged sleeve in the barrel, a worm on the flanged sleeve, a shaft mounted in the first mentioned sleeve, said shaft having a beveled gear and a worm gear, the latter meshing with the worm on the flanged shaft, a hollow chuck loosely supported in the flanged sleeve, said chuck having a plurality of spring fingers, a hollow nut engaging the threads in the flanged sleeve to retain the hollow chuck in position, said nut adapted to engage the chuck to spread the spring fingers to lock it in the sleeve, a revolving cutter mounted on the frame, gears between the revolving cutter and the beveled gear on the shaft, and a spring for holding the end of a pencil supported in the chuck under tension against the revolving cutter.

5. In a pencil sharpener, the combination of a frame, a revolving disk having a plurality of cutting blades, a tilting pencil holder mounted on the frame and including a chuck, a spring for normally tilting the lower end of the pencil holder to position it in the presence of the cutting blades, a train of gears including a worm between the disk and the chuck, whereby to simultaneously revolve the cutter and the chuck at different speeds, the spring permitting of the tilting of the barrel for the insertion of a pencil in the chuck, whereby when the pencil is released the spring will hold the end under tension in the presence of the cutting blades, a rocking lever formed with a lug, and a cam extending from the barrel, the lug engaging the cam to rock the barrel against the tension of the spring to move the pencil away from the cutting blades.

6. In a pencil sharpener, the combination of a frame, a shaft mounted in the frame, a disk having a series of angularly disposed slots and mounted on the shaft, a plurality of blades fitting in the slots, each blade having a projection at its inner end, a clamp plate formed with a seat to receive the projections of the blade, means for securing the clamp plate to the disk, a tilting pencil holder, located beyond the periphery of the disk, a spring for holding the pencil holder under tension when a pencil is in position and its end is in the path of the blades, and gears for rapidly revolving the disk and slowly revolving the pencil holder.

7. In a pencil sharpener, the combination of a frame, a revolving disk having a plurality of cutting edges on its face, a tilting pencil holder including a chuck mounted on the frame beyond the periphery of the disk, a spring for normally holding the end of the pencil holder adjacent the periphery of the disk away from the latter, said spring when a pencil is in position in the chuck to be sharpened holding the end of said pencil under tension in the presence of the cutting edges, gears for rapidly revolving the disk and slowly revolving the chuck, an adjustable pencil support for engaging the length of the cut of the point of the pencil, means for limiting the movement of the pencil holder after the point has been made on the pencil, and means for simultaneously adjusting the pencil support and the limiting means.

8. In a pencil holder, the combination of a frame, a rocking holder including a chuck, a disk provided with cutting edges, gears for revolving the disk rapidly and the pencil holder slowly, an adjustable pencil sup-

port for gaging the length of the cut of the point of the pencil, a spring for retaining the pencil holder under tension toward the cutting edges, and means for limiting the movement of the pencil holder after the point has been made on the pencil, and means for simultaneously adjusting the pencil support and the limiting means.

9. In a pencil holder, the combination of a frame, a rocking pencil holder including a chuck, a spring for normally holding one end of the pencil holder adjacent a revolving cutter, a revolving cutter, a pencil support, means for adjusting the pencil support, and means including a lug and a tapered flange between the pencil support and the pencil holder for limiting the movement of the end of the pencil holder, after a point has been formed on the pencil.

10. In a pencil holder, the combination of a frame, a revolving cutter, a rocking pencil holder including a chuck, a spring normally exerting tension on the pencil holder to tilt one end adjacent the revolving cutter, a cam on the pencil holder, a pivoted lever having a surface which engages the cam to rock the end of the pencil holder away from the revolving cutter, a pencil support having an inclined surface, a lug on the pencil holder which coöperates with the inclined surface to limit the movement of the pencil holder after a point has been formed.

11. In a pencil holder, the combination of a frame, a revolving cutter, a rocking pencil holder including a chuck a spring normally exerting tension on the pencil holder to tilt one end adjacent the revolving cutter, a pivoted lever, a cam between the pivoted lever and the pencil holder to rock the pencil holder away from the revolving cutter, a pencil support having an inclined surface, a lug on the pencil holder, which cooperates with the inclined surface to limit the movement of the pencil holder after a point has been formed.

12. In a pencil sharpener, the combination of a frame, a revolving cutter, a rocking pencil holder, means for gaging the length of cut of the pencil, means for limiting the cutting operation after a point is formed on a pencil, and means for simultaneously adjusting the gaging means and the limiting means.

13. In a pencil sharpener, the combination of a frame, a revolving cutter, a rocking pencil holder, means including a pencil support for gaging the length of the cut of the pencil, means including a lug on the rocking pencil holder, and an inclined surface on the frame against which the lug abuts for limiting the cutting operation after a point is formed on a pencil, and means for simultaneously adjusting the pencil support and the limiting means.

14. In a pencil sharpener, the combination of a frame a revolving cutter, a rocking pencil holder, an adjustable bar having an extension on which the end of a pencil is supported to gage the length of the cut of a pencil, and means between the bar and the pencil holder for limiting the cutting operation after a point is formed on a pencil including an inclined surface on the frame and a lug on the rocking pencil holder coöperating with said inclined surface.

15. In a pencil sharpener, the combination of a frame, a revolving cutter, a pencil holder gears between the revolving cutter and the pencil holder, a cam surface and a stop on the pencil holder, a spring for normally holding one end of the pencil holder under tension adjacent the revolving cutter, a lever pivoted to the frame, and having a lug which engages the cam to tilt the pencil holder against the tension of the spring, said lever being limited by the stop, a slotted pencil support having an extension on which a pencil rests to gage the length of the cut on said pencil, means for adjusting the pencil support and an inclined flange and abutment coöperating therewith to limit the movement of the pencil after a point has been formed on the same.

In testimony whereof I have signed my name to this specification in the presence of two subscribing witnesses.

HERMAN ROLLE.

Witnesses:
C. H. ROBERTS,
JOHN W. LAIRD.

Copies of this patent may be obtained for five cents each, by addressing the "Commissioner of Patents, Washington, D. C."