P. SCHRODER.

ARMORED ELECTRIC CONDUCTOR.

APPLICATION FILED JUNE 20, 1908.

956,186. Patented Apr. 26, 1910.

Fig. 1.

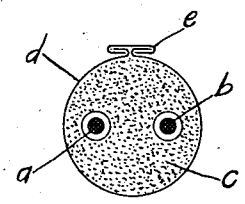

Fig. 2.

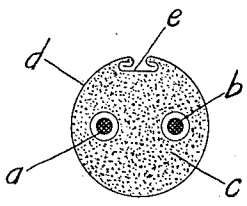

Fig. 3.

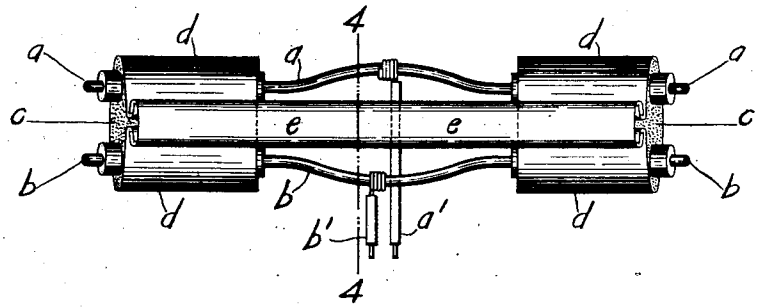

Fig. 4.

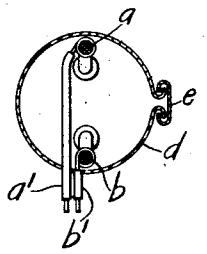

Witnesses:
Wm. J. Chipman.
H. J. Suhrbier.

Inventor
Paul Schröder
By his Attorneys
Goebel & Goebel.

UNITED STATES PATENT OFFICE.

PAUL SCHRÖDER, OF STUTTGART, GERMANY.

ARMORED ELECTRIC CONDUCTOR.

956,186. Specification of Letters Patent. Patented Apr. 26, 1910.

Application filed June 20, 1908. Serial No. 439,505.

To all whom it may concern:

Be it known that I, PAUL SCHRÖDER, a citizen of the Empire of Germany, residing at Stuttgart, in the Kingdom of Würtemberg and Empire of Germany, have invented certain new and useful Improvements in Armored Electric Conductors, of which the following is a specification.

This invention relates to certain improvements in armored electric conductors of that class in which the wires are embedded in an insulating material and surrounded by a sheet-metal covering or sheath. The sheet-metal coverings of these conductors were heretofore closed by interlocking folds. The sheet-metal used for the coverings was either steel, brass, copper or other material. As it has to be capable of strong resistance, hard metal has to be employed for the covering or sheath. Such inclosed conductors, however, were difficult to bend as at the interlocking folds or seam four layers of hard metal are superposed. It is therefore impossible to lay these conductors at sharp curves and bends, as there is a danger that the hard but still brittle material may break in bending. There is, however, another objection to the armored electric conductors heretofore in use. It is well known that the exterior covering or sheath is used as a conductor for the electric current; for instance, in the three-wire systems, as the intermediate conductor. This intermediate conductor has to be of such dimensions that its electrical resistance is in a certain proportion to the electrical resistance of the interior wires. As the coverings of all inclosed conductors are usually made of the same sheet-metal so as to simplify the manufacture, the covering has, independently of the electrical resistance of the interior conductors, for the same diameter of the conductor throughout the same resistance.

The object of this invention is to obviate the objections referred to and to supply an armored electric conductor in which they are completely and effectively obviated; and for this purpose the invention consists of an armored electric conductor in which the covering or sheath is provided at the adjacent edges with outwardly-bent folds and tightly held in position by a special connecting strip having inwardly-bent interlocking edges, and in which the material and the conductivity of the covering is in certain proportion to the conductivity of the interior conductors.

In the accompanying drawings, Figures 1 and 2 are vertical transverse sections of my improved armored electric conductor, showing two different constructions of the same, Fig. 3 is a perspective view of the improved conductor, showing the arrangement of a branch-connection for the same, and Fig. 4 is a vertical transverse section of the branch-connection.

Similar letters of reference indicate corresponding parts.

The interior conductors *a* and *b* are surrounded in the usual well-known manner by solid insulating material *c* and are inclosed by a tubular covering or sheath *d*. In place of connecting the edges of the covering or sheath *d* by a seam formed of bent and interlocking folds, the adjacent edges of the sheet-metal covering or sheath are bent in outward or inward direction so as to abut at their bent portions, and connected by a sheet-metal strip *e* the edges of which are bent inwardly so as to engage with the outwardly or inwardly bent folds of the covering or sheath *d*, according as the clamping strip is located at the outside or at the inside of the covering, as shown respectively in Figs. 1 and 2. The connection of the covering or sheath is therefore obtained by means of a clamp, and not, as before, by means of an interlocking seam. It is true that the material of the covering or sheath at the point of connection is likewise a fourfold one, but it is not absolutely necessary that the clamping strip should be of the same material as the sheath. On the contrary, without impairing the durability of the armored conductor, it can be made of a softer or thinner sheet-metal that can be bent with great facility. The clamping strip, which serves as the locking device, permits furthermore, in a similar manner as the conductors heretofore in use, to bring the electrical resistance of the covering or sheath in certain proportionate relation with the resistance of the interior conductors. The clamping strip can also be made from a metal by the dimensions of which the electrical resistance of the covering or sheath is increased or diminished; or it can be made of a metal having a greater or lesser electric conductivity, that is to say, the strip *e* can be made of another material than the sheath itself. The edges of the sheath can be bent outwardly, as shown in Fig. 1, or inwardly, as shown in Fig. 2, the clamping strip being

then located correspondingly, either at the outside or at the inside of the covering. The construction shown in Fig. 2 has the further advantage that no projecting portion is formed on the covering or shell. The armored electric conductor described has another special advantage as compared with the conductors having interlocking folds or seams. This advantage is found at the points where branch-connections are made. In the well-known armored electric conductors, the conductor had to be interrupted at the branch-connection and a special box had to be used. Such a branch-connection does not only take up considerable time in making it, but has the objection that the electric connection is made by means of clamps or clamping screws, which, as well known, form the cause of loss of current, as in the course of time the spring-clamps lose their tightness or the screws are loosened by unavoidable vibrations.

The improved conductor facilitates the arrangement of a branch-connection, as shown in Fig. 3. All that is necessary, is to remove at the point where the branch is to be made, a portion of the covering or sheath, but without removing the locking strip *e*, which connects the two ends of the covering or sheath, as before, across the point where the branch-connection is located. The insulating material is then removed from the wires *a* and *b*, which latter are stretched and slightly bent and then connected with the branch-conductors a^1, b^1 in the usual manner, soldered together, and finally covered by any suitable insulating strip or band, placed around the wires. The point of contact between the main and branch conductors is then much better and more reliable than when made according to the old style. The improved arrangement offers no greater difficulty than the old system in which the insulating material has to be removed from the conductors when the branch-connection is made, while it is much cheaper as the branch-box heretofore used is dispensed with.

Having thus described my invention, I claim as new and desire to secure by Letters Patent:

In an armored electric conductor, the combination of interior wires surrounded by insulating material a portion of which has been removed whereby a portion of said wires is bared, metal covering sheaths inclosing said material on each side of the space from which the insulating material is removed, said covering having bent-over side-edges, branch-conductors connected directly with the bared portion of the interior wires, and a clamping strip having bent-over edges interlocking with the bent-over edges of the covering sheaths, and extending across said bared portions and connecting said sheaths.

In testimony, that I claim the foregoing as my invention, I have signed my name in presence of two subscribing witnesses.

PAUL SCHRÖDER.

Witnesses:

ALFRED SÜPLE,

ADOLF GERHAUSER.