(12) INTERNATIONAL APPLICATION PUBLISHED UNDER THE PATENT COOPERATION TREATY (PCT)

(19) World Intellectual Property Organization
International Bureau

(43) International Publication Date
27 March 2003 (27.03.2003)

PCT

(10) International Publication Number
WO 03/026152 A1

(51) International Patent Classification[7]: H04B 1/38, H04Q 7/28

(21) International Application Number: PCT/US02/29098

(22) International Filing Date:
13 September 2002 (13.09.2002)

(25) Filing Language: English

(26) Publication Language: English

(30) Priority Data:
09/952,591 14 September 2001 (14.09.2001) US

(71) Applicant *(for all designated States except US)*: **TREX ENTERPRISES CORPORATION** [US/US]; 10455 Pacific Center Court, San Diego, CA 92121-4339 (US).

(72) Inventors; and

(75) Inventors/Applicants *(for US only)*: **JOHNSON, Paul** [US/US]; 208 E. Kamakoi Loop, Kihei, Hi 96753 (US). **LOVBERG, John** [US/US]; 4925 Canterbury Drive, San Diego, CA 92116 (US). **TANG, Kenneth, Y.** [US/US]; 2729 Via Asoleado, Alpine, CA 91901 (US). **OLSEN, Randall** [US/US]; 2936 Avenida Theresa, Carlsbad, CA 92009 (US). **KOLINKO, Vladimir** [RU/US]; 12682 Torrey Bluff Drive, Apartment #227, San Diego, CA 92130 (US).

(74) Agents: **ROSS, John, R.** et al.; P.O. Box 2138, Del Mar, CA 92014 (US).

(81) Designated States *(national)*: AE, AG, AL, AM, AT, AU, AZ, BA, BB, BG, BR, BY, BZ, CA, CH, CN, CO, CR, CU, CZ, DE, DK, DM, DZ, EC, EE, ES, FI, GB, GD, GE, GH, GM, HR, HU, ID, IL, IN, IS, JP, KE, KG, KP, KR, KZ, LC, LK, LR, LS, LT, LU, LV, MA, MD, MG, MK, MN, MW, MX, MZ, NO, NZ, OM, PH, PL, PT, RO, RU, SD, SE, SG, SI, SK, SL, TJ, TM, TN, TR, TT, TZ, UA, UG, US, UZ, VN, YU, ZA, ZM, ZW.

(84) Designated States *(regional)*: ARIPO patent (GH, GM, KE, LS, MW, MZ, SD, SL, SZ, TZ, UG, ZM, ZW), Eurasian patent (AM, AZ, BY, KG, KZ, MD, RU, TJ, TM), European patent (AT, BE, BG, CH, CY, CZ, DE, DK, EE, ES, FI, FR, GB, GR, IE, IT, LU, MC, NL, PT, SE, SK, TR), OAPI patent (BF, BJ, CF, CG, CI, CM, GA, GN, GQ, GW, ML, MR, NE, SN, TD, TG).

Published:
— *with international search report*

For two-letter codes and other abbreviations, refer to the "Guidance Notes on Codes and Abbreviations" appearing at the beginning of each regular issue of the PCT Gazette.

WO 03/026152 A1

(54) Title: CELLULAR TELEPHONE SYSTEM WITH FREE SPACE MILLIMETER WAVE TRUNK LINE

(57) Abstract: A wireless cellular communication system in which groups of cellular base stations communicate with a central office via a narrow-band millimeter wave trunk line. The transceivers are equipped with antennas providing beam divergence small enough to ensure efficient spatial and directional partitioning of the data channels so that an almost unlimited number of transceivers will be able to simultaneously use the same millimeter wave spectrum. In a preferred embodiment the trunk line communication link operates within the 92 to 95 GHz portion of the millimeter spectrum. A large number of base stations are each allocated a few MHz portion of a 900 MHz bandwidth of the millimiter wave trunk line. A first transceiver transmits at a first bandwidth and receives at a second bandwidth both within the above spectral range. A second transceiver transmits at the second bandwidth and receives at the first bandwidth. Antennas are described to maintain beam directional stability to less than one-half the half-power beam width. In a preferred embodiment the first and second spectral ranges are 92.3-93.2 GHz and 94.1-95.0 GHZ and the half power beam width is about 0.36 degrees or less.

CELLULAR TELEPHONE SYSTEM
WITH
FREE SPACE MILLIMETER WAVE TRUNK LINE

The present invention relates to wireless communications links and specifically to high data rate point-to-point links.

BACKGROUND OF THE INVENTION

Local Wireless Radio Communication

Local wireless communication services represent a very rapidly growing industry. These services include paging and cellular telephone services. The cellular telephone industry currently is in its second generation with several types of cellular telephone systems being promoted. The cellular market in the United States grew from about 2 million subscribers and $2 million in revenue in 1988 to more than 60 million subscribers about $30 billion in revenue in 1998 and the growth is continuing in the United States and also around the world as the services become more available and prices decrease.

FIG. 1 describes a typical cellular telephone system. A cellular service provider divides its territory up into hexagonal cells as shown in FIG. 1. These cells may be about 5 miles across, although in densely populated regions with many users these cells may be broken up into much smaller cells called micro cells. This is done because cellular providers are allocated only a limited portion of the radio spectrum. For example, one spectral range allocated for cellular communication is the spectral range: 824 MHz to 901 MHz. (Another spectral range allocated to cellular service is 1.8 GHz to 1.9 GHz) A provider operating in the 824-901 MHz range may set up its system for the cellular stations to transmit in the 824 MHz to 851 MHz range and to receive in the 869 MHz to 901 MHz range. The transmitters both at the cellular stations and in devices used by subscribers operate at very low power (just a few Watts) so signals generated in a cell do not provide interference in any other cells beyond immediate adjacent cells. By breaking its allocated transmitting spectrum and receive spectrum in seven parts (A-G) with the hexagonal cell pattern, a service provider can set up its system so that there is a two-cell separation between the same

frequencies for transmit or receive, as shown in FIG. 1. A one-cell separation can be provided by breaking the spectrum into three parts. Therefore, these three or seven spectral ranges can be used over and over again throughout the territory of the cellular service provider. In a typical cellular system each cell (with a transmit bandwidth and a receive bandwidth each at about 12 MHz wide) can handle as many as about 1200 two-way telephone communications within the cell simultaneously. With lower quality communication, up to about 9000 calls can be handled in the 12 MHz bandwidth. Several different techniques are widely used in the industry to divide up the spectrum within a given cell. These techniques include analog and digital transmission and several techniques for multiplexing the digital signals. These techniques are discussed at pages 313 to 316 in The Essential Guide to Telecommunications, Second Edition, published by Prentice Hall and many other sources. Third generation cellular communication systems promise substantial improvements with more efficient use of the communication spectra.

Other Prior Art Wireless Communication Techniques

Point-to-Point and Point-to-Multi-Point

Most wireless communication, at least in terms of data transmitted is one way, point to multi-point, which includes commercial radio and television. However, there are many examples of point-to-point wireless communication. Cellular telephone systems, discussed above, are examples of low-data-rate, point-to-point communication. Microwave transmitters on telephone system trunk lines are another example of prior art, point-to-point wireless communication at much higher data rates. The prior art includes a few examples of point-to-point laser communication at infrared and visible wavelengths.

Information Transmission

Analog techniques for transmission of information are still widely used; however, there has recently been extensive conversion to digital, and in the foreseeable future transmission of information will be mostly digital with volume measured in bits per second. To transmit a typical telephone conversation digitally utilizes about 5,000 bits per second (5 Kbits per second). Typical personal computer modems connected to the Internet operate at, for example, 56 Kbits per second. Music can be transmitted point to point in real time with good quality using MP3 technology at digital data

rates of 64 Kbits per second. Video can be transmitted in real time at data rates of about 5 million bits per second (5 Mbits per second). Broadcast quality video is typically at 45 or 90 Mbps. Companies (such as line telephone, cellular telephone and cable companies) providing point-to-point communication services build trunk lines to serve as parts of communication links for their point-to-point customers. These trunk lines typically carry hundreds or thousands of messages simultaneously using multiplexing techniques. Thus, high volume trunk lines must be able to transmit in the gigabit (billion bits, Gbits, per second) range. Most modern trunk lines utilize fiber optic lines. A typical fiber optic line can carry about 2 to 10 Gbits per second and many separate fibers can be included in a trunk line so that fiber optic trunk lines can be designed and constructed to carry any volume of information desired virtually without limit. However, the construction of fiber optic trunk lines is expensive (sometimes very expensive) and the design and the construction of these lines can often take many months especially if the route is over private property or produces environmental controversy. Often the expected revenue from the potential users of a particular trunk line under consideration does not justify the cost of the fiber optic trunk line. Digital microwave communication has been available since the mid-1970's. Service in the 18-23 GHz radio spectrum is called "short-haul microwave" providing point-to-point service operating between 2 and 7 miles and supporting between four to eight T1 links (each at 1.544 Mbps). Recently, microwave systems operating in the 11 to 38 Ghz band have been designed to transmit at rates up to 155 Mbps (which is a standard transmit frequency known as "OC-3 Standard") using high order modulation schemes.

Data Rate and Frequency

Bandwidth-efficient modulation schemes allow, as a general rule, transmission of data at rates of about 1 to 8 bits per second per Hz of available bandwidth in spectral ranges including radio wave lengths to microwave wavelengths. Data transmission requirements of 1 to tens of Gbps thus would require hundreds of MHz of available bandwidth for transmission. Equitable sharing of the frequency spectrum between radio, television, telephone, emergency services, military and other services typically limits specific frequency band allocations to about 10% fractional bandwidth (i.e., range of frequencies equal to about 10% of center frequency). AM radio, at almost 100% fractional bandwidth (550 to 1650 GHz) is an anomaly; FM radio, at 20%

fractional bandwidth, is also atypical compared to more recent frequency allocations, which rarely exceed 10% fractional bandwidth.

Reliability Requirements

Reliability typically required for wireless data transmission is very high, consistent with that required for hard-wired links including fiber optics. Typical specifications for error rates are less than one bit in ten billion (10^{-10} bit-error rates), and link availability of 99.999% (5 minutes of down time per year). This necessitates all-weather link operability, in fog and snow, and at rain rates up to 100 mm/hour in many areas. On the other hand cellular telephone systems do not require such high reliability. As a matter of fact cellular users (especially mobile users) are accustom to poor service in many regions.

Weather Conditions

In conjunction with the above availability requirements, weather-related attenuation limits the useful range of wireless data transmission at all wavelengths shorter than the very long radio waves. Typical ranges in a heavy rainstorm for optical links (i.e., laser communication links) are 100 meters, and for microwave links, 10,000 meters.

Atmospheric attenuation of electromagnetic radiation increases generally with frequency in the microwave and millimeter-wave bands. However, excitation of rotational modes in oxygen and water vapor molecules absorbs radiation preferentially in bands near 60 and 118 GHz (oxygen) and near 23 and 183 GHz (water vapor). Rain, which attenuates through large-angle scattering, increases monotonically with frequency from 3 to nearly 200 GHz. At the higher, millimeter-wave frequencies, (i.e., 30 GHz to 300 GHz corresponding to wavelengths of 1.0 centimeter to 1.0 millimeter) where available bandwidth is highest, rain attenuation in very bad weather limits reliable wireless link performance to distances of 1 mile or less. At microwave frequencies near and below 10 GHz, link distances to 10 miles can be achieved even in heavy rain with high reliability, but the available bandwidth is much lower.

Setting Up Additional Cells in a Telephone System is Expensive

The cost associated with setting up an additional cell in a new location or creating a micro cell within an existing cell with prior art techniques is in the range of about $650,000 to $800,000. (See page 895 Voice and Data Communication Handbook, Fourth Edition, published by McGraw Hill.) These costs must be recovered from users of the cellular system. People in the past have avoided use of their cellular equipment because the cost was higher that their line telephones. Recently, costs have become comparable.

The Need

Therefore, a great need exists for techniques for adding, at low cost, additional cells in cellular communication systems.

SUMMARY OF THE INVENTION

The present invention provides a wireless cellular communication system in which groups of cellular base stations communicate with a central office via a narrow-beam millimeter wave trunk line. The transceivers are equipped with antennas providing beam divergence small enough to ensure efficient spatial and directional partitioning of the data channels so that an almost unlimited number of point-to-point transceivers will be able to simultaneously use the same millimeter wave spectrum. In a preferred embodiment the trunk line communication link operates within the 92 to 95 GHz portion of the millimeter spectrum. A large number of base stations are each allocated a few MHz portion of a 900 MHz bandwidth of the millimeter wave trunk line. A first transceiver transmits at a first bandwidth and receives at a second bandwidth, both within the above spectral range. A second transceiver transmits at the second bandwidth and receives at the first bandwidth. Antennas are described to maintain beam directional stability to less than one-half the half-power beam width. In a preferred embodiment the first and second spectral ranges are 92.3-93.2 GHz and 94.1-95.0 GHz and the half power beam width is about 0.36 degrees or less. Thus, in this system the low frequency bandwidth is efficiently utilized over and over again by dividing a territory into small cells and using low power antenna. The higher frequency bandwidth is efficiently utilized over and over again by using transmitting antennae that are designed to produce very narrow beams directed at receiving

antennae. In a preferred embodiment cellular base stations are prepackaged for easy quick installation at convenient locations such as the tops of commercial buildings.

BRIEF DESCRIPTION OF THE DRAWINGS

FIG. 1 is a sketch showing a prior art cellular network.

FIG. 2 is a sketch showing features of a single prior art cell.

FIG. 3 is a sketch of a preferred embodiment of the present invention.

FIG. 4 demonstrates up conversion from cell phone frequencies to trunk line frequencies.

FIG. 5 demonstrates down conversion from trunk line frequencies to cell phone frequencies.

FIG. 6 is a block diagram showing the principal components of a prepackaged cellular base station designed for roof-top installation.

FIG. 7 is a schematic diagram of a millimeter-wave transmitter of a prototype transceiver system built and tested by Applicants.

FIG. 8 is a schematic diagram of a millimeter-wave receiver of a prototype transceiver system built and tested by Applicants.

FIG. 9 is measured receiver output voltage from the prototype transceiver at a transmitted bit rate of 200 Mbps.

FIG. 10 is the same waveform as FIG. 9, with the bit rate increased to 1.25 Gbps.

FIGS. 11A and 11B are schematic diagrams of a millimeter-wave transmitter and receiver in one transceiver of a preferred embodiment of the present invention.

FIG. 12A and 12B are schematic diagrams of a millimeter-wave transmitter and receiver in a complementary transceiver of a preferred embodiment of the present invention.

FIGS. 13A and 13B show the spectral diagrams for a preferred embodiment of the present invention.

DETAILED DESCRIPTION OF PREFERRED EMBODIMENTS

A first preferred embodiment of the present invention comprises a system of linked millimeter-wave radios which take the place of wire or fiber optic links between the

cells of a cellular network. The use of the millimeter-wave links can eliminates the need to lay cable or fiber, can be installed relatively quickly, and can provide high bandwidth normally at a lower cost than standard telecom-provided wires or cable. Since the millimeter-wave links simply up and down convert the signal for point-to-point transmission, the data and protocols used by the original signals are preserved, making the link 'transparent' to the user. This embodiment supports a conventional system operating at standard cellular telephone frequencies, but it is equally applicable to other, newer technologies such as 1.8 GHz to 1.9 GHz PCS systems.

A typical prior art cell phone base station transmits in the 824-851 MHz band and receives in the 869-901 MHz band and is connected mobile telephone switching office by wire connections which is in turn connected to a central office via a high speed wired connection. The central office performs call switching and routing. It is possible to replace both wired links with a millimeter-wave link, capable of carrying the signals from several cellular base stations to the central office for switching and routing, and then back out again to the cellular base stations for transmission to the users' cellular phones and other communication devices. A millimeter-wave link with 1 GHz of bandwidth will be capable of handling approximately 30 to 90 cellular base stations, depending on the bandwidth of the base stations. Since the cellular base stations are typically within a few miles (or less for micro cells) of each other, the millimeter-wave link would form a chain from base station to base station, then back to the central office. FIG. 3 illustrates the basic concept.

Most wireless computer networking equipment on the market today is designed according to IEEE standards 802.11a and 802.11b that describe a format and technique for packet data interchange between computers. In this equipment the 802.11b - formatted data is transmitted and received on one of eleven channels in the 2.4-2.5 GHz band and uses the same frequencies for transmit and receive. Therefore, in this preferred embodiment the cellular stations all operate on a slice of the 2.4 to 2.5 GHz band using equipment built in accordance with the above IEEE standards. An up/down converter is provided to up and down convert the information for transmittal on the millimeter wave links. The up/down converter is described below. Typically, base stations are organized in generally hexagonal cells in groups of 7 cells as shown in FIG. 1. In order to avoid interference, each of the 7 cells operate at a

different slice of the available bandwidth in which case each frequency slice is separated by two cells. If 3 different frequencies are used in the group of 7 cells, there is a one-cell separation of frequencies.

Cellular Base Station Transmission Back to Central Office

Cell phone calls are received in the 824-851 MHz band at each group of base stations, and up-converted to a 27 MHz slot of frequencies in the 91-93 GHz band for transmission over the link back to the central office. Each group of base stations is allocated a 27 MHz slice of spectrum in the 91-93 GHz band as follows:

Base Station Group Number	Base Station Frequency	Trunk Line Frequency
1	824 - 851 MHz	91.000 - 91.027 GHz
2	824 - 851 MHz	91.027 - 91.054 GHz
3	824 - 851 MHz	91.054 - 91.081 GHz
.	.	.
.	.	.
.	.	.
30	824 - 851 MHz	91.783 - 91.810 GHz
31	824 - 851 MHz	91.810 - 91.837 GHz
32	824 - 851 MHz	91.837 - 91.864 GHz

FIG.4 shows a block diagram of a system that converts the cellular base station frequencies up to the millimeter-wave band for transmission back to the central office. Each base station receives both the cell phone frequencies within its cell, and the millimeter-wave frequencies from the earlier base station in the chain. The cell-phone frequencies are up-converted to a slot (of spectrum) in the 91-93 GHz band and added to the 91-93 GHz signals from the earlier base station up the chain. The combined signals are then retransmitted to the next base station in the chain. Each base station has a local oscillator set to a slightly different frequency, which determines the up-converted frequency slot for that base station. The local oscillator may be multiplied

by a known pseudo-random bit stream to spread its spectrum and to provide additional security to the millimeter-wave link.

At the telephone company central switching office, each 27 MHz slot of frequencies in the 91-93 GHz band is downconverted to the cellular telephone band. If a spread-spectrum local oscillator was used on the millimeter-wave link, the appropriate pseudo random code must be used again in the downconverter's local oscillator to recover the original information. Once the millimeter-wave signals are downconverted to the cell phone band, standard cellular equipment is used to detect, switch, and route the calls.

Central Office Transmission to Cellular Base Stations

Cell phone calls leave the central office on a millimeter-wave link and each group of cellular base stations downconverts a 32 MHz slice of the spectrum to the cell phone band for transmission to the individual phones. The cellular base stations transmit (to the phones) in the 869-901 MHz band so each group of base stations requires a 32 MHz slice of the spectrum in the 91-93 GHz range on the millimeter wave link. The 1.024 GHz will support 32 base stations. Each group of base stations is allocated a 32 MHz slice of spectrum in the 91-93 GHz band as follows:

Base station # Trunk Line Frequencies (link RX) converts to Base Station (cell TX)

Base Station Group Number	Trunk Line Frequency	Base Station Frequency
1	92.000 - 92.032 GHz	869 - 901 MHz
2	92.032 - 92.064 GHz	869 - 901 MHz
3	92.064 - 92.096 GHz	869 - 901 MHz
.	.	.
.	.	.

30	92.928 - 92.960 GHz	869 - 901 MHz
31	92.960 - 92.992 GHz	869 - 901 MHz
32	92.992 - 92.024 GHz	869 - 901 MHz

FIG. 5 shows a block diagram of a system that receives millimeter-wave signals from the central office and converts them to the cellular band for transmission by a cell base station. Each base station receives picks off the signals in its 32 MHz slice of the 91-93 GHz spectrum, down-converts this band to the cell phone band, and broadcasts it. The 91-93 GHz band is also retransmitted to the next base station in the chain. Each base station has a local oscillator set to a slightly different frequency, which determines the 32 MHz wide slot (in the 91-93 GHz band) that is assigned to that base station. If a spread-spectrum local oscillator was used on the up-conversion at the central office, then the appropriate pseudo random code must be used again in the down-converter's local oscillator (at each base station) to recover the original information.

At the telephone company central switching office calls are detected, switched, and routed between the various cellular base stations and the landline network. Each group of cellular base stations at the central office is represented by a 32 MHz wide slot of spectrum, which is up-converted to the 91-93 GHz band and sent out over a point-to-point link to the chain of several base stations. The local oscillator used to up-convert the signals may be spread-spectrum to provide additional security to the millimeter-wave link.

Prototype Demonstration of MM Wave T/R

A prototype demonstration of the millimeter-wave transmitter and receiver useful for the present invention is described by reference to FIGS. 1 to 4. With this embodiment the Applicants have demonstrated digital data transmission in the 93 to 97 GHz range at 1.25 Gbps with a bit error rate below 10^{-12}.

The circuit diagram for the millimeter-wave transmitter is shown in FIG. 7. Voltage-controlled microwave oscillator 1, Westec Model VTS133/V4, is tuned to transmit at 10 GHz, attenuated by 16 dB with coaxial attenuators 2 and 3, and divided into two channels in two-way power divider 4. A digital modulation signal is pre-amplified in amplifier 7, and mixed with the microwave source power in triple-balanced mixer 5, Pacific Microwave Model M3001HA. The modulated source power is combined with the un-modulated source power through a two-way power combiner 6. A line stretcher 12 in the path of the un-modulated source power controls the depth of modulation of the combined output by adjusting for constructive or destructive phase summation. The amplitude-modulated 10 GHz signal is mixed with a signal from an 85-GHz source oscillator 8 in mixer 9 and high-pass filtered in waveguide filter 13 to reject the 75 GHz image band. The resultant, amplitude-modulated 95 GHz signal contains spectral components between 93 and 97 GHz, assuming unfiltered 1.25 Gbps modulation. A rectangular WR-10 wave guide output of the high pass filter is converted to a circular wave guide 14 and fed to a circular horn 15 of 4 inches diameter, where it is transmitted into free space. The horn projects a half-power beam width of 2.2 degrees.

The circuit diagram for the receiver is shown in FIG. 8. The antenna is a circular horn 1 of 6 inches in diameter, fed from a waveguide unit 14R consisting of a circular W-band wave-guide and a circular-to-rectangular wave-guide converter which translates the antenna feed to WR-10 wave-guide which in turn feeds heterodyne receiver module 2R. This module consists of a monolithic millimeter-wave integrated circuit (MMIC) low-noise amplifier spanning 89-99 GHz, a mixer with a two-times frequency multiplier at the LO port, and an IF amplifier covering 5-15 GHz. These receivers are available from suppliers such as Lockheed Martin. The local oscillator 8R is a cavity-tuned Gunn oscillator operating at 42.0 GHz (Spacek Model GQ410K), feeding the mixer in module R2 through a 6 dB attenuator 7. A bias tee 6 at the local oscillator input supplies DC power to receiver module 2R. A voltage regulator circuit using a National Semiconductor LM317 integrated circuit regulator supplies +3.3V through bias tee 6. An IF output of the heterodyne receiver module 2R is filtered at 6-12 GHz using bandpass filter 3 from K&L Microwave. Receiver 4R which is an HP Herotek Model DTM 180AA diode detector, measures total received power. The voltage output from the diode detector is amplified in two-cascaded microwave

amplifiers 5R from MiniCircuits, Model 2FL2000. The baseband output is carried on coax cable to a media converter for conversion to optical fiber, or to a Bit Error-Rate Tester (BERT) 10R.

In the laboratory, this embodiment has demonstrated a bit-error rate of less than 10^{-12} for digital data transmission at 1.25 Gbps. The BERT measurement unit was a Microwave Logic, Model gigaBERT. The oscilloscope signal for digital data received at 200 Mbps is shown in FIG. 9. At 1.25 Gbps, oscilloscope bandwidth limitations lead to the rounded bit edges seen in FIG. 10. Digital levels sustained for more than one bit period comprise lower fundamental frequency components (less than 312 MHz) than those which toggle each period (622 MHz), so the modulation transfer function of the oscilloscope, which falls off above 500 MHz, attenuates them less. These measurement artifacts are not reflected in the bit error-rate measurements, which yield $<10^{-12}$ bit error rate at 1.25 Gbps.

Transceiver System

A preferred embodiment of the present invention is described by reference to FIGS. 11A to 13B. The link hardware consists of a millimeter-wave transceiver pair including a pair of millimeter-wave antennas and a microwave transceiver pair including a pair of microwave antennas. The millimeter wave transmitter signal is amplitude modulated and single-sideband filtered, and includes a reduced-level carrier. The receiver includes a heterodyne mixer, phase-locked intermediate frequency (IF) tuner, and IF power detector.

Millimeter-wave transceiver A (FIGS. 11A and 11B) transmits at 92.3-93.2 GHz as shown at 60 in FIG. 13A and receives at 94.1-95.0 GHz as shown at 62, while millimeter-wave transmitter B (FIGS. 12A and 12B) transmits at 94.1-95.0 GHz as shown at 64 in FIG. 13B and receives at 92.3-93.2 GHz as shown at 66.

Millimeter Wave Transceiver A

As shown in FIG. 11A in millimeter-wave transceiver A, transmit power is generated with a cavity-tuned Gunn diode 21 resonating at 93.15 GHz. This power is amplitude modulated using two balanced mixers in an image reject configuration 22, selecting

the lower sideband only. The source 21 is modulated at 1.25 Gbps in conjunction with Gigabit-Ethernet standards. The modulating signal is brought in on optical fiber, converted to an electrical signal in media converter 19 (which in this case is an Agilent model HFCT-5912E) and amplified in preamplifier 20. The amplitude-modulated source is filtered in a 900 MHz-wide passband between 92.3 and 93.2 GHz, using a bandpass filter 23 on microstrip. A portion of the source oscillator signal is picked off with coupler 38 and combined with the lower sideband in power combiner 39, resulting in the transmitted spectrum shown at 60 in FIG. 13A. The combined signal propagates with horizontal polarization through a waveguide 24 to one port of an orthomode transducer 25, and on to a two-foot diameter Cassegrain dish antenna 26, where it is transmitted into free space with horizontal polarization.

The receiver unit at Station A as shown on FIGS 11B1 and 11B2 is fed from the same Cassegrain antenna 26 as is used by the transmitter, at vertical polarization (orthogonal to that of the transmitter), through the other port of the orthomode transducer 25. The received signal is pre-filtered with bandpass filter 28A in a passband from 94.1 to 95.0 GHz, to reject back scattered return from the local transmitter. The filtered signal is then amplified with a monolithic MMW integrated-circuit amplifier 29 on indium phosphide, and filtered again in the same passband with bandpass filter 28B. This twice filtered signal is mixed with the transmitter source oscillator 21 using a heterodyne mixer-downconverter 30, to an IF frequency of 1.00-1.85 GHz, giving the spectrum shown at 39A in FIG. 13A. A portion of the IF signal, picked off with coupler 40, is detected with integrating power detector 35 and fed to an automatic gain control circuit 36. The fixed-level IF output is passed to the next stage as shown in FIG. 11B2. Here a quadrature-based (I/Q) phase-locked synchronous detector circuit 31 is incorporated, locking on the carrier frequency of the remote source oscillator. The loop is controlled with a microprocessor 32 to minimize power in the "Q" channel while verifying power above a set threshold in the "I" channel. Both "I" and "Q" channels are lowpass-filtered at 200 MHz using lowpass filters 33A and 33B, and power is measured in both the "I" and Q channels using square-law diode detectors 34. The baseband mixer 38 output is pre-amplified and fed through a media converter 37, which modulates a laser diode source into a fiber-optic coupler for transition to optical fiber transmission media.

Transceiver B

As shown in FIG. 12A in millimeter-wave transceiver B, transmit power is generated with a cavity-tuned Gunn diode 41 resonating at 94.15 GHz. This power is amplitude modulated using two balanced mixers in an image reject configuration 42, selecting the upper sideband only. The source 41 is modulated at 1.25 Gbps in conjunction with Gigabit-Ethernet standards. The modulating signal is brought in on optical fiber as shown at 80, converted to an electrical signal in media converter 60, and amplified in preamplifier 61. The amplitude-modulated source is filtered in a 900 MHz-wide passband between 94.1 and 95.0 GHz, using a bandpass filter 43 on microstrip. A portion of the source oscillator signal is picked off with coupler 48 and combined with the higher sideband in power combiner 49, resulting in the transmitted spectrum shown at 64 in FIG. 13B. The combined signal propagates with vertical polarization through a waveguide 44 to one port of an orthomode transducer 45, and on to a Cassegrain dish antenna 46, where it is transmitted into free space with vertical polarization.

The receiver is fed from the same Cassegrain antenna 46 as the transmitter, at horizontal polarization (orthogonal to that of the transmitter), through the other port of the orthomode transducer 45. The received signal is filtered with bandpass filter 47A in a passband from 92.3 to 93.2 GHz, to reject backscattered return from the local transmitter. The filtered signal is then amplified with a monolithic MMW integrated-circuit amplifier on indium phosphide 48, and filtered again in the same passband with bandpass filter 47B. This twice filtered signal is mixed with the transmitter source oscillator 41 using a heterodyne mixer-downconverter 50, to an IF frequency of 1.00-1.85 GHz, giving the spectrum shown at 39B in FIG. 13B. A portion of the IF signal, picked off with coupler 62, is detected with integrating power detector 55 and fed to an automatic gain control circuit 56. The fixed-level IF output is passed to the next stage as shown on FIG. 12B2. Here a quadrature-based (I/Q) phase-locked synchronous detector circuit 51 is incorporated, locking on the carrier frequency of the remote source oscillator. The loop is controlled with a microprocessor 52 to minimize power in the "Q" channel while verifying power above a set threshold in the "I" channel. Both "I" and "Q" channels are lowpass-filtered at 200 MHz using a bandpass filters 53A and 53B, and power is measured in each channel using a square-

law diode detector 54. The baseband mixer 58 output is pre-amplified and fed through a media converter 57, which modulates a laser diode source into a fiber-optic coupler for transition to optical fiber transmission media.

Very Narrow Beam Width

A dish antenna of two-foot diameter projects a half-power beam width of about 0.36 degrees at 94 GHz. The full-power beamwidth (to first nulls in antenna pattern) is narrower than 0.9 degrees. This suggests that up to 400 independent beams could be projected azimuthally around an equator from a single transmitter location, without mutual interference, from an array of 2-foot dishes. At a distance of five miles, two receivers placed 400 feet apart can receive independent data channels from the same transmitter location. Conversely, two receivers in a single location can discriminate independent data channels from two transmitters ten miles away, even when the transmitters are as close as 400 feet apart. Larger dishes can be used for even more directivity.

Backup Microwave Transceiver Pair

During severe weather conditions data transmission quality will deteriorate at millimeter wave frequencies. Therefore, in preferred embodiments of the present invention a backup communication link is provided which automatically goes into action whenever a predetermined drop-off in quality transmission is detected. A preferred backup system is a microwave transceiver pair operating in the 10.7-11.7 GHz band. This frequency band is already allocated by the FCC for fixed point-to-point operation. FCC service rules parcel the band into channels of 40-MHz maximum bandwidth, limiting the maximum data rate for digital transmissions to 45 Mbps full duplex. Transceivers offering this data rate within this band are available off-the-shelf from vendors such as Western Multiplex Corporation (Models Lynx DS-3, Tsunami 100BaseT), and DMC Stratex Networks (Model DXR700 and Altium 155). The digital radios are licensed under FCC Part 101 regulations. The microwave antennas are Cassegrain dish antennas of 24-inch diameter. At this diameter, the half-power beamwidth of the dish antenna is 3.0 degrees, and the full-power beamwidth is 7.4 degrees, so the risk of interference is higher than for MMW antennas. To compensate this, the FCC allocates twelve separate transmit and twelve separate

receive channels for spectrum coordination within the 10.7-11.7 GHz band. Sensing of a millimeter wave link failure and switching to redundant microwave channel is an existing automated feature of the network routing switching hardware available off-the-shelf from vendors such as Cisco, Foundry Networks and Juniper Networks.

The reader should understand that in many installations the provision of a backup system will not be justified from a cost-benefit analysis depending on factors such as costs, distance between transmitters, quality of service expected and the willingness of customers to pay for continuing service in the worse weather conditions.

Narrow Beam Width Antennas

The narrow antenna beam widths afforded at millimeter-wave frequencies allow for geographical portioning of the airwaves, which is impossible at lower frequencies. This fact eliminates the need for band parceling (frequency sharing), and so enables wireless communications over a much larger total bandwidth, and thus at much higher data rates, than were ever previously possible at lower RF frequencies.

The ability to manufacture and deploy antennas with beam widths narrow enough to ensure non-interference, requires mechanical tolerances, pointing accuracies, and electronic beam steering/tracking capabilities, which exceed the capabilities of the prior art in communications antennas. A preferred antenna for long-range communication at frequencies above 70 GHz has gain in excess of 50 dB, 100 times higher than direct-broadcast satellite dishes for the home, and 30 times higher than high-resolution weather radar antennas on aircraft. However, where interference is not a potential problem, antennas with dB gains of 40 to 45 may be preferred.

Most antennas used for high-gain applications utilize a large parabolic primary collector in one of a variety of geometries. The prime-focus antenna places the receiver directly at the focus of the parabola. The Cassegrain antenna places a convex hyperboloidal secondary reflector in front of the focus to reflect the focus back through an aperture in the primary to allow mounting the receiver behind the dish. (This is convenient since the dish is typically supported from behind as well.) The Gregorian antenna is similar to the Cassegrain antenna, except that the secondary mirror is a concave ellipsoid placed in back of the parabola's focus. An offset

parabola rotates the focus away from the center of the dish for less aperture blockage and improved mounting geometry. Cassegrain, prime focus, and offset parabolic antennas are the preferred dish geometries for the MMW communication system.

A preferred primary dish reflector is a conductive parabola. The preferred surface tolerance on the dish is about 15 thousandths of an inch (15 mils) for applications below 40 GHz, but closer to 5 mils for use at 94 GHz. Typical hydroformed aluminum dishes give 15-mil surface tolerances, although double-skinned laminates (using two aluminum layers surrounding a spacer layer) could improve this to 5 mils. The secondary reflector in the Cassegrainian geometry is a small, machined aluminum "lollipop" which can be made to 1-mil tolerance without difficulty. Mounts for secondary reflectors and receiver waveguide horns preferably comprise mechanical fine-tuning adjustment for in-situ alignment on an antenna test range.

Flat Panel Antenna

Another preferred antenna for long-range MMW communication is a flat-panel slot array antenna such as that described by one of the present inventors and others in U.S. Patent No. 6,037,908, issued 14 March 2000, which is hereby incorporated herein by reference. That antenna is a planar phased array antenna propagating a traveling wave through the radiating aperture in a transverse electromagnetic (TEM) mode. A communications antenna would comprise a variant of that antenna incorporating the planar phased array, but eliminating the frequency-scanning characteristics of the antenna in the prior art by adding a hybrid traveling-wave/corporate feed. Flat plates holding a 5-mil surface tolerance are substantially cheaper and easier to fabricate than parabolic surfaces. Planar slot arrays utilize circuit-board processing techniques (e.g. photolithography), which are inherently very precise, rather than expensive high-precision machining.

Coarse and Fine Pointing

Pointing a high-gain antenna requires coarse and fine positioning. Coarse positioning can be accomplished initially using a visual sight such as a bore-sighted rifle scope or laser pointer. The antenna is locked in its final coarse position prior to fine-tuning. The fine adjustment is performed with the remote transmitter turned on. A power

meter connected to the receiver is monitored for maximum power as the fine positioner is adjusted and locked down.

At gain levels above 50 dB, wind loading and tower or building flexure can cause an unacceptable level of beam wander. A flimsy antenna mount could not only result in loss of service to a wireless customer; it could inadvertently cause interference with other licensed beam paths. In order to maintain transmission only within a specific "pipe," some method for electronic beam steering may be required.

Beam Steering

Phased-array beam combining from several ports in the flat-panel phased array could steer the beam over many antenna beam widths without mechanically rotating the antenna itself. Sum-and-difference phase combining in a mono-pulse receiver configuration locates and locks on the proper "pipe." In a Cassegrain antenna, a rotating, slightly unbalanced secondary ("conical scan") could mechanically steer the beam without moving the large primary dish. For prime focus and offset parabolas, a multi-aperture (e.g. quad-cell) floating focus could be used with a selectable switching array. In these dish architectures, beam tracking is based upon maximizing signal power into the receiver. In all cases, the common aperture for the receiver and transmitter ensures that the transmitter, as well as the receiver, is correctly pointed.

The microwave backup links operate at approximately eight times lower frequency (8 times longer wavelength) than the millimeter wave link. Thus, at a given size, the microwave antennas have broader beam widths than the millimeter-wave antennas, again wider by about 8 times. A typical beam width from a 2-foot antenna is about 7.5 degrees. This angle is wider than the angular separation of four service customers from the relay tower and it is wider than the angular separation of the beam between the relay station and the radio antenna. Specifically, the minimum angular separation between sites serviced from the relay station is 1.9 degrees. The angular separation between receivers at radio antenna tower 79 and relay station 76 is 4.7 degrees as seen from a transmitter at facility 70. Thus, these microwave beams cannot be separated spatially; however, the FCC Part 101 licensing rules mandate the use of twelve separate transmit and twelve separate receive channels within the microwave 10.7 to 11.7 GHz band, so these microwave beams can be separated spectrally. Thus, the

FCC sponsored frequency coordination between the links to individual sites and between the links to the relay station and the radio antenna will guarantee non-interference, but at a much reduced data rate. The FCC has appointed a Band Manager, who oversees the combined spatial and frequency coordination during the licensing process.

Other Wireless Techniques

Any millimeter-wave carrier frequency consistent with U.S. Federal Communications Commission spectrum allocations and service rules, including MMW bands currently allocated for fixed point-to-point services at 57-64 GHz, 71-76 GHz, 81-86 GHz, and 92-100 GHz, can be utilized in the practice of this invention. Likewise any of the several currently-allocated microwave bands, including 5.2-5.9 GHz, 5.9-6.9 GHz, 10.7-11.7 GHz, 17.7-19.7 GHz, and 21.2-23.6 GHz can be utilized for the backup link. The modulation bandwidth and modulation technique of both the MMW and microwave channels can be increased, limited again only by FCC spectrum allocations. Also, any flat, conformal, or shaped antenna capable of transmitting the modulated carrier over the link distance in a means consistent with FCC emissions regulations can be used. Horns, prime focus and offset parabolic dishes, and planar slot arrays are all included.

Transmit power may be generated with a Gunn diode source, an injection-locked amplifier or a MMW tube source resonating at the chosen carrier frequency or at any sub-harmonic of that frequency. Source power can be amplitude, frequency or phase modulated using a PIN switch, a mixer or a bi-phase or continuous phase modulator. Modulation can take the form of simple bi-state AM modulation, or can involve more than two symbol states; e.g. using quantized amplitude modulation (QAM). Double-sideband (DSB), single-sideband (SSB) or vestigial sideband (VSB) techniques can be used to pass, suppress or reduce one AM sideband and thereby affect bandwidth efficiency. Phase or frequency modulation schemes can also be used, including simple FM, bi-phase, or quadrature phase-shift keying (QPSK). Transmission with a full or suppressed carrier can be used. Digital source modulation can be performed at any date rate in bits per second up to eight times the modulation bandwidth in Hertz, using suitable symbol transmission schemes. Analog modulation can also be

performed. A monolithic or discrete-component power amplifier can be incorporated after the modulator to boost the output power. Linear or circular polarization can be used in any combination with carrier frequencies to provide polarization and frequency diversity between transmitter and receiver channels. A pair of dishes can be used instead of a single dish to provide spatial diversity in a single transceiver as well.

The MMW Gunn diode and MMW amplifier can be made on indium phosphide, gallium arsenide, or metamorphic InP-on-GaAs. The MMW amplifier can be eliminated completely for short-range links. The mixer/downconverter can be made on a monolithic integrated circuit or fabricated from discrete mixer diodes on doped silicon, gallium arsenide, or indium phosphide. The phase lock loop can use a microprocessor-controlled quadrature (I/Q) comparator or a scanning filter. The detector can be fabricated on silicon or gallium arsenide, or can comprise a heterostructure diode using indium antimonide.

The backup transceivers can use alternative bands 5.9-6.9 GHz, 17.7-19.7 GHz, or 21.2-23.6 GHz; all of which are covered under FCC Part 101 licensing regulations. The antennas can be Cassegrainian, offset or prime focus dishes, or flat panel slot array antennas, of any size appropriate to achieve suitable gain.

Prefabricated Cellular Base Station

In a preferred embodiment a prefabricated base station is provided for quick and easy installation on commercial building roof-tops. All of the components of the base station as described above are pre-assembled in the prefabricated station. These components include the cellular transceiver for communication with users and the millimeter wave transceiver for operation as a part of the trunk line as described above.

While the above description contains many specifications, the reader should not construe these as a limitation on the scope of the invention, but merely as

exemplifications of preferred embodiments thereof. For example, the 71.0-76 GHz and 81.0 to 86 GHz bands utilized for point to point trunk lines would work very well in the above applications. The present invention is especially useful in those locations where fiber optics communication is not available and the distances between communications sites are less than about 15 miles but longer than the distances that could be reasonably served with free space laser communication devices. Ranges of about 1 mile to about 10 miles are ideal for the application of the present invention. However, in regions with mostly clear weather the system could provide good service to distances of 20 miles or more. Accordingly the reader is requested to determine the scope of the invention by the appended claims and their legal equivalents, and not by the examples given above.

What is claimed is:

1. A cellular communications system providing wireless communication with system users and having a wireless millimeter wave trunk line for communicating with a telephone communication office, said system comprising:
   A) a plurality of cellular base stations each of said base stations serving a communication cell, each of said base stations comprising:
      1) a low frequency transceiver for communicating with users within said cell at a cell phone radio frequency lower than 3 GHz,
      2) a high frequency transceiver for communicating with other base stations and the communications office as a part of said trunk line at a trunk line frequency higher than 60 GHz, said high frequency transceiver having up-converting equipment for converting said cell phone radio frequency to said trunk line frequency and down-converting equipment for down converting said trunk line frequency to said cell phone frequency.
   B) at least one communications telephone office high frequency transceiver operating as a part of said trunk line in communication with said plurality of high frequency transceivers and the communications office at a frequency higher than 60 GHz.
2. A cellular communication system as in Claim 1 wherein each of said base station transceivers is configured to transmit to and receive from a second site through atmosphere digital information at rates in excess of 1 billion bits per second during normal weather said first transceiver comprising an antenna producing a beam having a half-power beam width of about 2 degrees or less.
3. A system as in Claim 1 wherein one of said high frequency transceivers are configured to transmit at frequencies in the range of about 92.3 to 93.2 GHz and to receive information at frequencies in the range of about 94.1 to 95.0 GHz.
4. A system as in Claim 1 and further comprising a back-up transceiver system operating at a data transmittal rate of less than 155 million bits per second configured continue transmittal of information between said first and second sites in the event of abnormal weather conditions.
5. A system as in Claim 4 wherein said backup transceiver system is a microwave system.

6. A system as in Claim 4 wherein said backup transceiver system is configured to operate in the frequency range of 10.7 to 11.7 GHz.
7. A system as in Claim 4 wherein said backup transceiver system is configured to operate in the frequency range of 5.9 to 6.9 GHz.
8. A system as in Claim 4 wherein said backup transceiver system is configured to operate in the frequency range of 13 to 23 GHz.
9. A system as in Claim 1 wherein both said high frequency transceivers are equipped with antennas providing a gain of greater than 40 dB.
10. A system as in Claim 9 wherein at least one of said antennas is a flat panel antenna.
11. A system as in Claim 9 wherein at least one of said antennas is a Cassegrain antenna.
12. A system as in Claim 9 wherein at least one of said antennas is a prime focus parabolic antenna.
13. A system as in Claim 9 wherein at least one of said antennas is an offset parabolic antenna.
14. A system as in Claim 1 wherein said high frequency transceivers are capable of transmitting and receiving at rates in excess of 1 billion bits per second and the antennas of both systems are configured to produce beam having half-power beam widths of about 0.36 degrees or less.
15. A system as in Claim 1 wherein one of said high frequency transceivers are configured to transmit at frequencies in the range of about 71-76 GHz.
16. A system as in Claim 1 wherein one of said high frequency transceivers are configured to transmit at frequencies in the range of about 81-86 GHz.

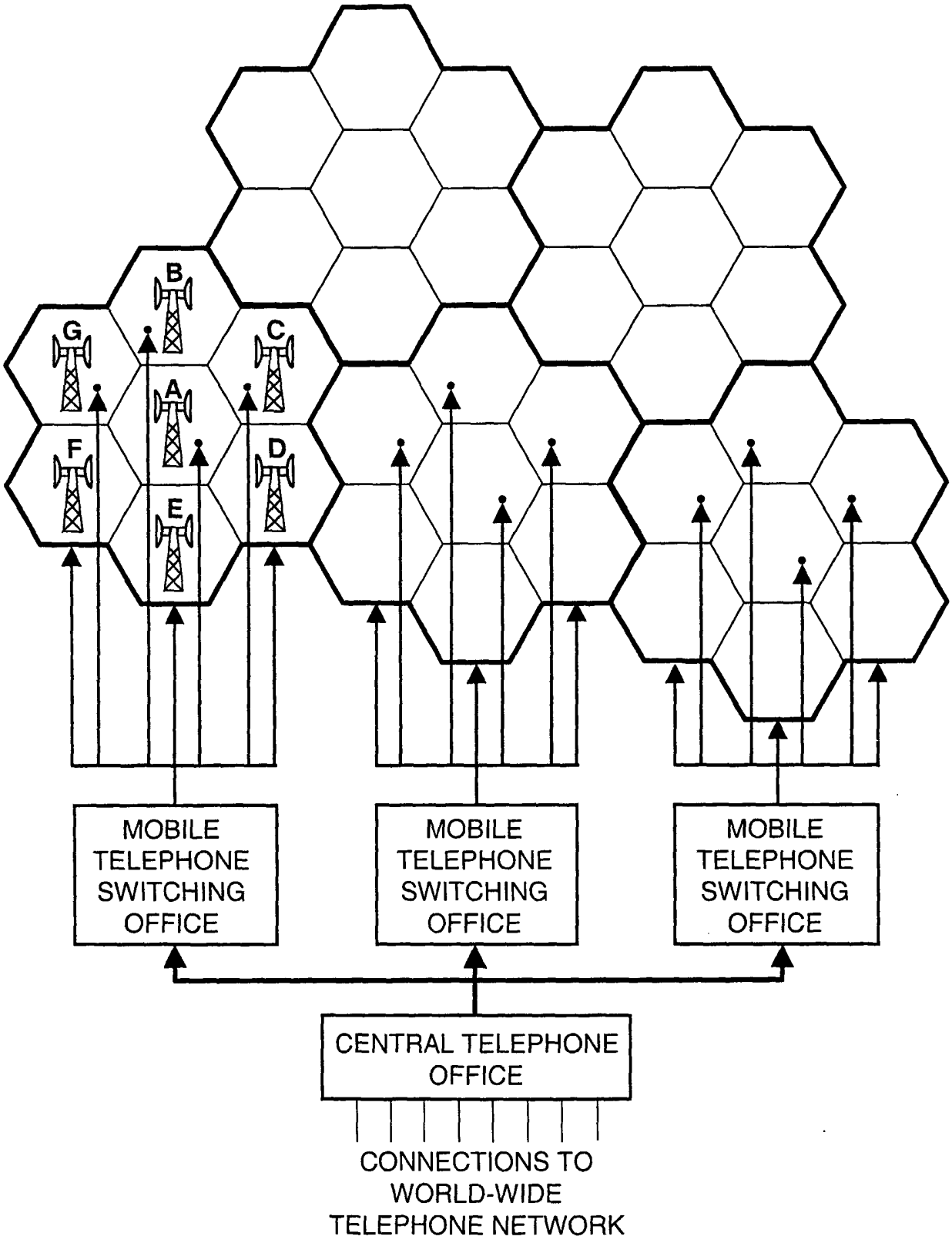
B
G
C
A
F
D
E
MOBILE TELEPHONE SWITCHING OFFICE
MOBILE TELEPHONE SWITCHING OFFICE
MOBILE TELEPHONE SWITCHING OFFICE
CENTRAL TELEPHONE OFFICE
CONNECTIONS TO WORLD-WIDE TELEPHONE NETWORK

FIG. 1

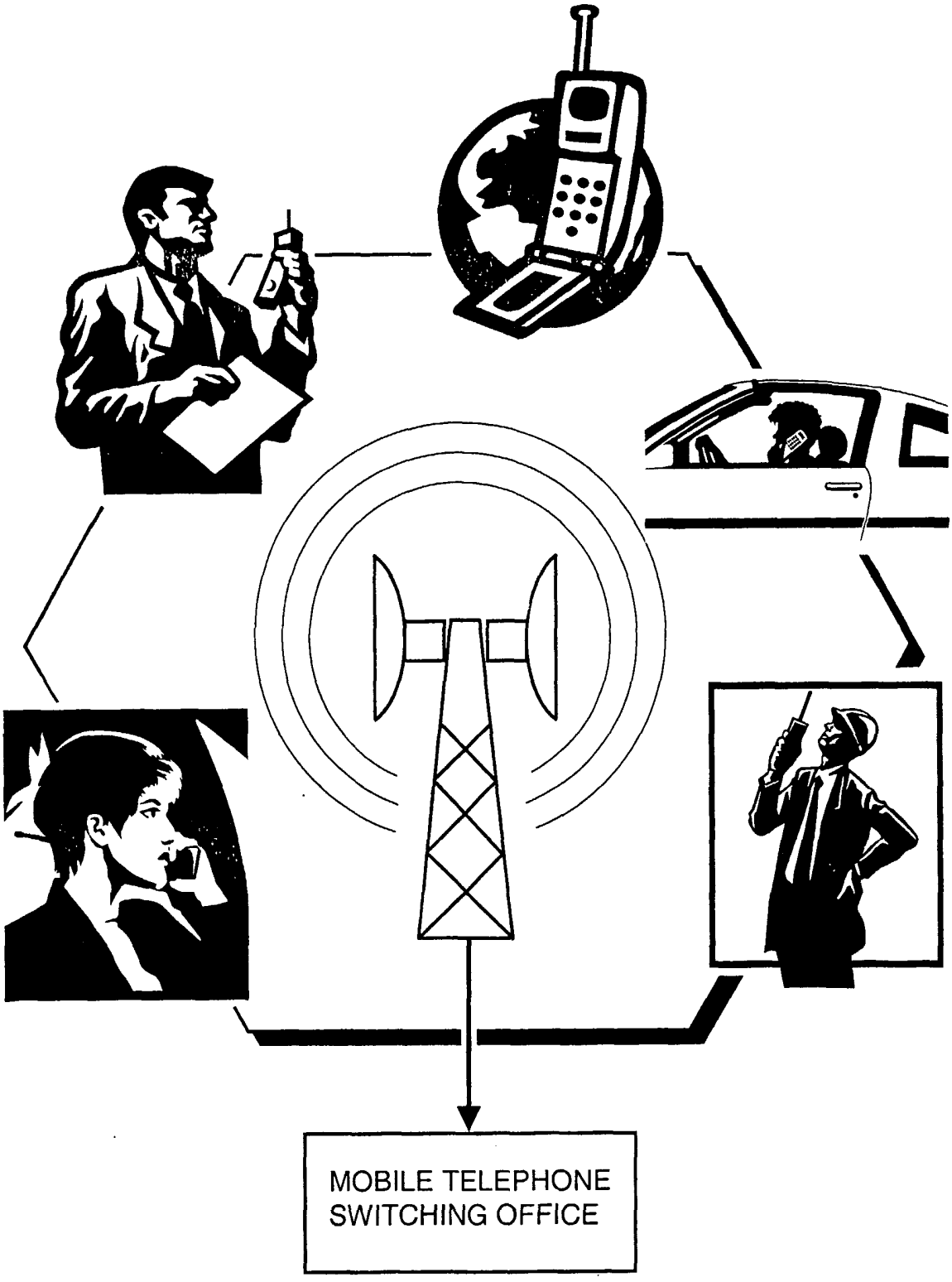

FIG. 2

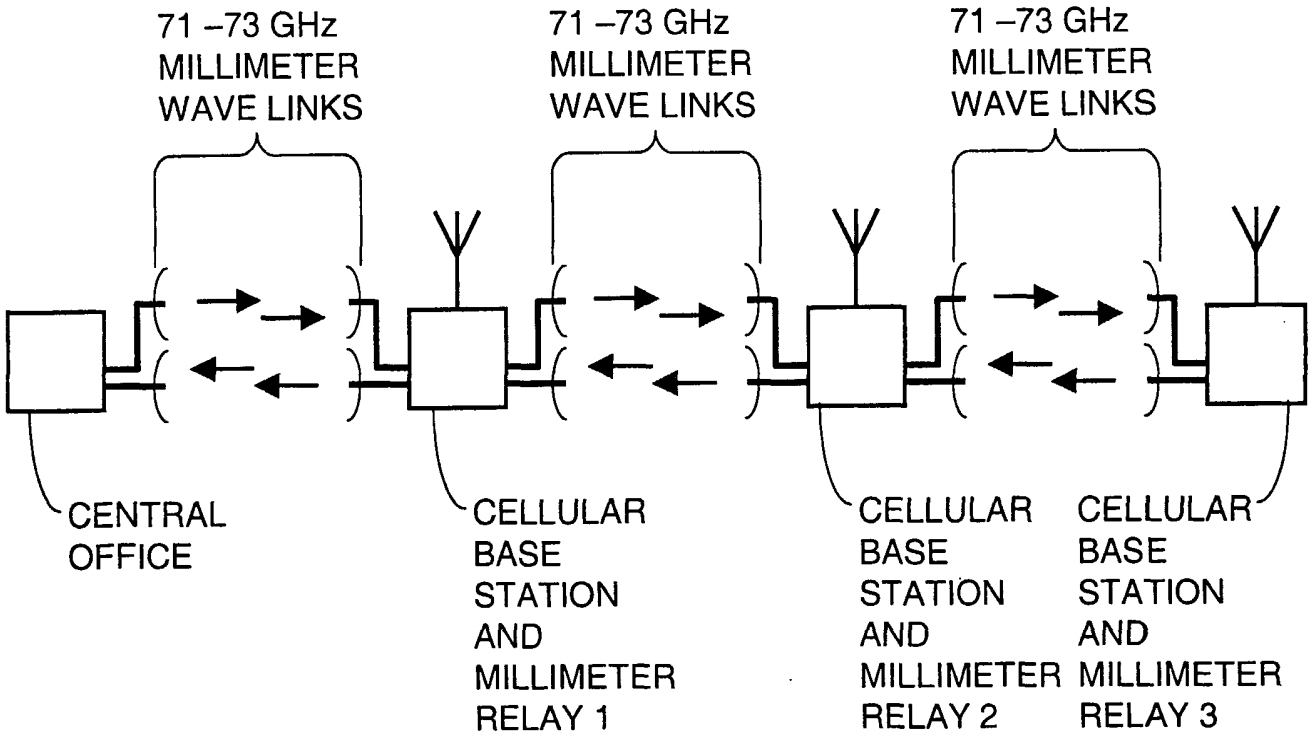
71 –73 GHz
MILLIMETER
WAVE LINKS
71 –73 GHz
MILLIMETER
WAVE LINKS
71 –73 GHz
MILLIMETER
WAVE LINKS
CENTRAL
OFFICE
CELLULAR
BASE
STATION
AND
MILLIMETER
RELAY 1
CELLULAR
BASE
STATION
AND
MILLIMETER
RELAY 2
CELLULAR
BASE
STATION
AND
MILLIMETER
RELAY 3

FIG. 3

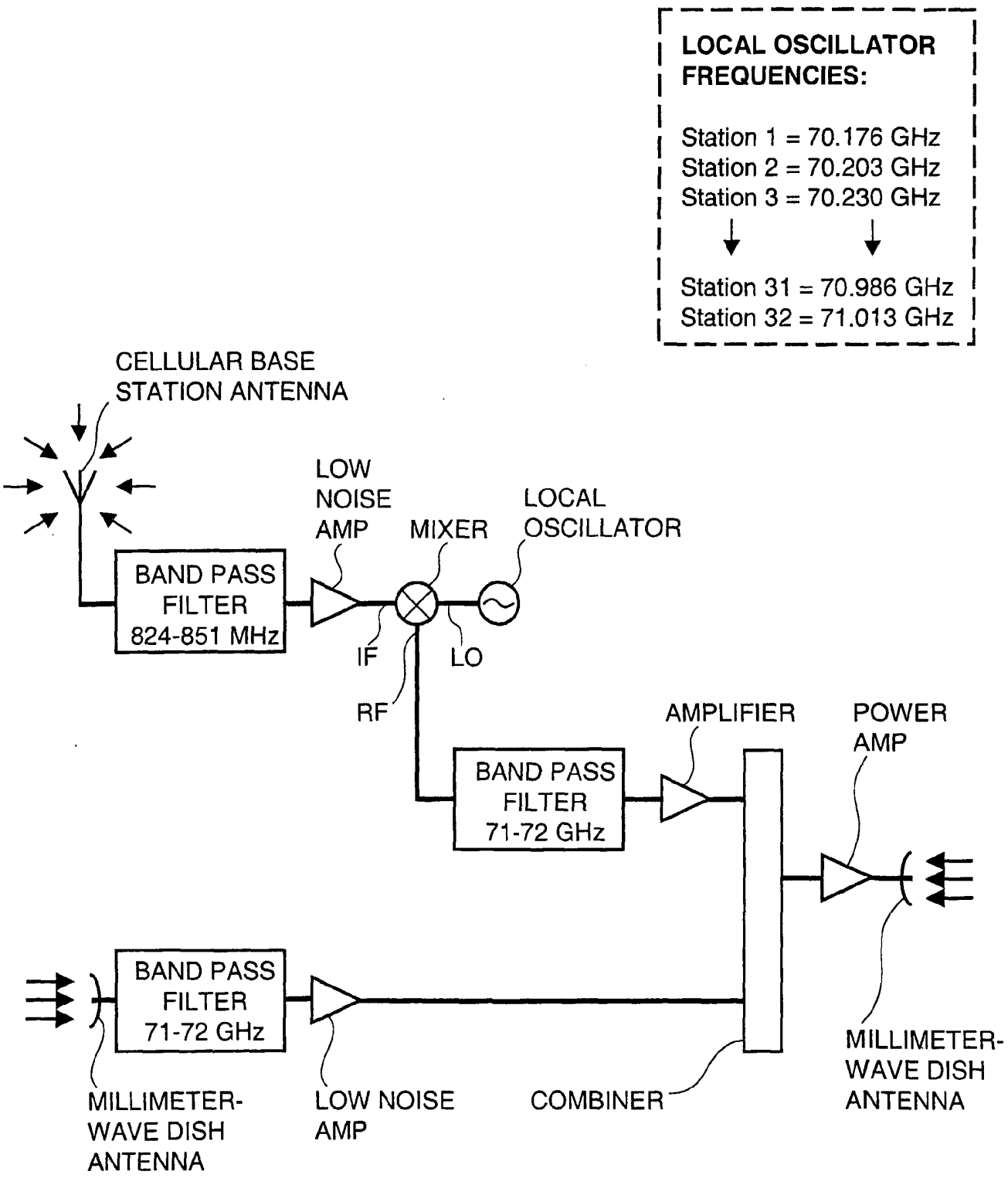
LOCAL OSCILLATOR FREQUENCIES:
Station 1 = 70.176 GHz
Station 2 = 70.203 GHz
Station 3 = 70.230 GHz
Station 31 = 70.986 GHz
Station 32 = 71.013 GHz
CELLULAR BASE STATION ANTENNA
LOW NOISE AMP
MIXER
LOCAL OSCILLATOR
BAND PASS FILTER 824-851 MHz
IF
LO
RF
AMPLIFIER
POWER AMP
BAND PASS FILTER 71-72 GHz
BAND PASS FILTER 71-72 GHz
MILLIMETER-WAVE DISH ANTENNA
LOW NOISE AMP
COMBINER
MILLIMETER-WAVE DISH ANTENNA

FIG. 4

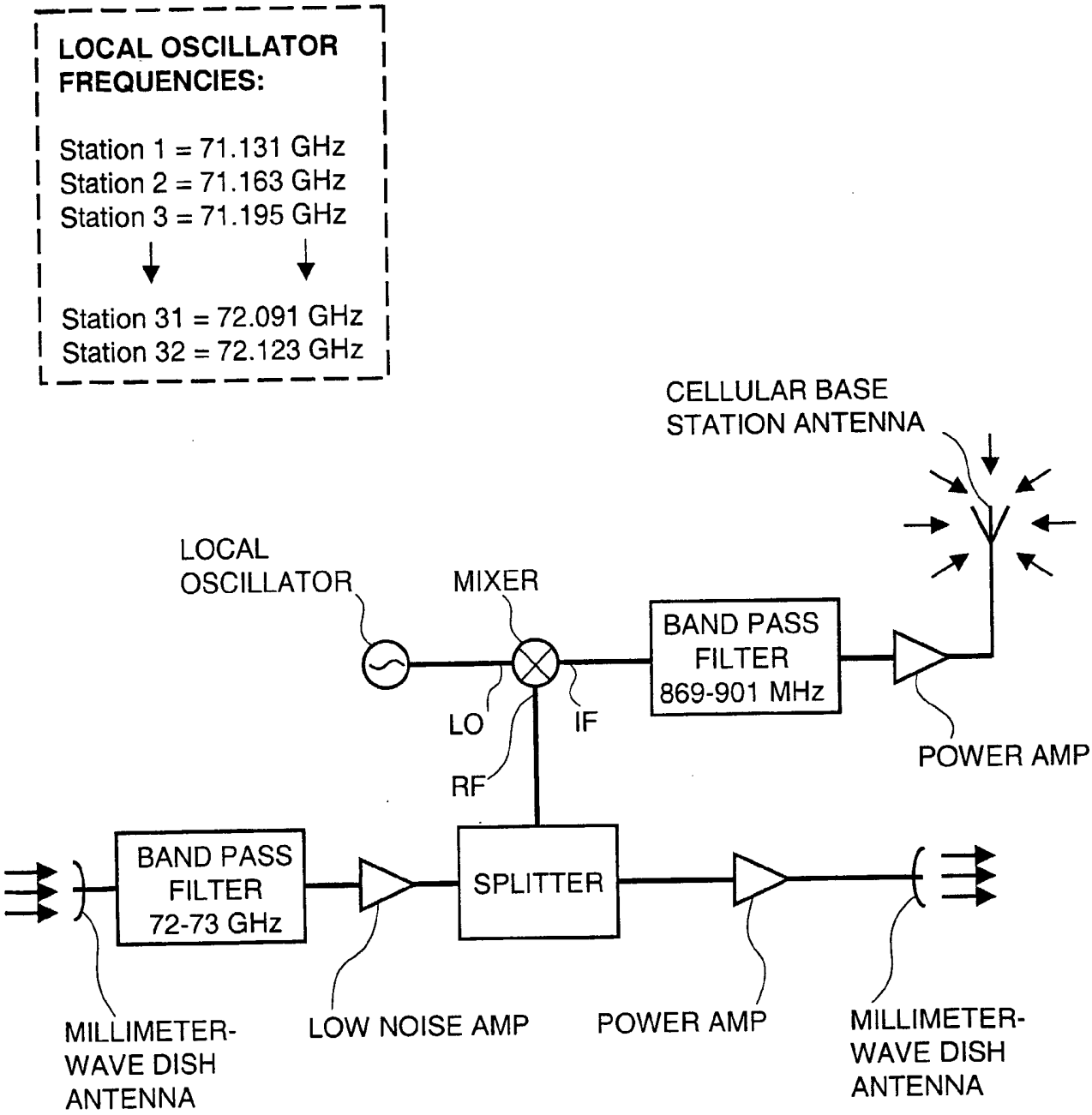
LOCAL OSCILLATOR FREQUENCIES:
Station 1 = 71.131 GHz
Station 2 = 71.163 GHz
Station 3 = 71.195 GHz
Station 31 = 72.091 GHz
Station 32 = 72.123 GHz
CELLULAR BASE STATION ANTENNA
LOCAL OSCILLATOR
MIXER
BAND PASS FILTER 869-901 MHz
LO
IF
RF
POWER AMP
BAND PASS FILTER 72-73 GHz
SPLITTER
MILLIMETER-WAVE DISH ANTENNA
LOW NOISE AMP
POWER AMP
MILLIMETER-WAVE DISH ANTENNA

FIG. 5

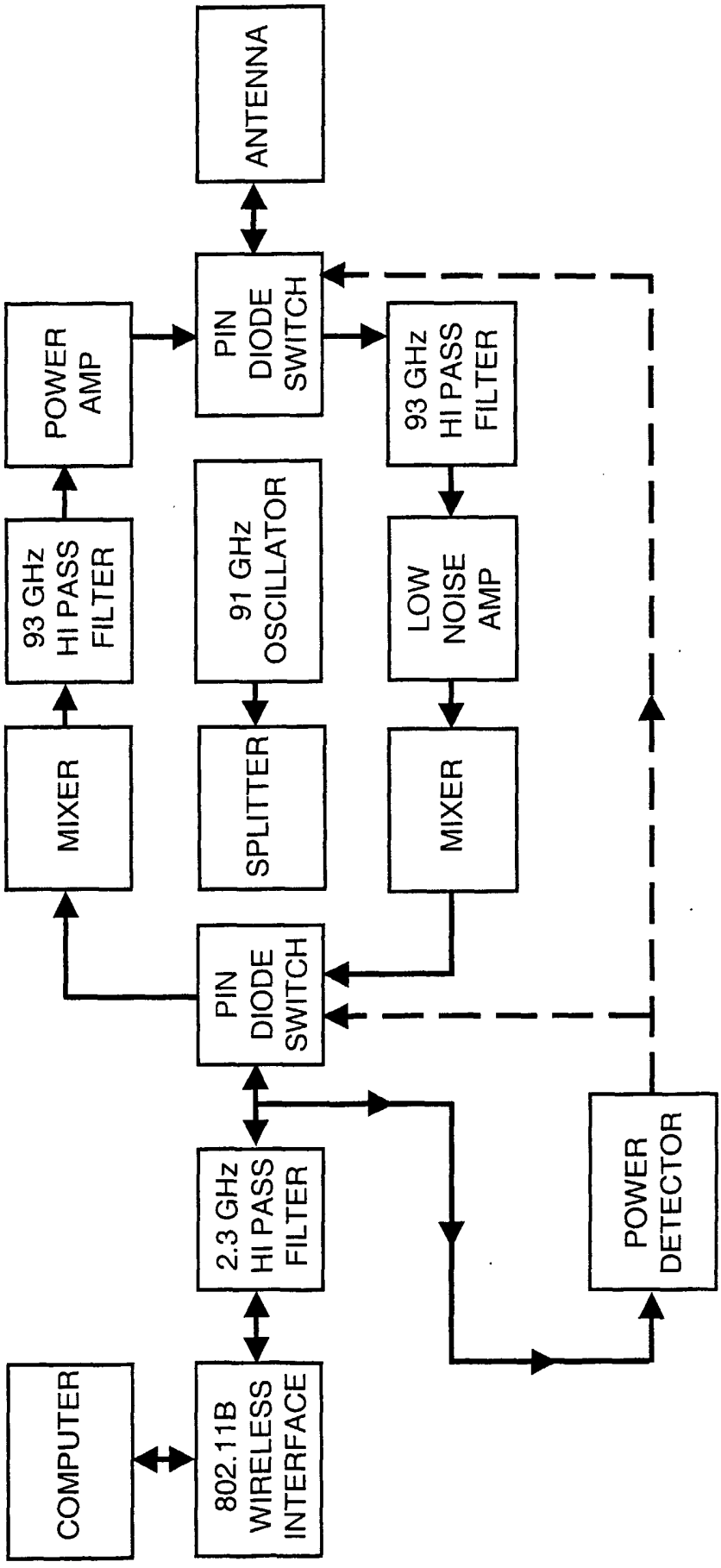
ANTENNA
PIN DIODE SWITCH
POWER AMP
93 GHz HI PASS FILTER
91 GHz OSCILLATOR
93 GHz HI PASS FILTER
LOW NOISE AMP
MIXER
SPLITTER
MIXER
PIN DIODE SWITCH
2.3 GHz HI PASS FILTER
POWER DETECTOR
COMPUTER
802.11B WIRELESS INTERFACE

FIG. 6

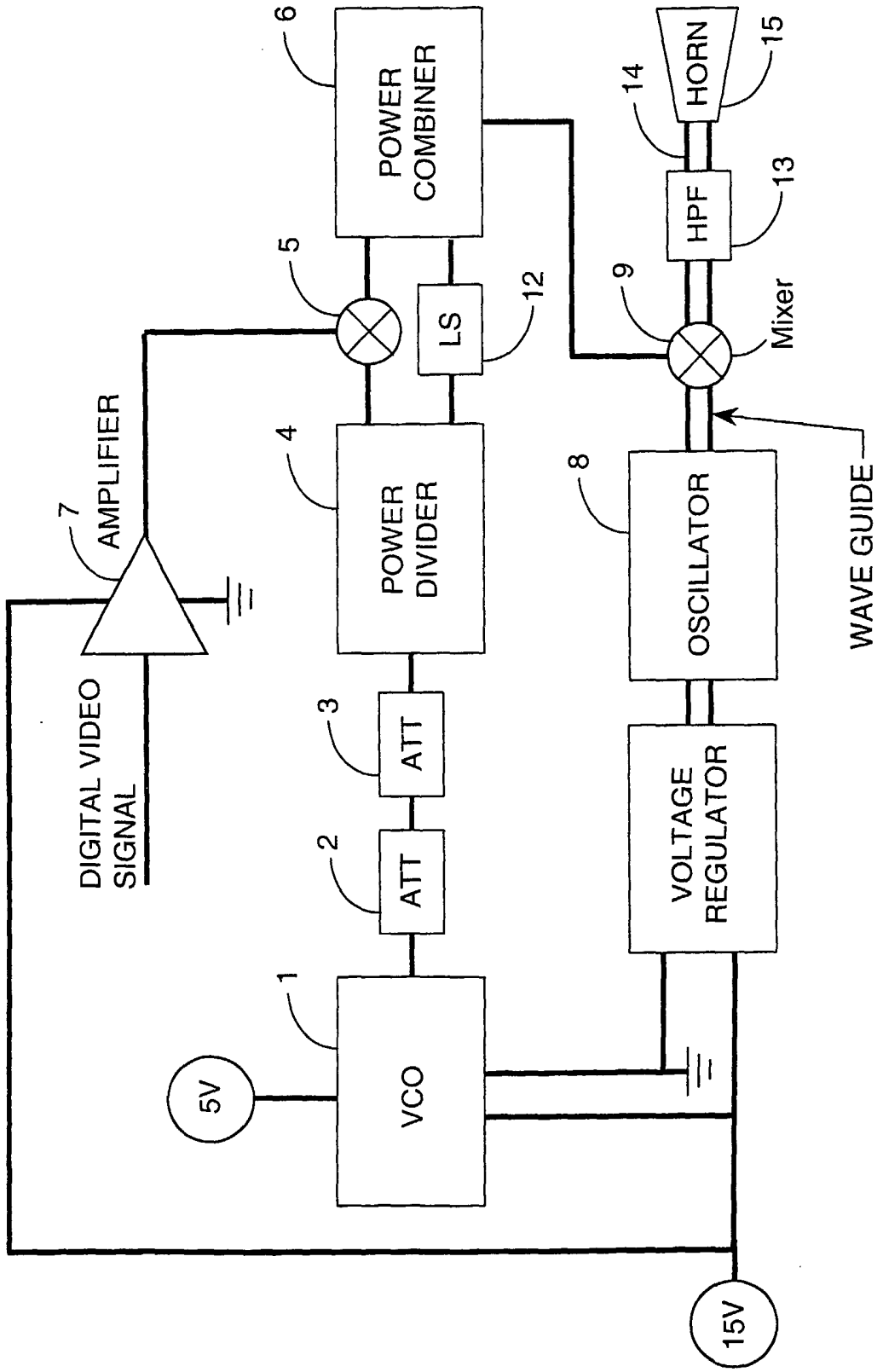
VCO
1
5V
ATT
2
ATT
3
POWER DIVIDER
4
POWER COMBINER
6
5
LS
12
AMPLIFIER
7
DIGITAL VIDEO SIGNAL
OSCILLATOR
8
VOLTAGE REGULATOR
9
Mixer
HPF
13
HORN
14
15
WAVE GUIDE
15V

FIG. 7

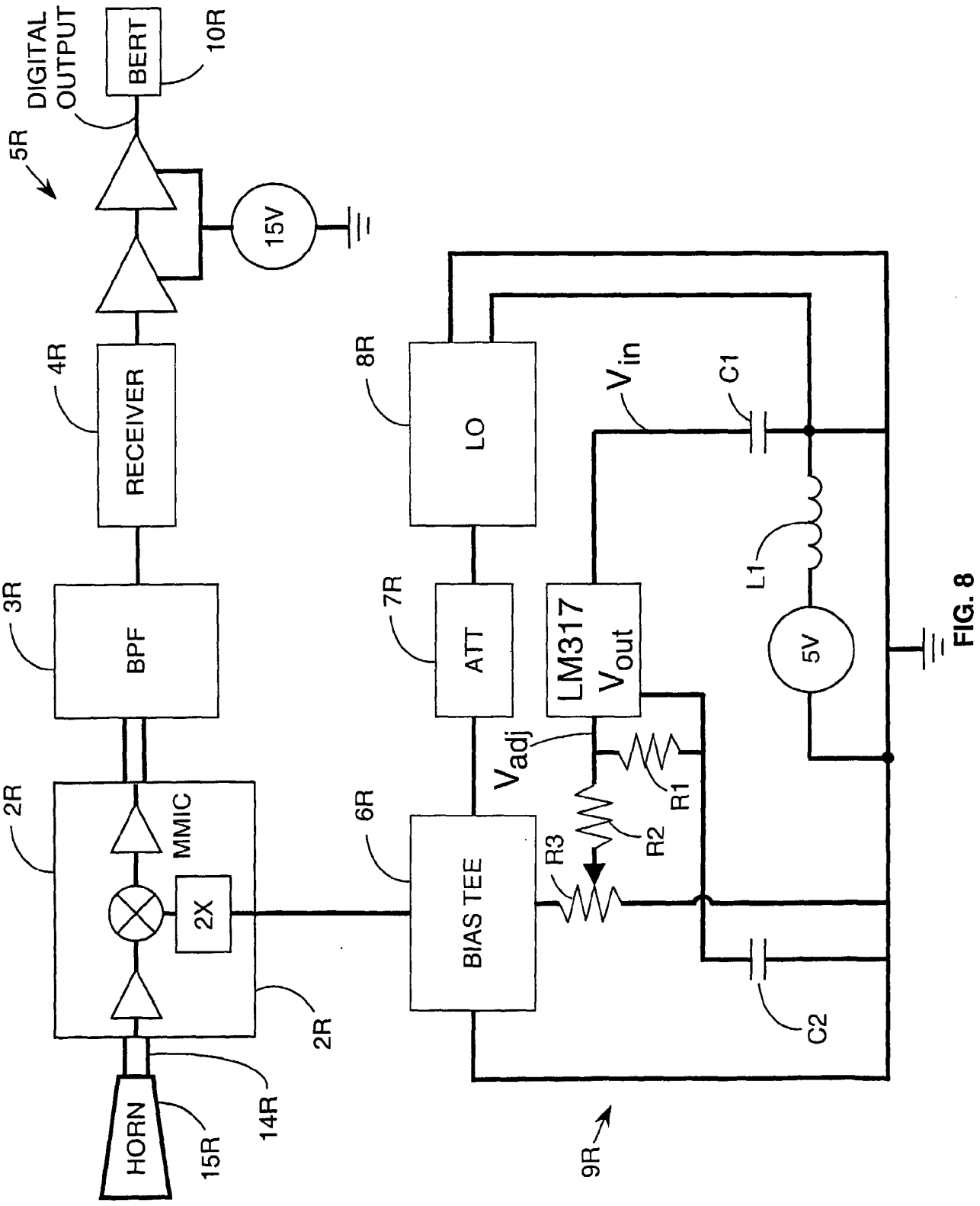
DIGITAL OUTPUT
BERT
10R
5R
15V
4R
RECEIVER
3R
BPF
2R
MMIC
2X
HORN
15R
14R
2R
8R
LO
7R
ATT
6R
BIAS TEE
V_{adj}
V_{in}
LM317
V_{out}
C1
L1
5V
R1
R2
R3
C2
9R

FIG. 8

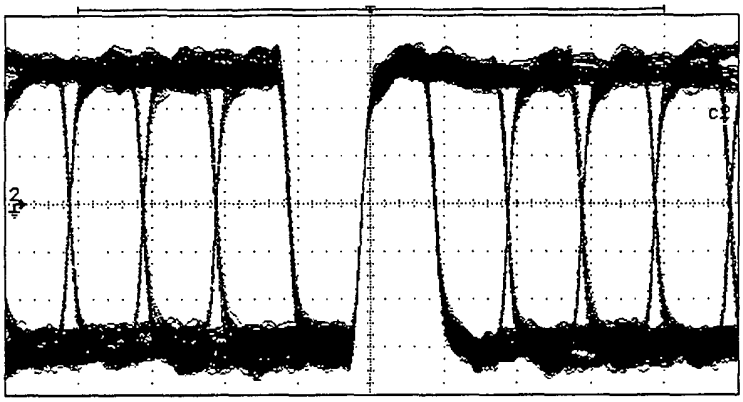

-24.000 ns 1.000 ns 26.000 ns
5.00 ns/div Real time
2 200 mV/
0.00000 V

RECEIVER SIGNAL FROM BERT 200

FIG. 9

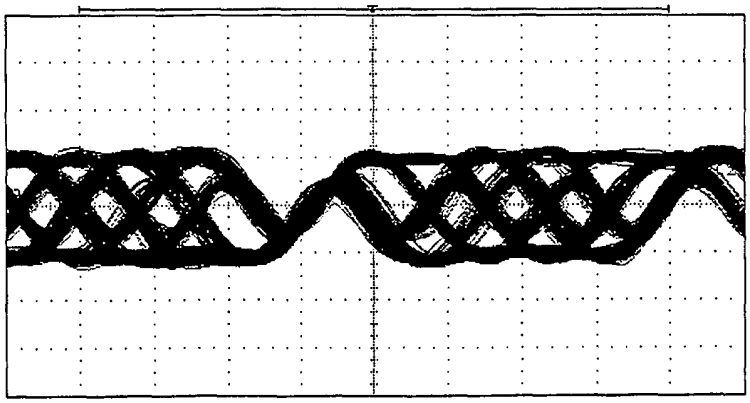

-4.000 ns 1.000 ns 6.000 ns
1.00 ns/div Real time
2 500 mV/
0.00000 V

RECEIVER SIGNAL FROM BERT 200

FIG. 10

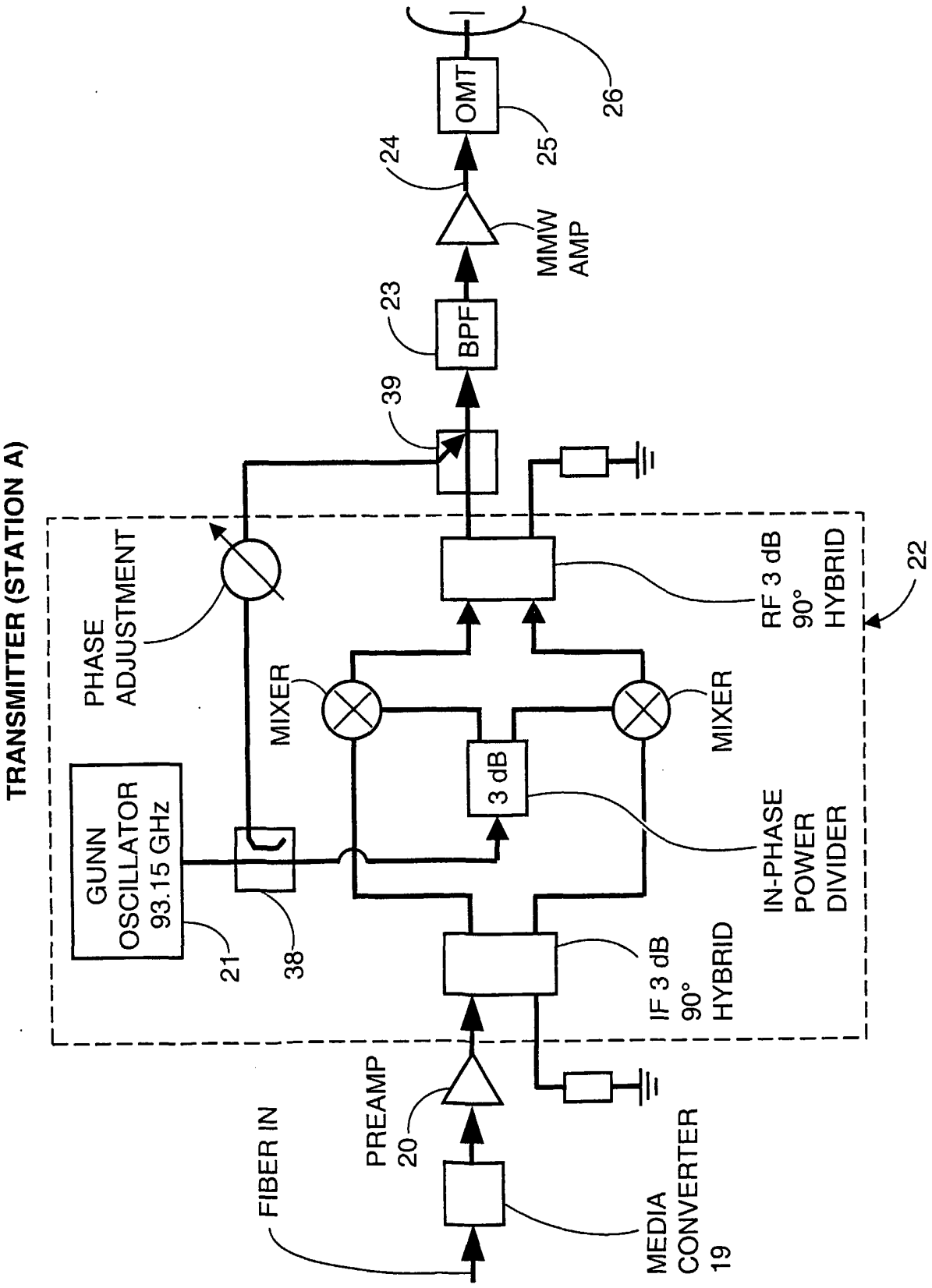
TRANSMITTER (STATION A)
FIBER IN
MEDIA CONVERTER 19
PREAMP 20
GUNN OSCILLATOR 93.15 GHz
21
38
PHASE ADJUSTMENT
MIXER
3 dB
MIXER
IF 3 dB 90° HYBRID
IN-PHASE POWER DIVIDER
RF 3 dB 90° HYBRID
22
39
BPF
23
MMW AMP
24
OMT
25
26

FIG. 11A

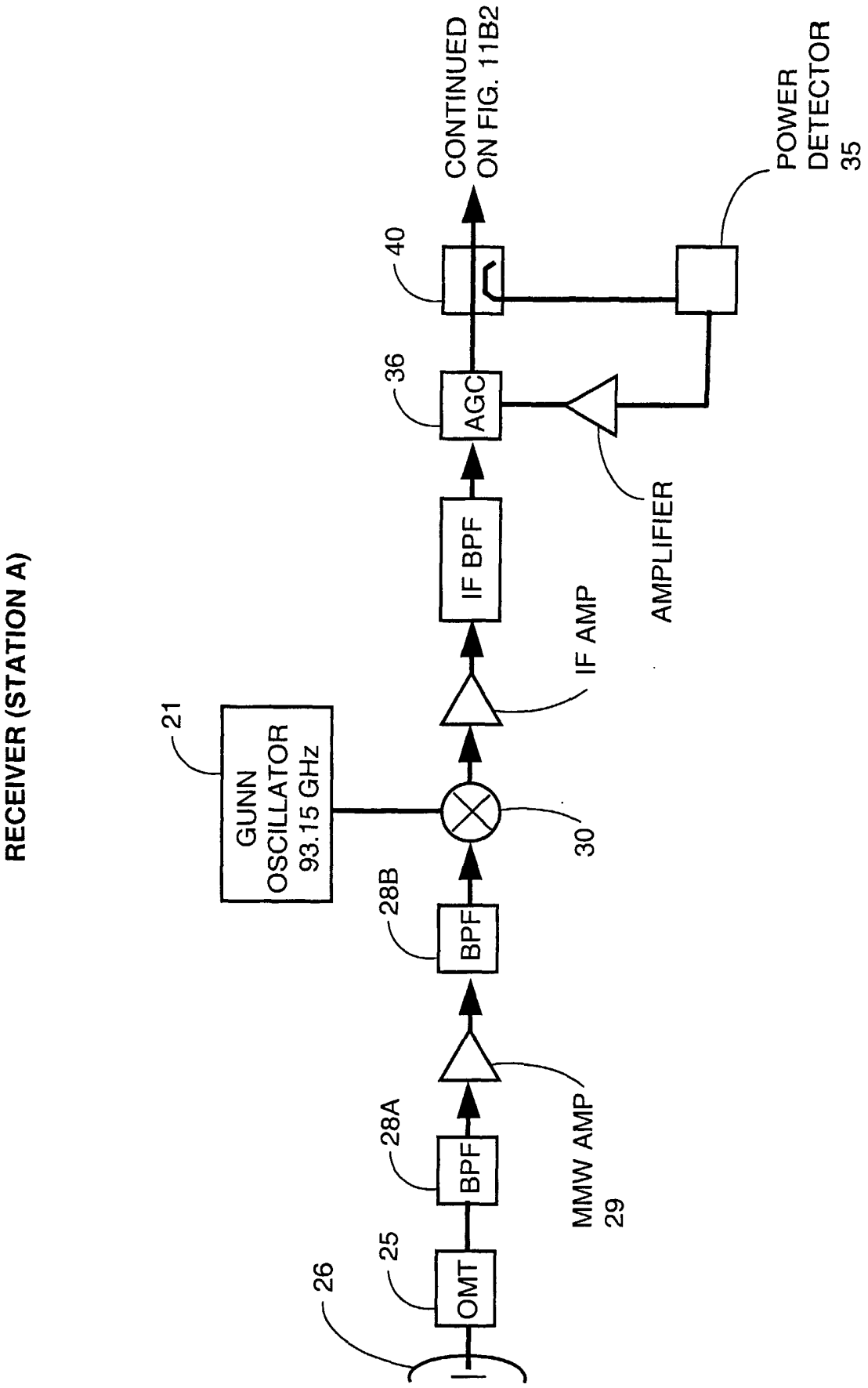
RECEIVER (STATION A)
26
25
OMT
28A
BPF
MMW AMP
29
28B
BPF
21
GUNN
OSCILLATOR
93.15 GHz
30
IF AMP
IF BPF
AMPLIFIER
36
AGC
40
CONTINUED
ON FIG. 11B2
POWER
DETECTOR
35

FIG. 11B1

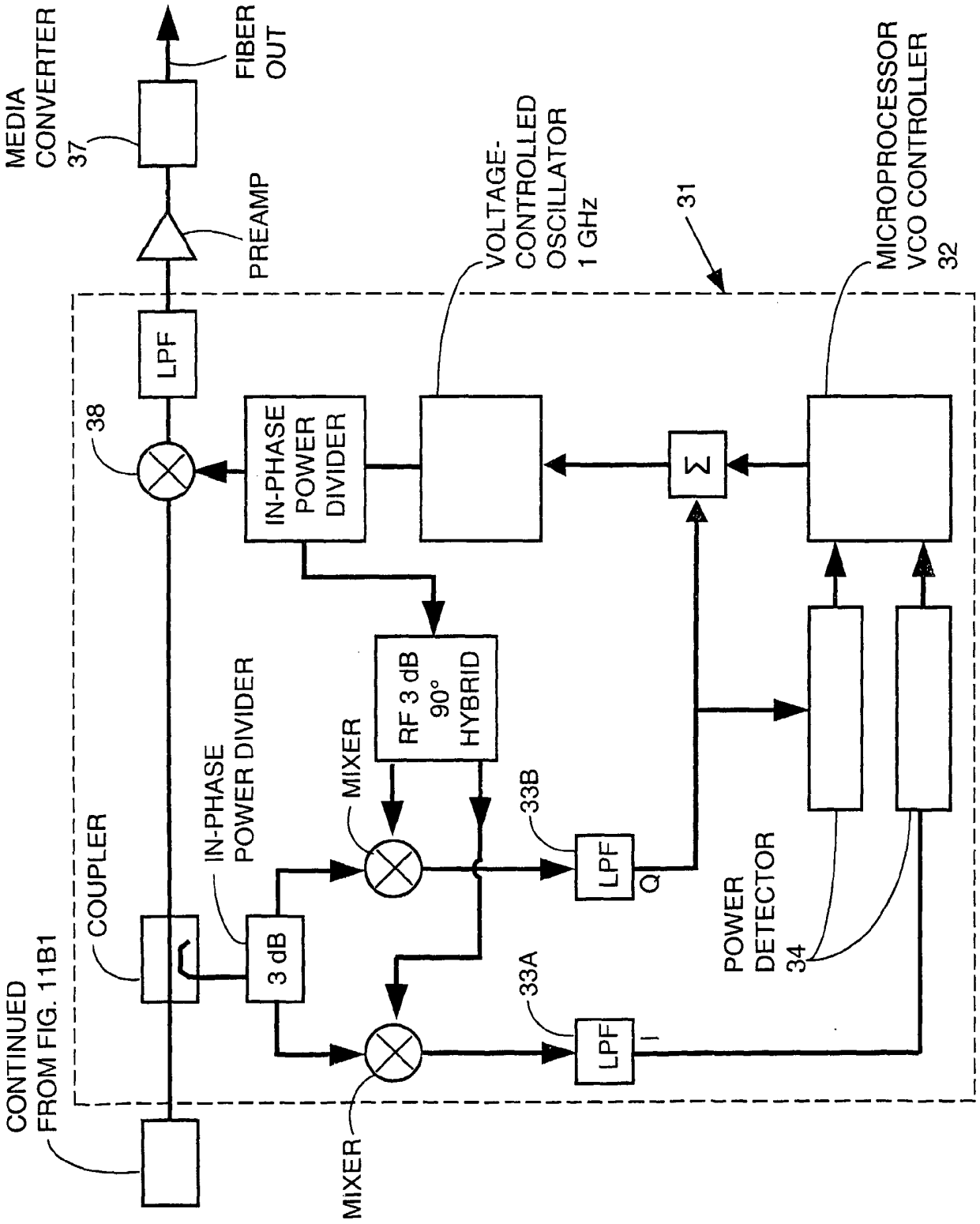
MEDIA CONVERTER 37
FIBER OUT
PREAMP
LPF
38
IN-PHASE POWER DIVIDER
VOLTAGE-CONTROLLED OSCILLATOR 1 GHz
31
MICROPROCESSOR VCO CONTROLLER 32
Σ
RF 3 dB 90° HYBRID
MIXER
33B
LPF
Q
IN-PHASE POWER DIVIDER
COUPLER
3 dB
33A
LPF
I
POWER DETECTOR
34
CONTINUED FROM FIG. 11B1
MIXER

FIG. 11B2

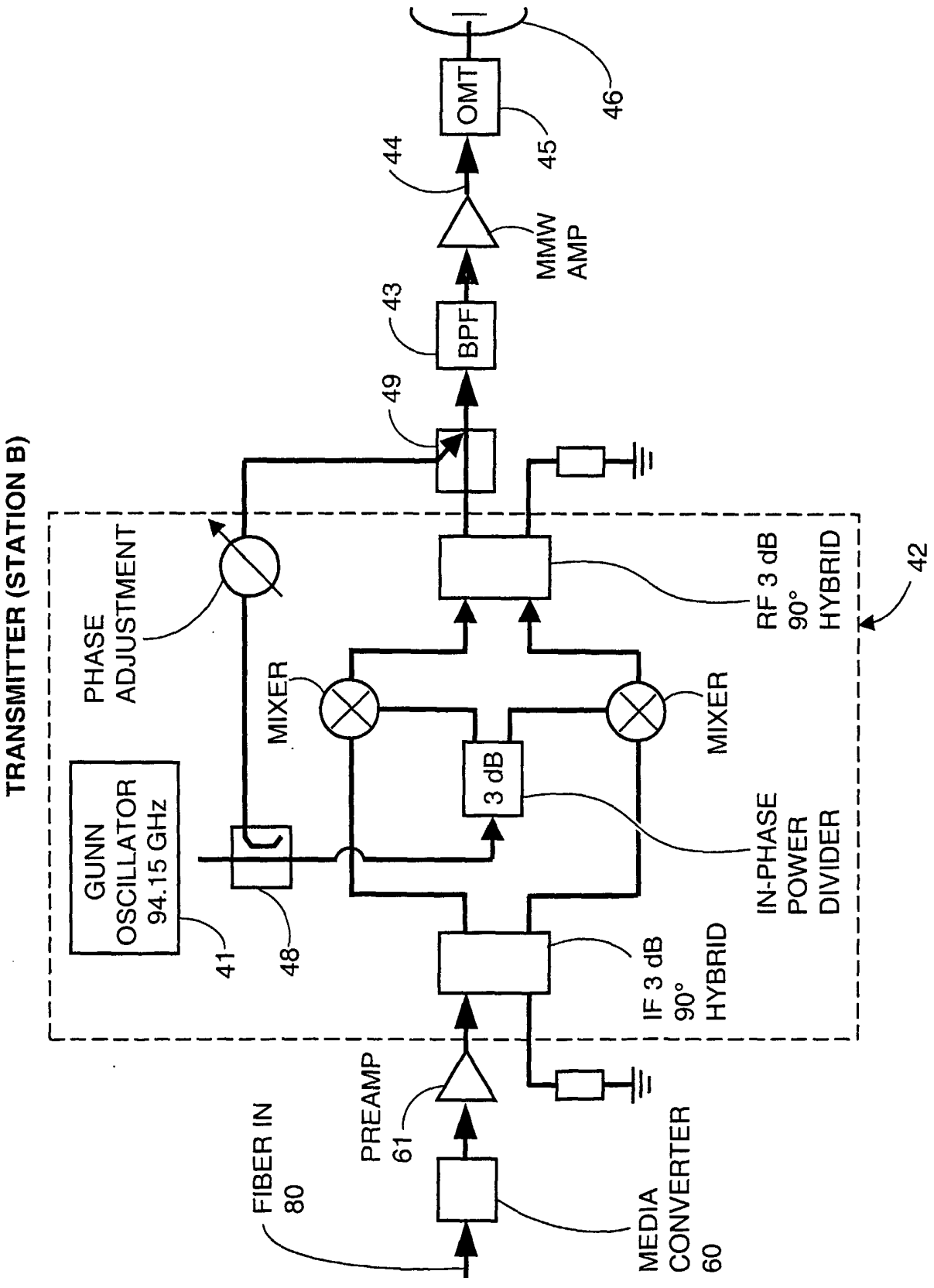
TRANSMITTER (STATION B)
FIBER IN
80
MEDIA
CONVERTER
60
PREAMP
61
IF 3 dB
90°
HYBRID
IN-PHASE
POWER
DIVIDER
3 dB
MIXER
MIXER
RF 3 dB
90°
HYBRID
42
PHASE
ADJUSTMENT
GUNN
OSCILLATOR
94.15 GHz
41
48
49
BPF
43
MMW
AMP
44
OMT
45
46

FIG. 12A

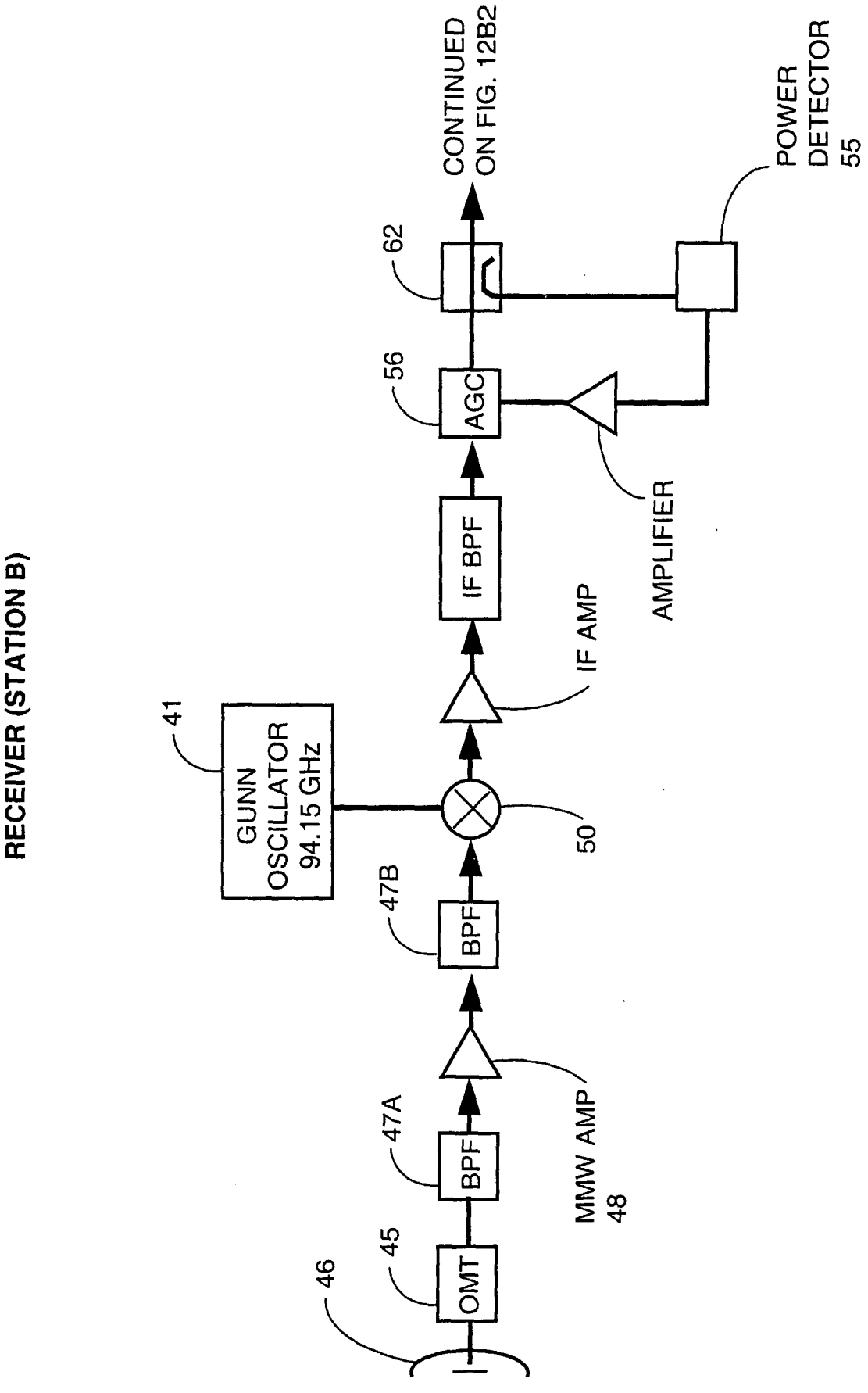
RECEIVER (STATION B)
46
45
OMT
47A
BPF
MMW AMP
48
47B
BPF
41
GUNN
OSCILLATOR
94.15 GHz
50
IF AMP
IF BPF
56
AGC
AMPLIFIER
62
CONTINUED
ON FIG. 12B2
POWER
DETECTOR
55

FIG. 12B1

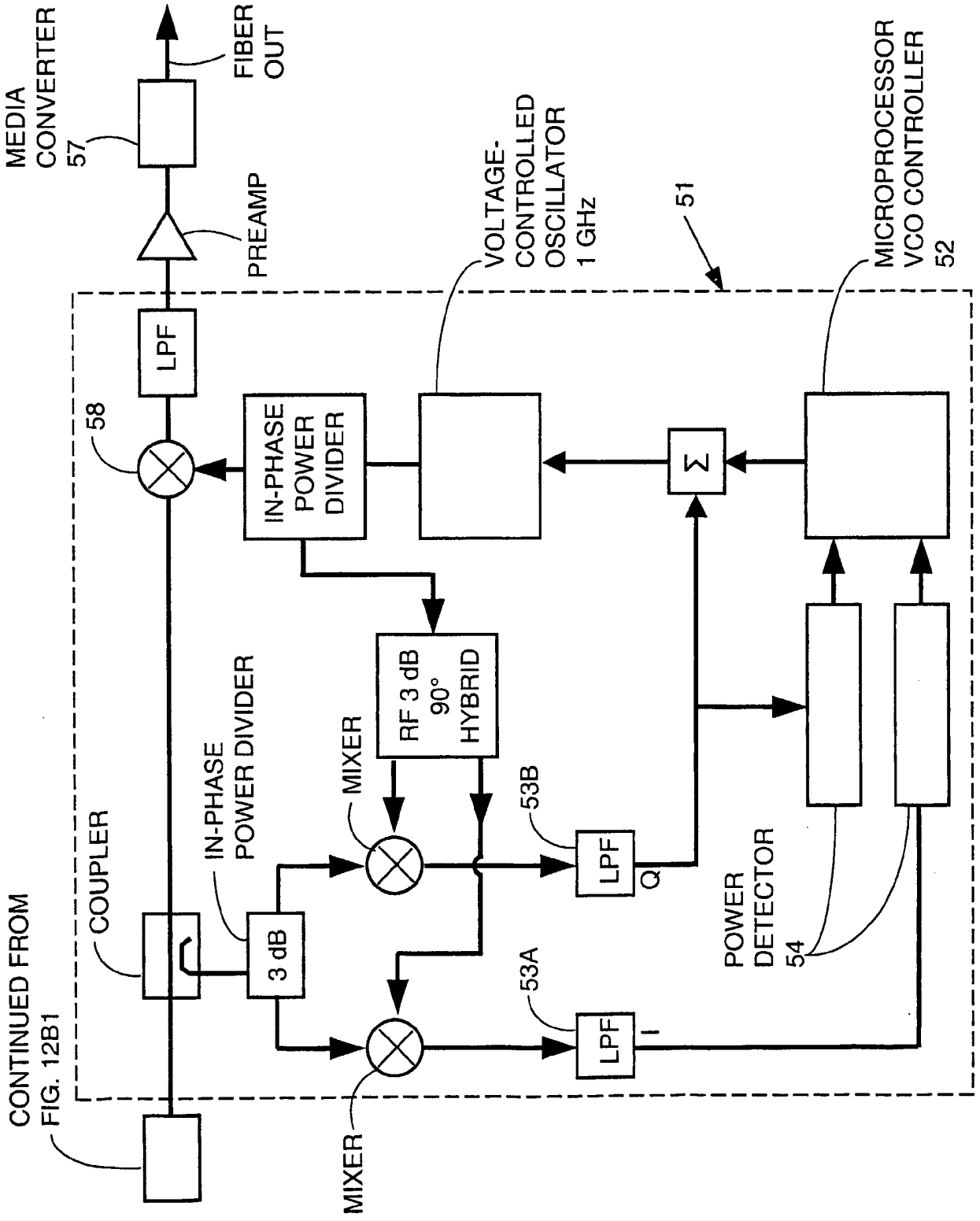
MEDIA CONVERTER 57
FIBER OUT
PREAMP
LPF
58
IN-PHASE POWER DIVIDER
VOLTAGE-CONTROLLED OSCILLATOR 1 GHz
51
MICROPROCESSOR VCO CONTROLLER 52
Σ
RF 3 dB 90° HYBRID
MIXER
53B
LPF
Q
IN-PHASE POWER DIVIDER
COUPLER
3 dB
53A
LPF
I
POWER DETECTOR 54
CONTINUED FROM FIG. 12B1
MIXER

FIG. 12B2

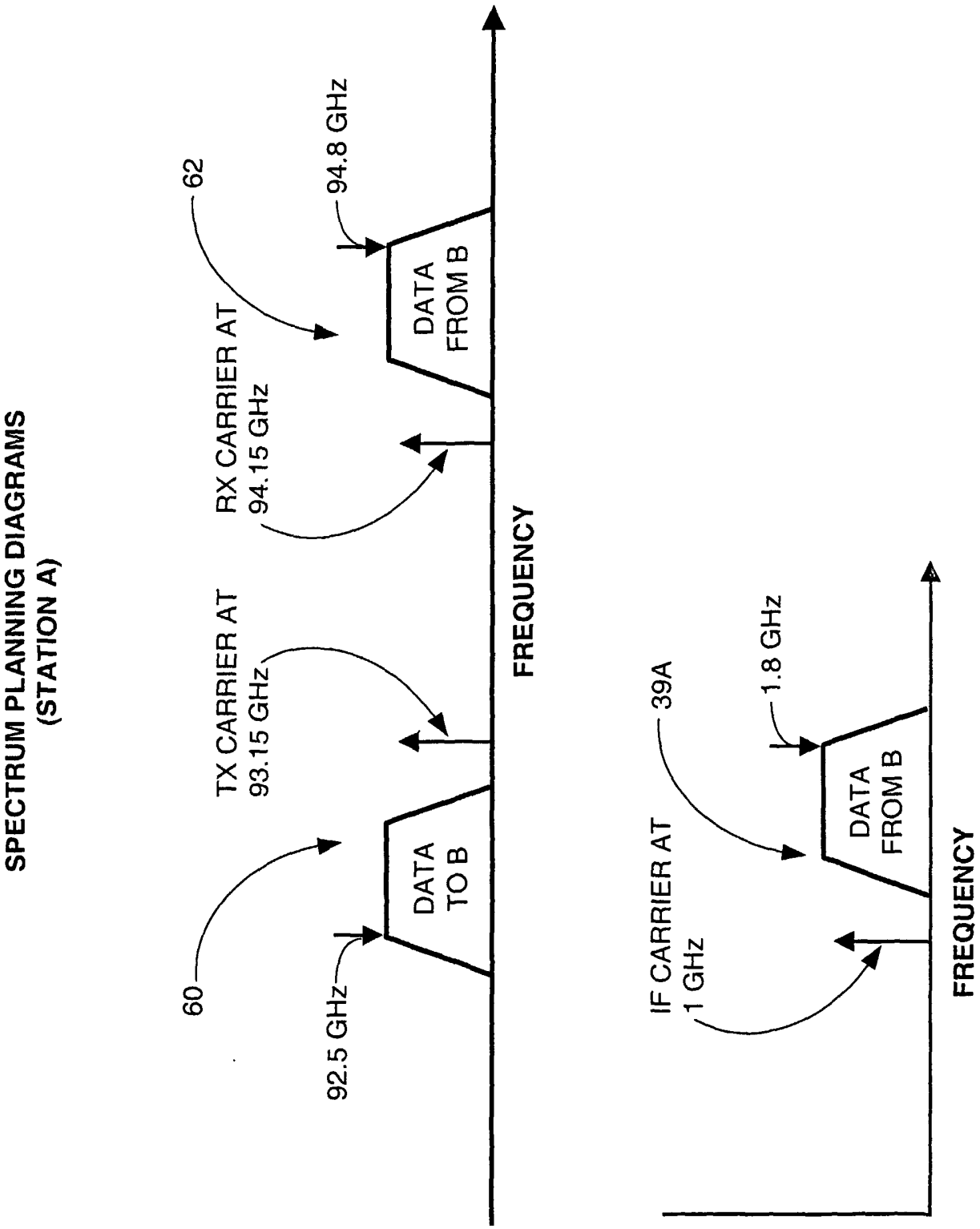
SPECTRUM PLANNING DIAGRAMS
(STATION A)
60
92.5 GHz
DATA
TO B
TX CARRIER AT
93.15 GHz
62
RX CARRIER AT
94.15 GHz
94.8 GHz
DATA
FROM B
FREQUENCY
39A
IF CARRIER AT
1 GHz
1.8 GHz
DATA
FROM B
FREQUENCY

FIG. 13A

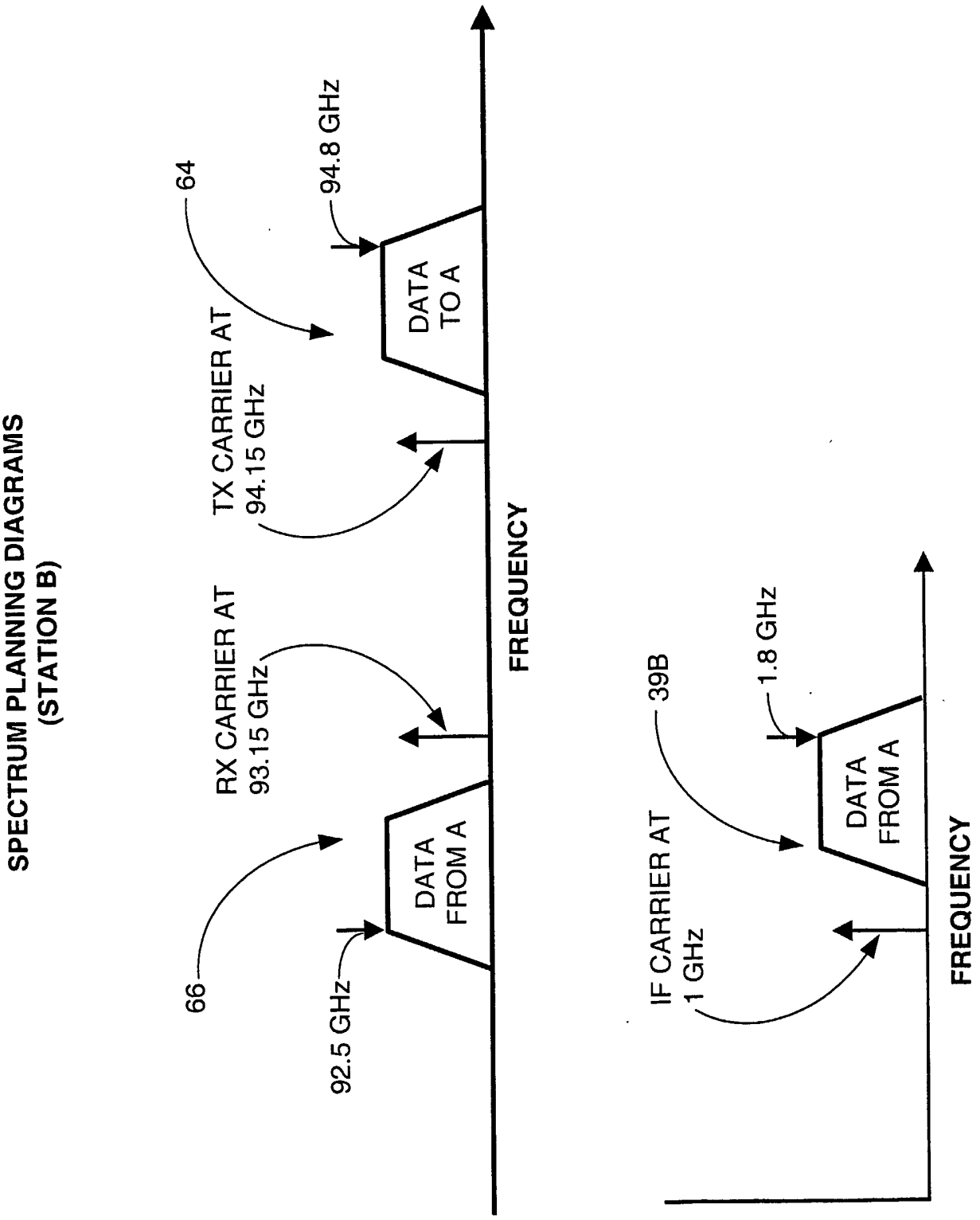
SPECTRUM PLANNING DIAGRAMS
(STATION B)
64
94.8 GHz
DATA
TO A
TX CARRIER AT
94.15 GHz
RX CARRIER AT
93.15 GHz
66
92.5 GHz
DATA
FROM A
FREQUENCY
39B
1.8 GHz
DATA
FROM A
IF CARRIER AT
1 GHz
FREQUENCY

FIG. 13B

INTERNATIONAL SEARCH REPORT

International application No.
PCT/US02/29098

A. CLASSIFICATION OF SUBJECT MATTER

IPC(7) : H04B 1/38; H04Q 7/28
US CL : 455/561, 560, 426; 370/340, 338, 327

According to International Patent Classification (IPC) or to both national classification and IPC

B. FIELDS SEARCHED

Minimum documentation searched (classification system followed by classification symbols)
U.S. : 455/561, 560, 426, 10, 8, 9, 7, 25, 67.6, 67.1, 562, 505, 504, 445, 422, 403; 370/340, 338, 327, 328, 315, 465, 468, 310

Documentation searched other than minimum documentation to the extent that such documents are included in the fields searched

Electronic data base consulted during the international search (name of data base and, where practicable, search terms used)
Please See Continuation Sheet

C. DOCUMENTS CONSIDERED TO BE RELEVANT

Category *	Citation of document, with indication, where appropriate, of the relevant passages	Relevant to claim No.
A	US 6,175,737 B1 (KAO) 16 January 2001 (16.01.2001) see abtract, figures 1 , 2, 5, 6, and 9-15, and column 4 line 45 - column 5 line 15	1-16
A	US 5,787,355 A (BANNISTER et al.) 28 July 1998 (28.07.1998), see entire document	1-16

☐ Further documents are listed in the continuation of Box C. ☐ See patent family annex.

* Special categories of cited documents:

"A" document defining the general state of the art which is not considered to be of particular relevance

"E" earlier application or patent published on or after the international filing date

"L" document which may throw doubts on priority claim(s) or which is cited to establish the publication date of another citation or other special reason (as specified)

"O" document referring to an oral disclosure, use, exhibition or other means

"P" document published prior to the international filing date but later than the priority date claimed

"T" later document published after the international filing date or priority date and not in conflict with the application but cited to understand the principle or theory underlying the invention

"X" document of particular relevance; the claimed invention cannot be considered novel or cannot be considered to involve an inventive step when the document is taken alone

"Y" document of particular relevance; the claimed invention cannot be considered to involve an inventive step when the document is combined with one or more other such documents, such combination being obvious to a person skilled in the art

"&" document member of the same patent family

Date of the actual completion of the international search	Date of mailing of the international search report
21 November 2002 (21.11.2002)	10 JAN 2003
Name and mailing address of the ISA/US Commissioner of Patents and Trademarks Box PCT Washington, D.C. 20231 Facsimile No. (703)305-3230	Authorized officer RAFAEL PEREZ-GUTIERREZ Telephone No. 703-308-8996

Form PCT/ISA/210 (second sheet) (July 1998)

INTERNATIONAL SEARCH REPORT

International application No.

PCT/US02/29098

Continuation of B. FIELDS SEARCHED Item 3:
WIPO Database (http://pctgazette.wipo.int/)
EPO Database (http://ep.espacenet.com/)
IEEE Xplore Database (http://ieeexplore.ieee.org/Xplore/DynWel.jsp)
EAST Databases (USPAT, US-PGPUB, IBM_TDB, DERWENT, JPO, EPO)

search terms: base station, transceiver, cellular, wireless, trunk line, millimeter wave