E. T. GOLDTHORPE.

ORE ROASTING FURNACE.

APPLICATION FILED JULY 17, 1916.

1,295,729.

Patented Feb. 25, 1919.

3 SHEETS—SHEET 1.

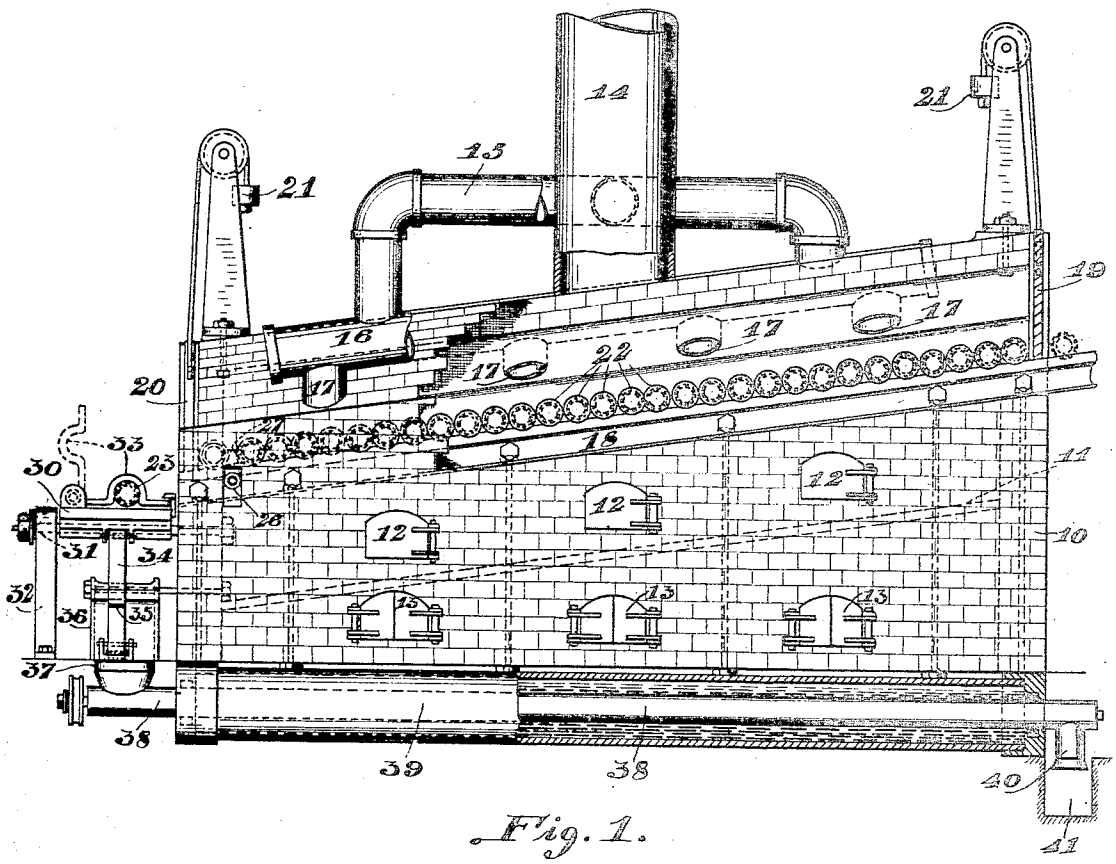

Fig. 1.

Witnesses:

J. M. Haines.

B. G. Richards.

Inventor,

Edwin T. Goldthorpe.

by Joshua R. H. Howe

his Attorney.

E. T. GOLDTHORPE.

ORE ROASTING FURNACE.

APPLICATION FILED JULY 17, 1916.

1,295,729.

Patented Feb. 25, 1919.

3 SHEETS—SHEET 2.

Fig. 2.

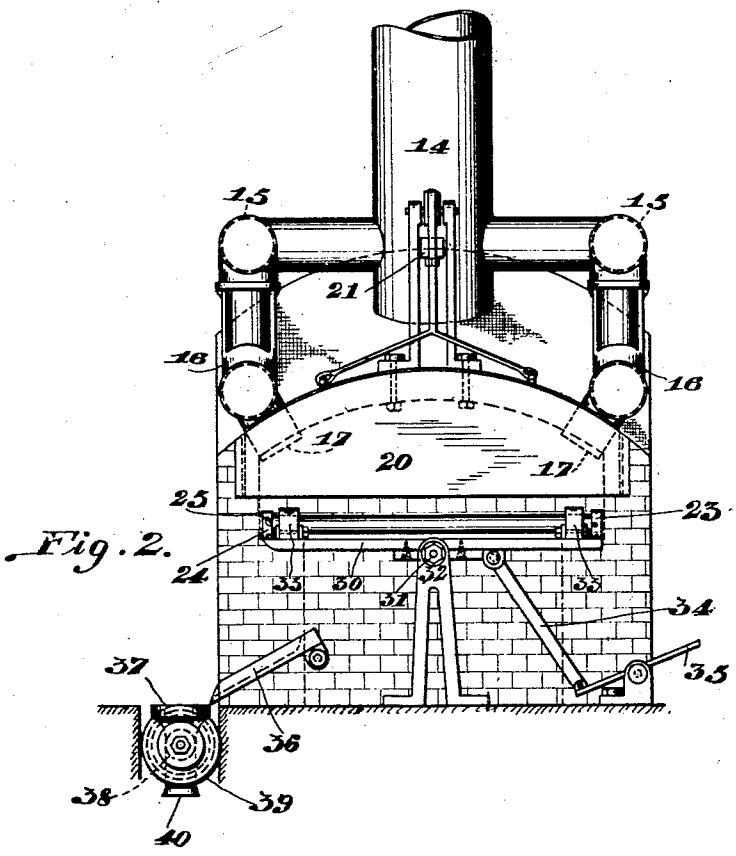

Fig. 3.

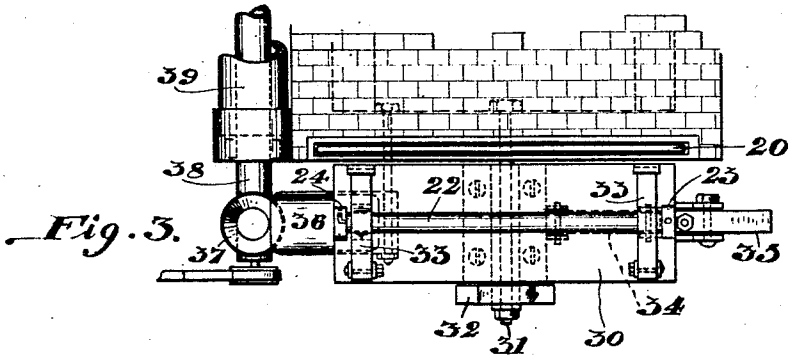

Witnesses:

J. M. Haines.

B. G. Richards

Inventor,

Edwin T. Goldthorpe.

by Joshua R. H. Lowe

his Attorney.

E. T. GOLDTHORPE.

ORE ROASTING FURNACE.

APPLICATION FILED JULY 17, 1916.

1,295,729.

Patented Feb. 25, 1919.

3 SHEETS—SHEET 3.

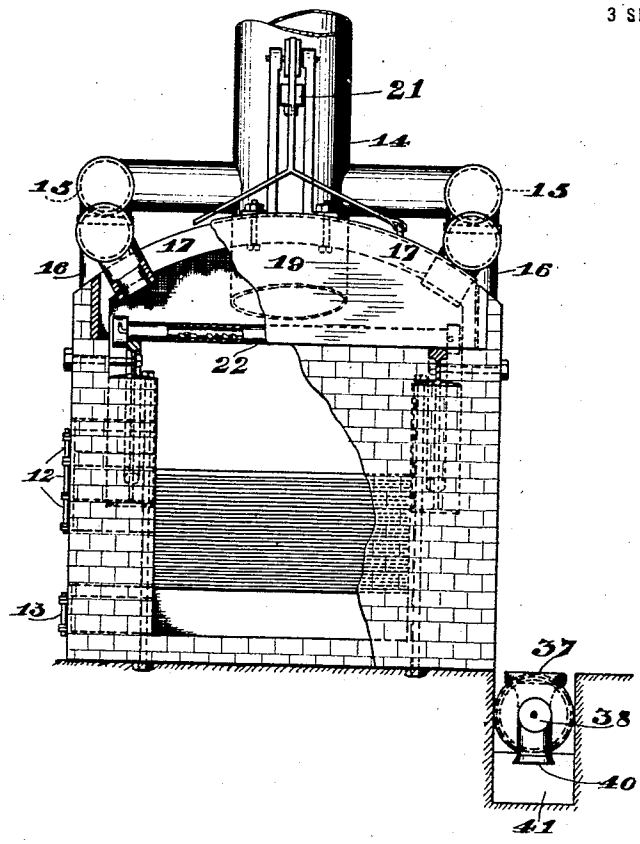

Fig. 4.

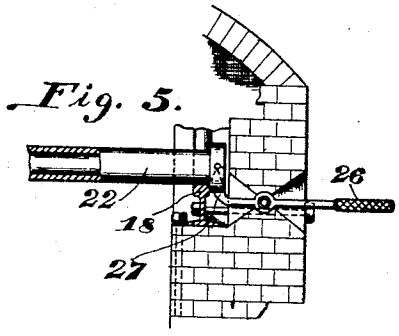

Fig. 5.

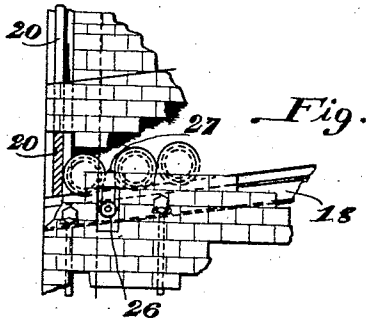

Fig. 6.

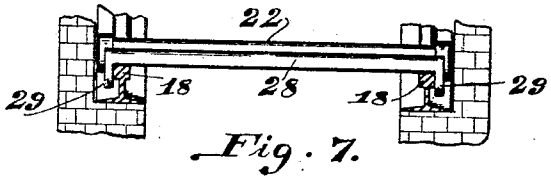

Fig. 7.

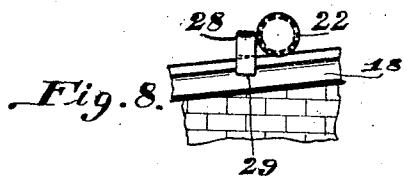

Fig. 8.

Witnesses:

J. M. Haines.

B. G. Richards

Inventor,

Edwin T. Goldthorpe.

by Joshua R. H. Potts

his Attorney.

UNITED STATES PATENT OFFICE.

EDWIN T. GOLDTHORPE, OF CHICAGO, ILLINOIS, ASSIGNOR, BY DIRECT AND MESNE ASSIGNMENTS, OF THREE-EIGHTHS TO FRED VON NESSEN AND THREE-EIGHTHS TO WILLIAM H. DICKS, BOTH OF CHICAGO, ILLINOIS.

ORE-ROASTING FURNACE.

1,295,729. Specification of Letters Patent. Patented Feb. 25, 1919.

Application filed July 17, 1916. Serial No. 109,795.

To all whom it may concern:

Be it known that I, EDWIN T. GOLDTHORPE, a citizen of the United States, and a resident of the city of Chicago, county of Cook, and State of Illinois, have invented certain new and useful Improvements in Ore-Roasting Furnaces, of which the following is a specification.

My invention relates to improvements in ore roasting furnaces, and has for its object the provision of an improved furnace of this character in which ore may be roasted conveniently and expeditiously.

A further object is the provision of such a furnace in which the ore may be roasted while being agitated.

Other objects will appear hereinafter.

With these objects in view the invention consists in the combinations and arrangements of parts hereinafter described and claimed.

The invention will be best understood by reference to the accompanying drawings forming a part of this specification, and in which,

Figure 1 is a front view of a furnace shown partially in section with parts broken away for the sake of clearness,

Fig. 2, a view of the discharge end of the furnace,

Fig. 3, a top plan view corresponding with Fig. 2,

Fig. 4, an end view of the feed end of the furnace with portions broken away and others in section,

Fig. 5, a detail view illustrating a stop employed in the construction,

Fig. 6, a front view corresponding with Fig. 5,

Fig. 7, a detail view illustrating a temporary stop employed in the construction, and

Fig. 8, a side view corresponding with Fig. 7.

The preferred form of construction, as illustrated in the drawings, comprises a furnace casing 10 having an inclined grate 11 therein. A plurality of fire doors 12 are provided in the front of the furnace giving access to different portions of the grate 11 and corresponding ash doors 13 are provided thereunder, as indicated in Fig. 1. A draft flue 14 is positioned centrally over the furnace and is connected by means of pipes 15 with branch flues 16 extending along each side of the top of the furnace. Branches 16 are connected by means of a plurality of branches 17 with the upper portion of the interior of the furnace, above the grate 11, and serve to produce a draft through said grate, the arrangement distributing said draft uniformly through said grate.

An inclined track 18 is arranged in the furnace over the grate 11 and a vertically sliding entry door 19 is positioned at the upper end of said track. A vertically sliding discharge door 20 is positioned at the lower end of said track and both of said doors are balanced by counter-weights 21, as indicated. A plurality of ore containers or retorts 22, in the form of pipes, are arranged on track 18 to roll thereon, under the influence of gravity, as will be readily understood. Each of these containers or retorts is provided at one end with a permanent sealing cap 23 and at its other end with a removable sealing cap 24 and having a bayonet slot connection 25 with said container. A removable swinging stop 26 is pivotally mounted in the front wall of the furnace 10 and has an upwardly turned nose 27 at its inner end arranged to be inserted between the last and the next to the last container or retort 22 resting on track 18, the arrangement being such that when the track 18 is filled with retorts, the lowermost retort rests against the door 20 and the stop 26 is inserted between said lowermost retort and the next retort so that when door 20 is opened, the lowermost retort may roll therethrough but the remainder of the retorts will be prevented from moving. After the door has been closed, the stop is manipulated to release the retorts on track 18 and permit said retorts to roll slightly on said track until the lowermost retort again contacts with the door 20. Then a fresh retort is introduced at the upper end of the track. By this means the operation of the furnace will be rendered continuous and the ore in the containers constantly agitated during the roasting thereof.

For convenience in "loading" or starting the furnace, a temporary stop is provided consisting of a bar 28 having downwardly turned ends 29, said bar being adapted to be positioned on the track 18 and to prevent

downward rolling of the retorts thereon. In use a few of the retorts will be inserted through the door 19 and held from rolling by the stop 28. After a suitable interval, the stop 28 will be moved sufficiently to permit of the insertion of more retorts and this process continued until the track 18 is filled with retorts, as indicated, whereupon the stop 28 is removed. The movements of stop 28 may be readily effected by the use of a long rod or "poker" having a crooked end.

A tiltable support 30 is arranged at the discharge end of the furnace and is pivoted at 31 to a standard 32. Clamps 33 are provided on said support in position to secure a retort or container passing thereon from the tracks 18 upon elevation of the door 20. The support 30 is connected, by means of a link 34, with a foot lever 35 by means of which the support may be readily tilted. In operation, after a container or retort has been discharged from the furnace onto the support 30 it is clamped thereon by means of the clamps 33. Then the removable cap 25 is removed and the support tilted by means of foot lever 35 to discharge the contents of the retort.

A chute 36 is arranged to receive the discharge from a filled retort and direct the same into the spout 37 leading into a screw conveyer 38 arranged at the rear of the furnace. Conveyer 38 passes through a chamber or casing 39 containing water for cooling purposes and is provided with a discharge spout 40 discharging into a discharge well 41. A suitable elevator or conveyer (not shown) may be provided for removing the roasted ore from the well 41, or said ore may be removed by hand or other suitable means.

The construction disclosed is especially adapted for the roasting of yellow ocher or oxid of iron for use as a body for black paint. The constant agitation of the ore while being roasted tends to uniformity of heating and also prevents caking of the ore and facilitates subsequent grinding or pulverizing of the same. The yellow ocher thus treated will assume a fast black color and is ground in the usual manner with linseed oil and turpentine to form a black paint. To form such paint, preferably fifty per cent. of the ground material is mixed with forty-eight per cent. linseed oil and two per cent. of turpentine. The paint thus produced is adapted for use as a paint for all purposes but is especially adapted for use in painting iron inasmuch as the same will expand and contract therewith.

While I have illustrated and described the preferred form of construction for carrying my invention into effect, this is capable of variation and modification without departing from the spirit of the invention. I, therefore, do not wish to be limited to the precise details of construction set forth, but desire to avail myself of such variations and modifications as come within the scope of the appended claims.

Having described my invention what I claim as new and desire to secure by Letters Patent is:

1. An ore roasting furnace comprising heating means; an inclined track in said heating means; cylindrical ore containers rolling on said track; and removable means for preventing rolling of said containers, substantially as described.

2. An ore roasting furnace comprising heating means; an inclined track in said heating means; cylindrical closed ore containers rolling on said track; and removable means for preventing rolling of said containers, substantially as described.

3. An ore roasting furnace comprising heating means; an inclined track in said heating means; cylindrical ore containers rolling on said track; an entry door at the upper end of said track; a discharge door at the lower end of said track; and a removable stop arranged to intercept the next to the lowermost of said containers, substantially as described.

4. An ore roasting furnace comprising heating means; an inclined track in said heating means; cylindrical closed ore containers rolling on said track; an entry door at the upper end of said track; a discharge door at the lower end of said track; a removable stop arranged to intercept the next to the lowermost of said containers, substantially as described.

5. An ore roasting furnace comprising a grate; draft flues positioned over different portions of said grate; an inclined track over said grate; cylindrical ore containers rolling on said track; and removable means for preventing rolling of said containers, substantially as described.

6. An ore roasting furnace comprising heating means; an inclined track in said heating means; cylindrical ore containers rolling on said track; an entry door at the upper end of said track; a discharge door at the lower end of said track; a removable stop arranged to intercept the next to the lowermost of said containers; a tiltable support arranged to receive containers passing through said discharge door; and clamping means on said support arranged to secure a container thereon, substantially as described.

7. An ore roasting furnace comprising heating means; an inclined track in said heating means; cylindrical ore containers rolling on said track; an entry door at the upper end of said track; a discharge door at the lower end of said track; a removable stop arranged to intercept the next to the lowermost of said containers; a tiltable sup-

BEST AVAILABLE COPY

port arranged to receive conta
through said discharge doo
means on said support arranged
container thereon; a screw co
ranged to receive discharge from a co
on said support; and means for cooling
conveyer, substantially as described.

8. An ore roasting furnace comprising heating means; an inclined track in said heating means; cylindrical ore containers rolling on said track; an entry door at the upper end of said track; a discharge door at the lower end of said track; a removable stop arranged to intercept the next to the lowermost of said containers; a tiltable support arranged to receive containers passing said discharge door; clamping
said support arranged to secure a
thereon; a screw conveyer ar-
o receive discharge from a container
support; means for cooling said
er; and a discharge well adapted to
e the discharge from said conveyer,
antially as described.

In testimony whereof I have signed my name to this specification in the presence of two subscribing witnesses.

EDWIN T. GOLDTHORPE.

Witnesses:
JOSHUA R. H. POTTS,
HELEN F. LILLIS.