No. 689,445. Patented Dec. 24, 1901.

C. WIRT.

RHEOSTAT.

(Application filed Oct. 13, 1900.)

(No Model.) 2 Sheets—Sheet 1.

Fig. 1.

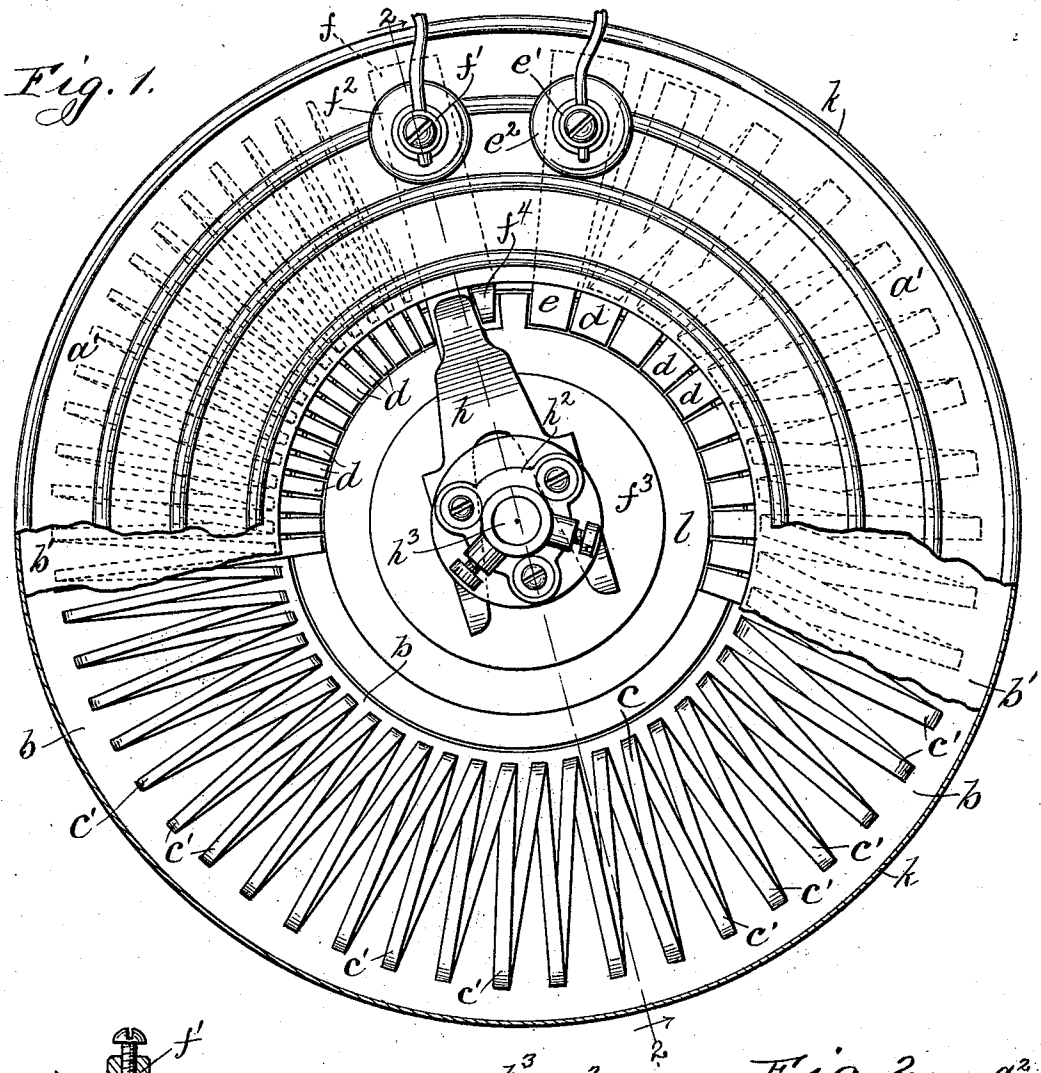

Fig. 2.

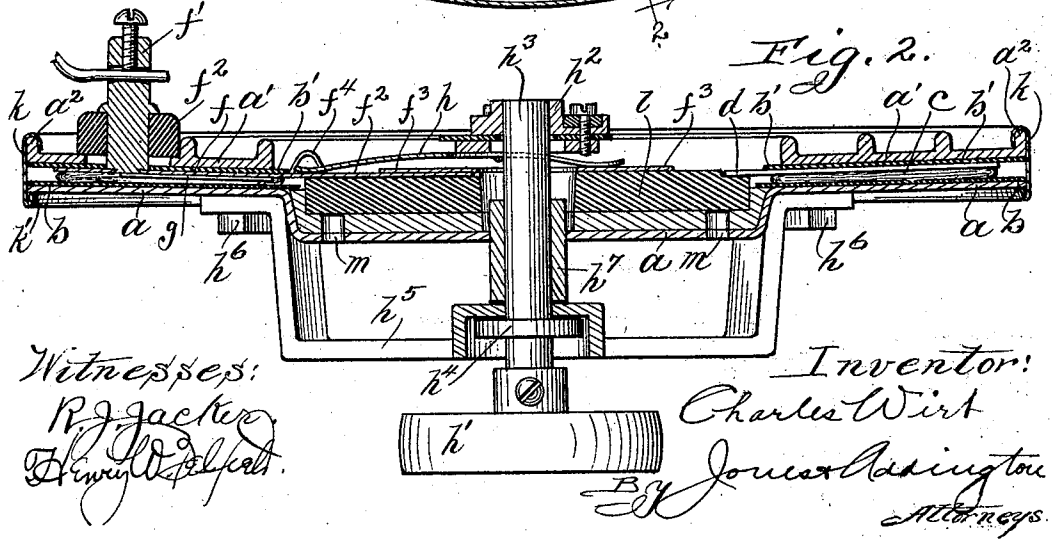

Witnesses:
R. J. Jackson
Henry Wolfert.

Inventor:
Charles Wirt
By Jones & Addington
Attorneys.

THE NORRIS PETERS CO., PHOTO-LITHO., WASHINGTON, D. C.

No. 689,445. Patented Dec. 24, 1901.

C. WIRT.

RHEOSTAT.

(Application filed Oct. 13, 1900.)

(No Model.) 2 Sheets—Sheet 2.

Fig. 3.

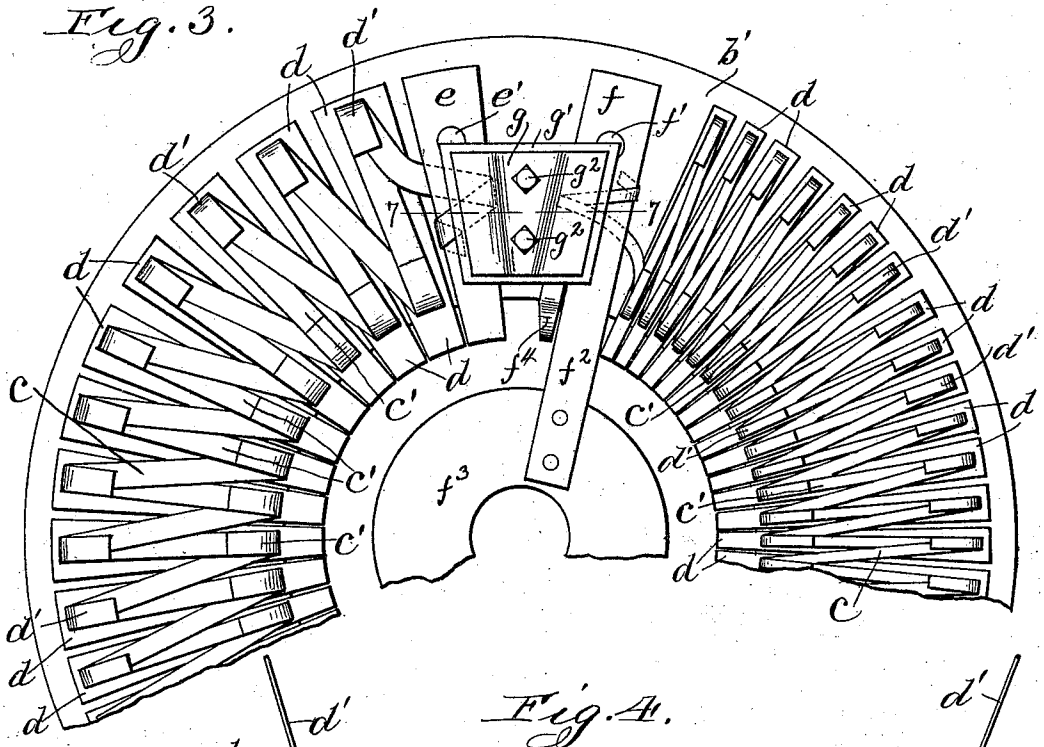

Fig. 4.

Fig. 5a.

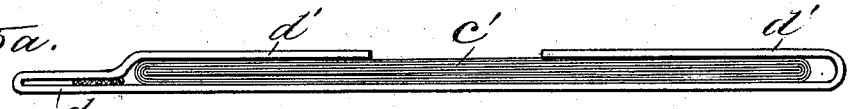

Fig. 5.



Fig. 6.

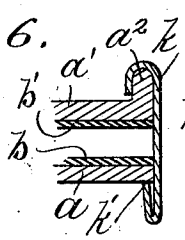

Fig. 7.

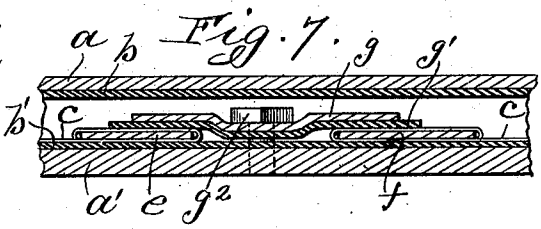

Witnesses:
R. J. Jacker
Henry W. Delfeld

Inventor:
Charles Wirt
By Jones & Addington
Attorneys.

THE NORRIS PETERS CO., PHOTO-LITHO., WASHINGTON, D. C.

UNITED STATES PATENT OFFICE.

CHARLES WIRT, OF PHILADELPHIA, PENNSYLVANIA.

RHEOSTAT.

SPECIFICATION forming part of Letters Patent No. 689,445, dated December 24, 1901.

Application filed October 13, 1900. Serial No. 32,948. (No model.)

To all whom it may concern:

Be it known that I, CHARLES WIRT, a citizen of the United States, residing in Philadelphia, in the county of Philadelphia and State of Pennsylvania, have invented a certain new and useful Improvement in Rheostats, of which the following is a full, clear, concise, and exact description, reference being had to the accompanying drawings, forming a part of this specification.

My invention relates to a rheostat, my object being to provide an improvement upon the general form of rheostat illustrated in Letters Patent No. 633,172, granted to me September 19, 1899. In said patent above referred to I have shown a rheostat in which the resistance-conductor is formed from a ribbon of German silver or similar material formed into a plurality of resistance sections or coils, which in practice are adapted to occupy radial positions and to rest in contact with contact-bars with which the contact element of the rhoestat is adapted to engage, these several parts being clamped between suitable casing-plates. In said application I have shown the resistance-ribbon formed of uniform width throughout and have also shown the contact-bars with which the ribbon makes electrical contact also formed of uniform width.

In accordance with the present invention I form the resistance-ribbon of continuously-decreasing width from one end to the other—that is, tapered—so that by making the resistance-sections of the same number of turns or convolutions throughout a resistance-conductor is provided in which the resistance-sections are of continuously and uniformly increasing resistance from one end of the rheostat to the other. I preferably connect this resistance-conductor in circuit, so that when but a small portion of the rheostat-resistance is included in circuit the resistance-sections of large cross-section will be in service, while the movement of the rheostat-arm to include more resistance in circuit serves to cut into the circuit the resistance-sections of decreased cross-section. By this arrangement the cross-section of the conductor in circuit varies in direct proportion to the current flowing—that is, when the rheostat-resistance is small and a relatively large current is flowing the cross-section of the resistance-sections in circuit is large, while when a larger resistance is included in circuit the sections of less cross-section are traversed by current; but due to the increased resistance in circuit, the current flowing is relatively smaller. The resistance-ribbon of continuously-decreasing width thus permits the construction of a rheostat which is more efficient and which more readily accommodates itself to the varying conditions of use than would be the case were the ribbon of uniform cross-section. Moreover, this arrangement permits a more uniform distribution of heat during the operation of the rheostat. Since the widths of the contact-bars with which the resistance-sections engage vary from one end of the rheostat to the other, the contact-surface between the resistance-section and the contact-bar varies in accordance with the requirement for carrying capacity. Thus for wide resistance-sections which are called upon to carry large currents the contact-surface between the ribbon and the contact-bar is relatively large, while the surface-contact between narrower resistance-sections and the corresponding contact-bars is smaller to accommodate the lesser maximum current which flows through these sections of decreased width. Again, the contact-bars of varying widths facilitate the conduction of the current from the contact-bars to the movable contact-arm of the rheostat by varying the surface contact between the contact-bars and the contact-arm in accordance with the strength of the current flowing—that is, when small resistance is included in circuit and a large current is flowing the contact-arm rests upon one of the wide contact-bars, while when a greater resistance is included in circuit the contact-arm rests upon a narrower bar. By thus forming the resistance-ribbon with continuously-decreasing width from one end to the other and by the employment of contact-bars of varying widths, as above described, I am able to produce a rheostat which possesses many points of advantage over rheostats of the prior art.

My invention also contemplates various details of mechanical construction, which will be

hereinafter more particularly described and claimed.

I have illustrated my invention in the accompanying drawings, in which—

Figure 1 is a plan view of the rheostat of my invention, showing a portion of the top plate and insulation broken away. Fig. 2 is a sectional view on line 2 2, Fig. 1. Fig. 3 is a partial bottom view of the rheostat, showing one of the casing-plates removed. Fig. 4 is a view illustrating the manner of mounting the clamping-strip upon the contact-bar. Fig. 5 is a view illustrating the resistance-section in position upon the contact-bar. Fig. 5^a is a view of a modification of the contact-bar. Fig. 6 is a detail view showing the manner of securing the casing-plates together at the edges. Fig. 7 is a sectional view on line 7 7, Fig. 3.

Like letters refer to like parts in the several figures.

Upon the inner face of the casing-plate a an annular ring b, of asbestos or similar insulating material, is placed, and a similar annular ring b', of insulating material, is mounted upon the inner face of the opposite casing-plate a'. The resistance-conductor is interposed between the two layers of insulating material and is clamped between the casing-plates a a'. This resistance-conductor consists of a thin ribbon c, of resistance material, such as German silver, and the ribbon is wound to form a plurality of resistance-sections c' c', adapted in the complete rheostat to occupy positions side by side, as illustrated. These several resistance-sections are formed from a continuous and integral ribbon, and this ribbon is of continuously-decreasing width from one end to the other, the ribbon being thus formed with a taper. The result of this construction is that the cross-section and consequently the carrying capacity of the conductor vary from one end to the other. The several resistance-sections c' c' are adapted to rest upon and to make electrical contact with contact-bars d d, which in the specific embodiment illustrated occupy radial positions and which are of successively-decreasing width from one end of the rheostat to the other—that is, each contact-bar is of less width than its neighbor or the bars of a group are of less width than the bars of an adjacent group. The inner ends of these contact-bars project beyond the edge of the annular casing-plate a' to form the rheostat-terminals, with which the movable element or contact-arm of the rheostat is adapted to engage.

While I have illustrated a rheostat of the circular form, it will be understood that my invention is equally applicable to a rheostat in which the contact-terminals are not arranged in a curve.

I have illustrated in Figs. 4 and 5 the construction which I preferably employ for mounting the resistance-sections upon the contact-bars. Upon the face of contact-bar d a strip d' of tin or other material is mounted, the strip d', except at the ends, which are free, being sweated or otherwise secured to the face of the contact-bar d. The resistance-section c' having been placed upon the face of strip d, the free ends of said strip are folded over, as seen in Fig. 5, to lie upon the top of the resistance-section, whereby the resistance-section is clamped in position by the clamping-strip d'. When the several contact-bars and the resistance-sections mounted thereon are clamped in position between the casing-plates of the rheostat, the clamping-strip d' is pressed into firm contact with the contiguous faces of the ribbon comprising the resistance-conductor.

I have shown in Fig. 5^a a modification in which the flexible or free portions d' d' are formed integral with the contact-bar.

As explained in my prior patent, above referred to, I preferably coat one face of the ribbon with an insulating material, so that when the same is formed into coils to constitute the resistance-sections the several turns or convolutions of the coils are relatively insulated.

The several contact-plates d d and the resistance-sections mounted thereon are adapted to occupy positions side by side, as illustrated, and to be clamped between the casing-plates, and the metallic casing-plates are insulated from the electrical conductors through the agency of the layers b b' of insulating material. One end of the conductor c is wrapped about terminal plate e, to which is electrically connected the binding-post e', the binding-post e' carrying a shank, which is electrically connected with said plate e and being insulated from the casing-plate a' by means of a block of insulation e^2. The opposite end of the resistance-ribbon c is wrapped about the terminal plate f, which is electrically connected with the binding-post f', said binding-post being mounted upon the insulating-block f^2. In order to firmly secure the terminal plates e and f in position and to electrically connect the ends of the ribbon c therewith, I provide a bridge-plate g, which is separated from the terminal plates by means of a sheet g' of insulating material, as asbestos, this bridge-plate being clamped to the casing-plate by means of screws g^2 g^2. The end of terminal plate e constitutes one of the terminals with which the contact-arm of the rheostat is adapted to engage, while the terminal plate f is provided with an inwardly-projecting arm f^2, to the end of which is secured a ring f^3. The contact-spring h, adapted to be moved by the handle h', is arranged to engage at one end the projecting ends or terminals of the contact-bars, while the other end is adapted to make contact with the ring f^3, connected with the terminal plate f. Current entering by binding-post f', for instance, may pass to ring f^3, thence by contact-spring h to one of the terminals, and thence through the resistance-

sections in circuit to terminal plate e and to binding-post e'. The spring-arm h is mounted upon a hub or casting h^2, which in turn is mounted upon a rotating shaft h^3, carrying at the end the handle h'. A collar h^4, carried upon the shaft h^3, engages a bracket h^5 to limit the lengthwise movement of the shaft h^3. The bracket h^5 is secured by screws h^6 h^6 to the clamping-plate a. A suitable bearing-sleeve h^7 is provided for the shaft h^3, this bearing-sleeve being supported upon the bracket h^5 and the casing-plate a. A tongue f^4 is formed from a portion of the terminal plate f to act as a stop or abutment to limit the movement of the contact-arm h.

In order to more effectively secure the several parts of the rheostat between the casing-plates a a', I form one or both, preferably both, of the casing-plates with a slight dish thereto—that is, slightly convex—so that when brought together the inner edges of the annular plates will rest closer together than the outer edges. By then forcing the outer edges toward each other the plates may be slightly sprung to thereby firmly clamp the contact-bars and resistance-sections in position. In assembling the rheostat I employ clamping-plates adapted to force the outer edges of the casing-plates toward each other and then secure the outer edges of the casing-plates together by means of a binding-strip k of sheet metal, one edge of this strip of metal being folded upon itself to form a shoulder k', adapted to rest against the outer face of plate a, while the other edge of said strip k is adapted to be folded over a ridge a^2, bounding the plate a'. The casing-plates are in this manner firmly secured together. This manner of securing the casing-plates together causes a firm grip upon the contact-bars d, so as to prevent the same from being thrown out of their radial positions by the engagement of the contact-arm h therewith. The movement of this contact-arm h is lateral with respect to the contact-bars, and if the same are not firmly clamped in position there will be a tendency to shift these contact-bars laterally, thereby bringing the contact-bars into contact to short-circuit the resistance-sections and otherwise render the operation of the rheostat unsatisfactory.

In order to insure the resting of the ends of the contact-bars in alinement and on a common level, I provide an insulating center plate l, of porcelain or similar material. A series of holes m m are provided through the back casing-plate a, whereby suitable instruments may be inserted to temporarily support the center plate l during the assembling of the rheostat and to force the face thereof upward under the ends of the contact-bars d d. Previous to this placing of the center plate in position the ends of the contact-bars d are bent to give to the same a tendency to extend downward rather than upward, and then as the center plate is forced upward against the ends of the contact-bars the ends thereof are all brought to a common level. Plaster-of-paris is then flowed into the spaces between the center plate l and the back plate a and permitted to harden, whereby the center plate is securely fixed in position. The ring f^3, connected with the terminal plate f, is adapted to rest upon the top of the center plate l, and to accommodate the extending arm of the terminal plate f a channel is formed in the upper face of the center plate l.

Having described my invention, what I claim as new, and desire to secure by Letters Patent, is—

1. The combination with a resistance-ribbon of decreased width from one end to the other and formed into a plurality of resistance coils or sections arranged side by side, of contact-terminals electrically connected with said several sections and casings or plates between which said several coil-sections are mounted and clamped, substantially as described.

2. The combination with a contact-bar, of a strip of flexible metal secured thereto and having the ends free and a coil formed from a ribbon of resistance material resting upon said metallic strip, the free ends of said strip being folded over said coil, substantially as described.

3. The combination with a plurality of contact-bars lying side by side, the ends of said bars constituting the contact-terminals of a rheostat, of a flexible strip of metal secured to the face of each of said bars, the ends of said strips being feee, and a resistance-ribbon formed into a plurality of resistance-coils one adapted to rest upon each of said flexible strips, the free ends of said strips being folded over the respective coils, substantially as described.

4. The combination with a contact-bar and a coil formed from a ribbon of resistance material, of a pair of free metallic portions in electrical contact with said contact-bar and adapted to fold over the ends of said coil, substantially as described.

5. The combination with a plurality of contact-bars resting side by side, the ends thereof forming contact-terminals, of a plurality of flexible metallic strips secured one to each of said bars and having the ends free, a resistance-ribbon formed into a plurality of coils one adapted to rest upon each of said strips, the ends of said strips being folded over the respective coils, and a pair of casing-plates between which said contact-bars and the coils mounted thereon are adapted to be clamped, substantially as described.

6. The combination with the terminal plate, of the resistance-ribbon having the end wrapped around said terminal plate, and a clamping-plate adapted to compress said ribbon against said terminal plate to effect a firm electrical contact, substantially as described.

7. The combination with the terminal plates e, f, of the resistance-ribbon having

its opposite ends wound around the respective terminal plates, and the bridge-plate insulated from said terminal plates and adapted to compress the ends of said ribbon against said plate, substantially as described.

8. The combination with the contact-bars lying side by side and having the ends extended to form contact-terminals, of the center plate adapted to support said extended ends from beneath, substantially as described.

9. The combination with the contact-bars occupying radial positions and having the inner ends extended to form contact-terminals, of the center plate having the periphery adapted to engage and support the ends of said contact-bars, substantially as described.

10. The combination with the casing-plates and the resistance-coils and associated parts clamped between the same, of the binding-strip extending around the periphery of said casing-plates and serving to secure the same together, substantially as described.

11. The combination with the casing-plates and the resistance-coils and associated parts clamped between the same, of the binding-strip extending around the periphery of said casing-plates, and having the ends folded over to engage the edges of the casing-plates and clamp the same together, substantially as described.

12. The combination with the casing-plates and the resistance-coils and associated parts clamped between the same, one of said casing-plates having a peripheral ridge extending around the same, of the binding-strip having one edge folded over to engage the edge of one of said casing-plates and having the other edge folded over the peripheral ridge on the other casing-plate, substantially as described.

13. The combination with the annular casing-plates formed so that the outer edges normally rest at a greater distance apart than the inner edges, of the resistance-coils and associated parts adapted to rest between said plates and the binding-strip for securing the peripheries of said plates in an approached position, substantially as described.

14. The combination with a plurality of resistance-sections, and a series of contact-terminals connected respectively therewith, of a contact element adapted to sweep over said contact-terminals, said contact element and terminal being constructed so that the area of contact between the same diminishes step by step as the contact element is moved from one end of the series of terminals to the other, substantially as described.

15. The combination with a plurality of resistance-sections, of a series of contact-bars connected respectively with said resistance-sections and a contact element adapted to sweep over said contact-bars, said contact-bars being of decreasing width from one end of the series to the other, substantially as described.

16. The combination with a plurality of resistance-sections, of a series of contact-bars connected respectively therewith and arranged side by side, a contact element adapted to sweep over said contact-bars, the contact-bars being of decreasing width from one end of the series to the other and arranged so that as the contact element is moved to cut in resistance the same engages contact-bars of less width, substantially as described.

17. The combination with a series of contact-bars arranged side by side, the ends of said bars constituting the contact-terminals and being of decreasing width from one end of the series to the other, of a resistance-ribbon formed into a plurality of resistance-coils, one of said coils being mounted upon each of said contact-bars, and a contact element adapted to engage the contact-terminals, substantially as described.

18. The combination with the contact-bars lying side by side and having the ends extended to form contact-terminals, of an insulating-plate adapted to support said extended ends from beneath, substantially as described.

19. The combination with a series of contact-bars arranged side by side, the ends of said bars constituting the contact-terminals, and being of decreased width from one end of the series to the other, of a resistance-ribbon of decreased width from one end to the other formed into a plurality of resistance coils or sections, the coils of greater width being mounted upon contact-terminals of greater width and vice versa, and a contact element adapted to engage the contact-terminals, substantially as described.

In witness whereof I have hereunto subscribed my name in the presence of two witnesses.

CHARLES WIRT.

Witnesses:
CHAS. L. LOCKWOOD,
CHAS. M. LOCKWOOD.