Jan. 22, 1957 P. S. CROWL 2,778,354

STONE CUTTING MACHINE

Filed April 1, 1955 2 Sheets-Sheet 1

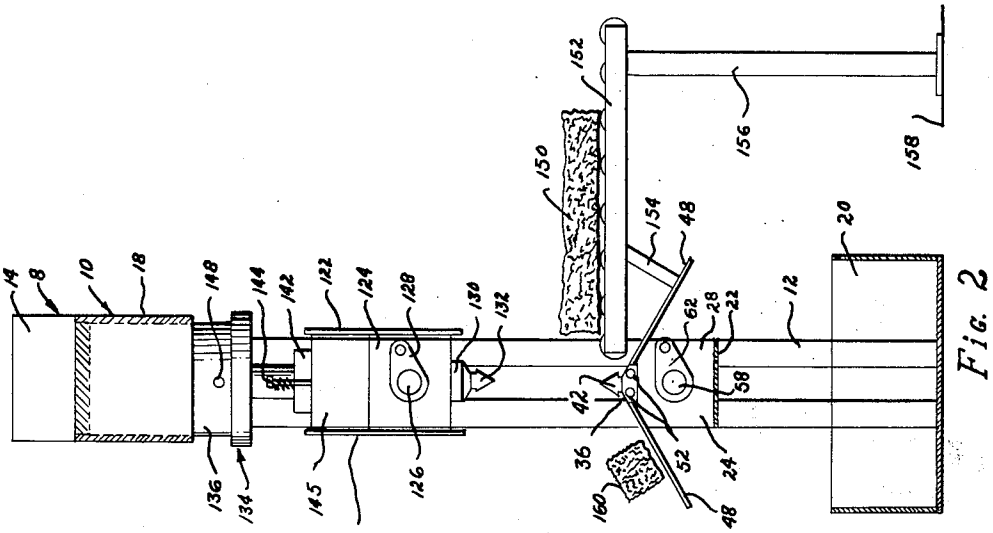

Fig. 2

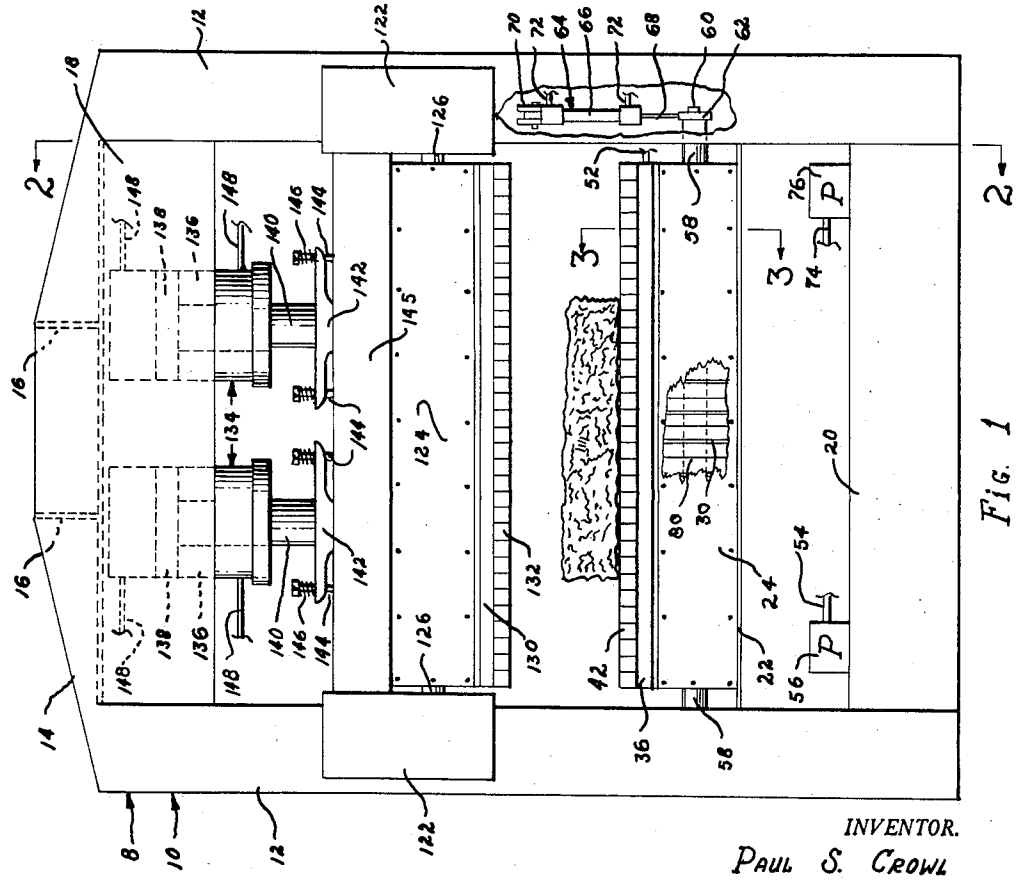

Fig. 1

INVENTOR.
PAUL S. CROWL
BY Jerry Dunlap
ATTORNEY

Jan. 22, 1957 P. S. CROWL 2,778,354

STONE CUTTING MACHINE

Filed April 1, 1955 2 Sheets-Sheet 2

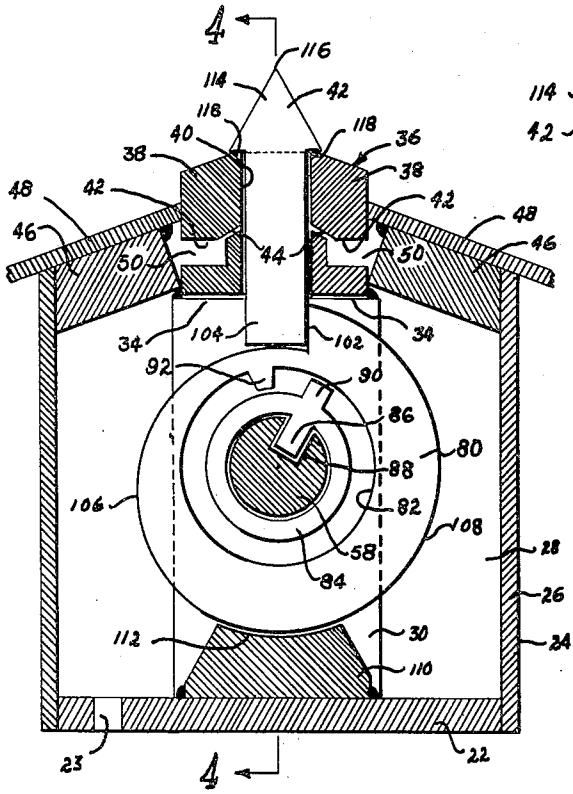

Fig. 3

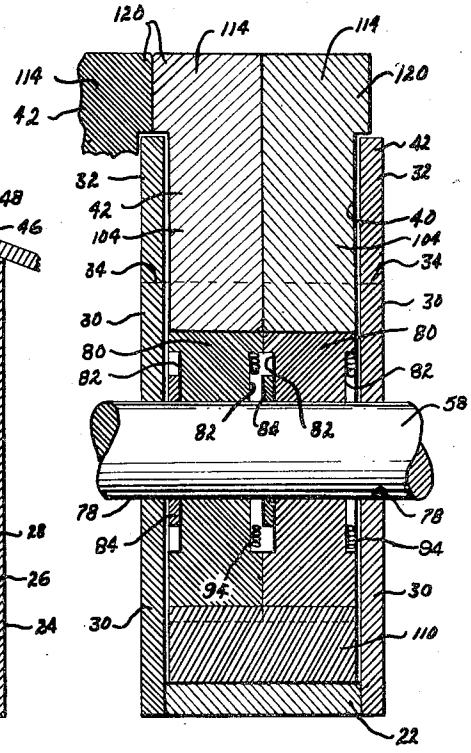

Fig. 4

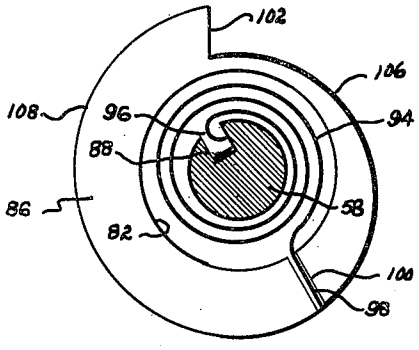

Fig. 5

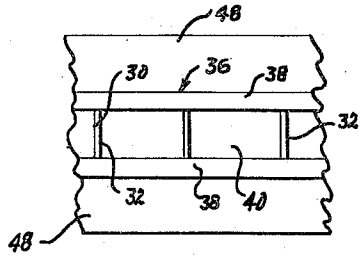

Fig. 6

INVENTOR.
PAUL S. CROWL
BY Jerry Dunlap
ATTORNEY

United States Patent Office 2,778,354 Patented Jan. 22, 1957

2,778,354

STONE CUTTING MACHINE

Paul S. Crowl, Oklahoma City, Okla.

Application April 1, 1955, Serial No. 498,491

6 Claims. (Cl. 125—23)

This invention relates to improvements in machines of the type used for cutting or breaking large slabs of building stone.

As it is well known in the art, building stone is usually transported in large slabs, and is then cut or broken to the desired size at or near the building site. The machines ordinarily used for cutting the stone utilize a stationary and a movable row of knives or chisels for engaging the opposite sides of the stone along the line the stone is to be cut. Inasmuch as the stones usually have uneven surfaces, each of the knives must be individually movable to conform to the surface of the stone. At the present time, the most popular machines use a complicated wedging arrangement for actuating the knives, and the wedges are either spring loaded or hydraulically actuated. In any event, the knife actuators are unduly complicated and the operation of the machines is impaired. Also, the knives and wedges usually are easily clogged by sand and small pieces of stone becoming wedged therebetween.

The present invention contemplates a novel stone cutting machine utilizing enclosed spring-loaded cams for operating each of the knives or chisels independently. The present means of actuating the knives is simple in construction and will increase the speed of stone cutting. The present invention also contemplates a novel system for lubricating the knives.

An important object of this invention is to facilitate and increase the speed of stone cutting.

Another object of this invention is to provide a compactly constructed stone cutting machine, whereby the stone cutting operation will be facilitated.

Another object of this invention is to provide a stone cutting machine utilizing a novel lubricating system.

A further object of this invention is to simplify the construction of stone cutting machines.

Another object of this invention is to provide a stone cutting machine, the knives of which will not easily become clogged by sand and stone cuttings.

A still further object of this invention is to provide a novel stone cutting machine having a long service life and which may be economically manufactured.

Other objects and advantages of the invention will be evident from the following detailed description, read in conjunction with the accompanying drawings, which illustrate my invention.

In the drawings:

Figure 1 is a rear elevational view of the machine.

Figure 2 is a sectional view as taken substantially along lines 2—2 of Figure 1.

Figure 3 is an enlarged sectional view as taken along lines 3—3 of Figure 1.

Figure 4 is another sectional view as taken along lines 4—4 of Figure 3.

Figure 5 is an elevational view of the opposite side of the cam shown in Figure 3.

Figure 6 is a partial top view of the lower knife head, with the knives removed.

Referring to the drawings in detail, and particularly Figures 1 and 2, reference character 8 generally designates my novel stone cutting machine having a frame generally designated at 10. The frame 10 comprises a pair of upstanding legs 12 of substantially channel-shaped cross-section connected at their upper ends by a cross member 14. The cross member 14 is suitably braced by plates 16 and has downwardly extending side plates 18 for purposes as will be hereinafter set forth. A sump or reservoir tank 20 is secured to the lower ends of the legs 12 to collect the lubricating oil as will be presently described.

A support plate 22 extends between and is secured to the legs 12 above the sump 20 for supporting a substantially horizontally extending housing 24. The support plate 22 is rigidly secured to the legs 12 in any suitable manner, such as by welding (not shown). The housing 24 (see Figure 3) has side plates 26 extending the length thereof and bolted (not shown) to the support plate 22, and end plates 28 secured to the opposite ends of the side plates 26. A plurality of spacer plates 30 (see also Figures 4 and 6) are rigidly secured on the support plate 22 in equally spaced relation along the length of the housing 24.

The upper ends 32 of the spacers 30 are reduced in width to form upwardly facing shoulders 34 and to project through a sectional head, generally designated at 36. Each half section 38 of the head 36 is in the form of an elongated bar and is secured on the shoulders 34 on the adjacent sides of the spacers 30 along the length of the housing 24. As shown in Figure 6, the inner sides of the head sections 38 are in contacting relation with the opposite sides of the spacer portions 32 to form a plurality of vertical slots or chambers 40 for receiving the knives 42 (Figures 3 and 4) as will be hereinafter set forth. In addition, each head section 38 (see Figure 3) has a longitudinal groove 42 formed in the outer side thereof throughout the length of the head 36, and small passageways 44 provide communication between each groove 42 and each chamber 40.

A substantially rectangular bar 46 is removably secured by bolts or the like (not shown) to the upper inner edge of each side plate 26 and is of sufficient length to contact the housing end plates 28 at its opposite ends. Each bar 46 extends inwardly into contact with the lower outer edge of the adjacent head section 38 and is preferably welded to the section 38 and spacer shoulders 34. In addition, each bar 46 is slanted transversely to support a baffle plate 48 on each side of the head 36 for deflecting cut stone from the housing 24 as will be more fully hereinafter set forth.

As will be observed in Figure 3, the inner edge of each baffle plate 48 abuts the outer side of the respective head section 38 to cooperate with the inner side of the respective bar 46 and groove 42 in forming a lubricating passageway 50 at each side of the head 36. Each passageway 50 (see Figures 1 and 2) communicates with a lubricant supply conduit 52 suitably secured in one end plate 28 (the right end of the housing 24 as viewed in Figure 1). The conduits 52 in turn communicate (not shown) with the discharge 54 of a pump 56 suitably secured on the sump 20. The pump 56 is preferably of the centrifugal type and is driven by a suitable motor (not shown) to provide a continuous supply of lubricant under pressure from the sump 20 through the conduits 54 and 52 to the passageways 50 for purposes as will be hereinafter set forth.

A shaft 58 (Figure 1) extends longitudinally through the central portion of the housing 24 and is journaled (not shown) in the end plates 28. One end 60 of the shaft 58 extends into the adjacent frame leg 12 and has a bell crank 62 secured thereon. The bell crank 62 is

turned by a hydraulic unit generally indicated at 64 and comprising a hydraulic cylinder 66 having a piston (not shown) reciprocally disposed therein, with a piston rod 68 extending from the piston through one end of the cylinder 66. The opposite end of the cylinder 66 is pivotally secured in the respective leg 12 by a bracket 70, and the outer end of the piston rod 68 is pivotally secured to the outer end of the bell crank 62. Hydraulic fluid is alternately supplied to the opposite ends of the cylinder 66 through conduits 72 to reciprocate the piston and piston rod 68 and turn the bell crank 62 and shaft 58. The conduits 72 communicate with the discharge 74 of another pump 76 through suitable conduits and valving (not shown), whereby the hydraulic unit 64 may be controlled by the operator when and as desired. The pump 76 is preferably of the positive displacement type and may be mounted in any desired location, such as on the sump 20 as shown. Also, of course, the pump 76 is driven by a suitable power unit (not shown).

As shown in Figures 3 and 4, the shaft 58 extends through aligned apertures 78 in the spacers 30 to support a pair of cams 80 between each pair of spacers. The cams 80 are loosely mounted on the shaft 58, and each cam has a counterbore 82 formed in each end face thereof concentrically around the shaft 58. A turning ring 84 is slidingly disposed in one of the counterbores 82 of each cam 80 and has an inwardly extending key 86 formed on the inner periphery thereof extending into a complementary key-way or groove 88 formed in the outer periphery of the shaft 58. Therefore, the turning rings 84 will turn with the shaft 58, whereas the cams 80 will "float" on the shaft 58. Each turning ring 84 also has a radially extending projection 90 formed on the outer periphery thereof arranged to contact a mating projection 92 formed in the counterbore 82 of the respective cam 80 for returning the cams to inoperative or zero positions as will be presently described.

The opposite counterbore 82 of each cam 80 receives a spiral spring 94 as shown most clearly in Figure 5. The inner end 96 of each spring 94 is anchored in the shaft groove 88; whereas the outer end 98 is anchored in a groove 100 formed in the respective counterbore 82 of the respective cam 80. It will thus be apparent that upon turning of the shaft 58, the springs 94 will urge the cam 80 in the same direction, yet the cams may be held in a fixed rotative position during turning of the shaft 58 against the action of the springs. It is to be understood that each of the cams 80 is operated independent of every other cam, and that each cam is in sliding contact with an adjacent cam on one end and a spacer 30 on the other end. The end faces of each cam 80 are preferably machined smooth to reduce friction between each pair of cams and the spacers 30.

The outer periphery of each cam 80 has a transversely facing shoulder 102 formed thereon to contact the shank 104 of its respective knife 42 and zero position the cam 80 as will be more fully hereinafter set forth. The outer radius of each cam 80 is progressively increased from the lower end of the shoulder 102 through approximately one-half of the periphery of the cam until the increasing radius equals the radius at the outer end of the shoulder 102. Therefore, one-half 106 of the outer surface of each cam 80 varies in curvature to provide a cammed surface, while the remaining surface 108 is of uniform curvature. Some portion of the surface 108 of each cam 80 is always in sliding contact with a pressure block 110 rigidly secured on the bottom plate 22 of the housing 24. A block 110 extends between each pair of spacers 30 as shown in Figure 4 and has an upper curved surface 112 (Figure 3) formed on the same radius as the surfaces 108 of the adjacent cams 80 to receive the pressure on the knives 42 as will be hereinafter set forth.

As previously indicated, the knives 42 are disposed in the slots or chambers 40 of the head 36. The shanks 104 of the knives 42 are of a size to provide a sliding fit of two shanks in each chamber 40, whereby each knife is operated independently by one of the cams 80. The upper end or head portion 114 of each knife 42 is pyramidally shaped in cross-section to form a cutting edge 116 and provide outwardly extending flanges 118 over-hanging the head 36 at the opposite sides of the chamber 40. One end 120 of each knife head 114 is also extended to over-hang one-half of the adjacent spacer 30 and make contact with the knife 42 on the opposite side of the spacer as illustrated in Figure 4. Therefore, the knife heads 114 effectively cover the chambers 40 to prevent stone cuttings from entering the housing 24. It should also be noted that the shank 104 of each knife 42 is of a length to contact the respective cam 80 and retain the respective head 114 above the head 36 and spacers 30 in all positions of the cam 80. Therefore, the forces imposed on the knives 42 will be transmitted through the cams 80 and pressure blocks 110, rather than through the head 36. Furthermore, in Figure 2 it will be observed that the knives 42 are held in alignment in the head 36 to align the cutting edges 116.

A pair of guides 122 (Figures 1 and 2) are slidingly secured on the frame legs 12 to support a second knife housing 124 above the housing 24. The guides 122 engage (not shown) the legs 12 in the usual manner to prevent tilting of the guides and to retain the housing 124 parallel to the housing 24 as the housing 124 is moved up and down. A rotatable shaft 126 extends longitudinally through the housing 124 into the leg 12 above the hydraulic unit 64 and has a bell crank 128 on the outer end thereof. Another hydraulic unit (not shown) is secured in the respective leg 12 above the unit 64 and is powered from the pump 76, in the same manner as the unit 64.

The upper housing 124 has a head 130 secured in the lower end thereof to slidingly receive a row of knives 132 in alignment with the lower row of knives 42. The knives 132 may be constructed in substantially the same manner as the knives 42, however, the upper knives 132 should be keyed to the head 130 in a suitable manner (not shown) to permit vertical sliding of the knives 132 but prevent them from falling out of the head 130. Also, the head 130 and housing 124 may be constructed in the same manner as the lower head 36 and housing 24, except that the upper head 130 does not require pressure lubricating passageways 50 therein as shown in Figure 3 for the lower head 36. The upper knives 132 are preferably actuated by cams (not shown) on the shaft 126 in the same manner as the actuation of the lower knives 42.

The upper housing 124 is raised and lowered by a pair of hydraulic jack units generally indicated at 134. Each unit 134 comprises a cylinder 136 suitably secured in a vertical position to the upper frame member 14 and has a piston 138 reciprocally disposed therein. A piston rod 140 extends downwardly from each piston 138 through the lower end of the respective cylinder 136 and has a cross-head 142 on the lower end thereof. An aperture (not shown) extends vertically through each end of each cross-head 142 to loosely receive a bolt 144 extending upwardly from a buffer block 145 secured on the upper end of the housing 124. A helical compression spring 146 is disposed on each bolt 144 in contact with the bolt head and the cross-head 142 tending to retain the buffer block 145 in contact with the cross-heads 142, yet permit limited separate movements of the housing 124 and cross-heads 142.

Each cylinder 136 has a fluid conduit 148 providing communication between each end thereof and the pump 76 through suitable valving (not shown), whereby hydraulic fluids can be introduced into either end of the hydraulic units 134 for raising and lowering the housing 124. The valves for controlling the flow of fluid to the hydraulic units 134 are preferably of the type by which

the flow of fluid can be varied, whereby the speed of the pistons 138 can be controlled.

Operation

The stone slab 150 to be cut is supported on a horizontal roller conveyor 152 at a height where the stone can be pushed on top of the lower knives 42 when the knives 42 are in their lowermost positions. The conveyor 152 may be conveniently supported at one end by legs 154 extending upwardly from the front baffle plate 48 and at the opposite end by legs 156 extending on down to the floor or ground 158.

Prior to cutting or breaking the slab 150, the hydraulic units 134 are actuated to raise the housing 124 to the position shown in Figures 1 and 2, and the hydraulic unit 64 is actuated to retract the knives 42 in the position illustrated in Figure 3. The upper shaft 126 is placed in a rotative position similar to the lower shaft 58, whereby the upper knives 132 will be hanging below their operating cams. The slab 150 is then pushed over the knives 42 the desired distance, and the hydraulic units 134 are again actuated to lower the housing 124 until the upper knives 132 contact the upper surface of the slab 150.

It will be observed that the upper and lower surfaces of the slab 150 are uneven or rough, as is the usual case. Therefore, only a portion of the knives 42 will be in contact with the slab. Some of the knives 42 will be disposed opposite indentations in the slab 150 and will not make contact with the stone. Therefore, as soon as the housing 124 is in operating position as described above, the hydraulic unit 64 is actuated to turn the shaft 58 clockwise as shown in Figure 3, or counterclockwise as shown in Figure 5. Simultaneously, each spring 94 urges its respective cam 80 in the same direction to move the respective cam surface 106 under the respective knife 42. The cams 80 turn and force the knives 42 upwardly until the cutting edge 116 of each knife makes contact with the slab 150. As previously noted, each knife 42 is actuated separately, whereby it can move the necessary distance for contacting the stone. A continued turning of the shaft 58 merely winds each spring 94 after its respective knife 42 contacts the stone. The stroke of the hydraulic unit 64 is predetermined to turn the shaft 58 slightly less than one hundred eighty degrees, to assure complete operation of each cam 80. The knives 42 opposite the slab 150 will then all be in contact with the stone and will contact the stone along a straight line.

The upper knives 132 are actuated in the same manner to force each knife 132 into contact with the slab 150 at its lower end and in contact with its respective cam at its upper end. It will then be apparent that the knives 42 and 132 will be in contact with the slab 150 in the same vertical plane. The hydraulic units 134 are then again actuated to force the housing 124 down and provide a quick compressive force of the knives 42 and 132 on the slab 150. The stone will then break along the vertical plane containing the cutting edges of the knives 42 and 132. As the stone is broken or cut, the portion 160 that is cut off falls down on the rear baffle plate 48 and slides down the baffle into a suitable receptacle (not shown). The rear baffle 48 may be of any desired length.

Upon completion of the cutting operation, the hydraulic units 134 are actuated in the opposite direction to again raise the housing 124 into the position shown in Figures 1 and 2. Whereupon, the knives 42 and 132 are retracted, and the machine 8 is ready for another cutting operation. In retracting the knives 42, the hydraulic unit 64 is actuated to turn the shaft 58 counter-clockwise as shown in Figure 3, or clockwise as shown in Figure 5. As the projection 90 of each turning ring 84 moves through its respective counterbore 82, it will contact the respective cam projection 92. The respective cam 80 will then turn with the ring 84 until the shoulder 102 contacts the respective knife shank 104. The respective knife shank 104 will move downwardly over the cam surface 106 and will slide down through the head 36 by gravity until it reaches the position shown in Figures 3 and 4. Thus, all of the knives 42 will be retracted.

The cams for the upper knives 132 will be moved to their zero positions in the same manner to free the knives 132. The knives 132 will then again hang from the upper head 130 and be free to move up into the head 130 upon contact with the stone slab 150.

As previously mentioned, the pump 56 (Figure 1) continuously supplies lubricant under pressure through the discharge 54 and conduits 52 to the passageways 50 (Figure 3) in the lower head 36. The lubricant is forced through the smaller passageways 44 into each chamber 40 to lubricate the knives 42. The lubricant, being under pressure, also prevents the accumulation of sand or stone cuttings between the knives 42 and head 36, and drips downwardly onto the cams 80 to lubricate the cams and the shaft 58. Any lubricant dripping from the cams 80 collects in the bottom of the housing 24 and is discharged through spaced drain apertures 23 in the bottom plate 22 into the sump 20 for recirculation by the pump 56.

The upper knives 132 and head 130, being above the stone 150, will not tend to become clogged with sand or cuttings, as will the lower head 36 and knives 42. Therefore, the upper head 130 ordinarily does not require forced lubrication as in the lower head 36, and may be suitably lubricated periodically by spraying lubricant on the shanks of the knives 132 and their actuating cams. It should also be observed that the actuating mechanisms for each row of knives is totally enclosed and compactly constructed to provide no interference for workmen operating the machine 8.

From the foregoing it is apparent that the present invention provides a novel stone cutting machine which will materially increase the speed of stone cutting. The cutting knives or chisels are independently operated to contact the opposite sides of the stone in a common plane to provide a clean and straight cut. Each set of knives is operated by a single hydraulic unit and the entire machine is compactly constructed. A nominal amount of wear will occur and the knives will not become clogged with sand or cuttings. The machine is simple in construction and may be economically manufactured.

Changes may be made in the combination and arrangement of parts as heretofore set forth in the specification and shown in the drawings, it being understood that any modification in the precise embodiment of the invention may be made within the scope of the following claims without departing from the spirit of the invention.

I claim:

1. A stone cutting machine, comprising a frame, a pair of heads on said frame, one of said heads being movable on said frame toward and away from the other head, a row of knives slidably carried by each of said heads, said rows being arranged in opposed relation for cutting a stone positioned therebetween, a shaft rotatably carried by each of said heads, cam means on said shafts for engaging said knives and moving said knives independently into contact with the adjacent surface of the stone upon rotation of said shafts, and a power system for moving said one head and rotating said shafts.

2. In a stone cutting machine, an elongated supporting head having slots extending transversely therethrough, a plurality of stone cutting knives having heads and shanks, said shanks being slidably positioned in said slots to align said knife heads along said supporting head, a shaft rotatably carried by said supporting head adjacent the ends of said shanks, cams on said shaft arranged to contact said shanks and move said knives independently

in said slots upon rotation of said shaft, and means for rotating said shaft.

3. In a stone cutting machine, a frame, an elongated head secured on said frame in a substantially horizontal position, a row of vertically extending knives slidably carried by said head, said knives having upper ends and lower ends with said upper ends being pointed to cut the stone, a shaft rotatably carried by said head in proximity with the lower ends of said knives, a plurality of spring-loaded cams on said shaft, there being a cam arranged below each of said knives for contacting and raising each of said knives into contact with the stone independently of the other knives upon rotation of said shaft, and means for rotating said shaft.

4. In a stone cutting machine, a frame, an elongated head secured on said frame in a substantially horizontal position, a row of vertically disposed knives slidably carried by said head, said knives having upper ends and lower ends with said upper ends being pointed to cut the stone, a cam rotatably carried by said head below each of said knives for contacting the lower ends of said knives and raising said knives into contact with the stone, and means for rotating said cams independently for raising said knives independently.

5. In a stone cutting machine, a frame, an elongated head secured on said frame in a substantially horizontal position, a row of vertically disposed knives slidably carried by said head, said knives having upper ends and lower ends with said upper ends being pointed to cut the stone, a shaft rotatably carried by said head below and in alignment with the lower ends of said knives, a separate cam rotatably disposed on said shaft below each of said knives in contacting relation with the lower

end of the respective knife, springs connecting each of said cams to said shaft for turning said cams and raising said knives independently upon rotation of said shaft in one direction, and means for rotating said shaft.

6. In a stone cutting machine, a frame, an elongated head secured on said frame in a substantially horizontal position, a row of vertically disposed knives slidably carried by said head, said knives having upper ends and lower ends with said upper ends being pointed to cut the stone, a shaft rotatably carried by said head below and in alignment with the lower ends of said knives, a separate cam rotatably disposed on said shaft below each of said knives in contacting relation with the lower end of the respective knife, springs connecting each of said cams to said shaft for turning said cams and raising said knives independently upon rotation of said shaft in one direction, a key on said shaft adjacent each of said cams arranged to positively engage and rotate said cams upon rotation of said shaft in the opposite direction for lowering said knives, and means for rotating said shaft.

References Cited in the file of this patent

UNITED STATES PATENTS

2,152,193	Johanning	Mar. 28, 1939
2,188,318	Siderits	Jan. 30, 1940
2,453,216	Graham et al.	Nov. 9, 1948
2,552,958	Graham et al.	May 15, 1951

FOREIGN PATENTS

666,886	France	May 28, 1929
691,527	Germany	May 29, 1940