T. L. MAHONY.

SCREW LOCK FOR DOOR KNOBS.

APPLICATION FILED MAY 7, 1915.

1,150,689.

Patented Aug. 17, 1915.

Fig. 1.

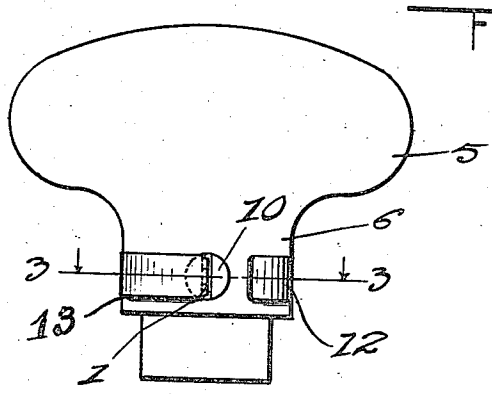

Fig. 2.

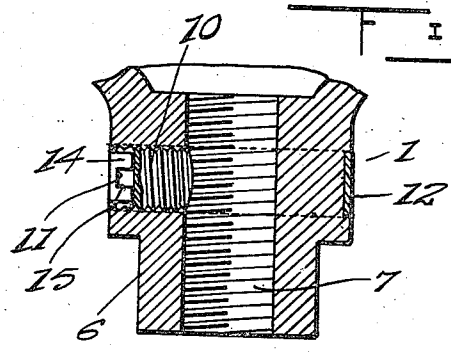

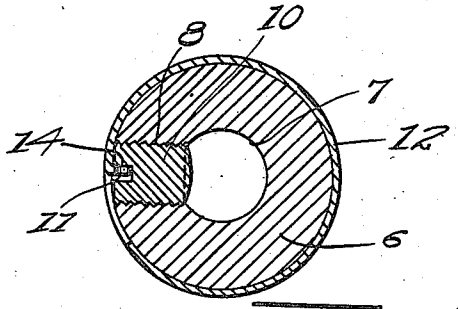

Fig. 3.

Fig. 4.

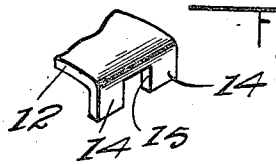

Witnesses

C. P. Beale.

Inventor

T. L. Mahony.

By [signature] Attorney

UNITED STATES PATENT OFFICE.

TIMOTHY L. MAHONY, OF SAN FRANCISCO, CALIFORNIA.

SCREW-LOCK FOR DOOR-KNOBS.

1,150,689. Specification of Letters Patent. Patented Aug. 17, 1915.

Application filed May 7, 1915. Serial No. 26,557.

To all whom it may concern:

Be it known that I, TIMOTHY L. MAHONY, a citizen of the United States of America, residing at San Francisco, in the county of San Francisco and State of California, have invented certain new and useful Improvements in Screw-Locks for Door-Knobs; and I do hereby declare the following to be a full, clear, and exact description of the invention, such as will enable others skilled in the art to which it appertains to make and use the same.

This invention has for its primary object to provide a simple and efficient holder or lock attachable to the shank of a door knob for preventing loosening and consequent loss of the screw that fastens the knob to its shaft.

Another object is the provision of a screw lock for door knobs including essentially a spring band, having an angularly directed end adapted to engage in the slot in the head of the screw and having a notch in the angularly directed end adapted to receive a suitable pointed instrument whereby the lock may be conveniently removed from the knob.

With these and other objects in view, the invention consists in the novel construction, arrangement and formation of parts as will be hereinafter specifically described, claimed and illustrated in the accompanying drawing, in which:

Figure 1 represents a side elevation of an ordinary door knob, illustrating the improved lock applied thereto. Fig. 2 represents a fragmental longitudinal sectional view through one end of the knob, illustrating the lock in section. Fig. 3 represents a transverse sectional view on the line 3—3 of Fig. 1, and Fig. 4 represents a fragmental perspective view of one end of the locking element for the screw.

Referring to the drawing in detail, wherein similar reference numerals designate corresponding parts, throughout the several views, the numeral 5 indicates a door knob of the usual or any preferred construction having a reduced end or shank 6 formed with a recess 7, constituting a socket in which is inserted the shaft (not shown) for operating the door lock. As usual, the reduced extremity or shank 6 is formed with an internally screw-threaded aperture 8 intersecting the recess or bore 7 in the shank 6 and receiving the lock screw 10 adapted to engage the shaft (not shown) to reliably lock the latter against rotational movement within the socket 6. As usual, the outer extremity of the lock screw 10 is formed with a diametrical slot 11 adapted to receive the point of a screwdriver, whereby the screw is advanced to the desired position with relation to the shaft.

It is a well known fact that the vibration to which the door and knobs are subjected during opening and closing thereof frequently loosens the securing screws 10 for the knobs, and thus when the knob is grasped and pulled to open or close the door the knob is withdrawn from the shaft. In remedying this difficulty I provide a spring band 12 which partially incloses the reduced extremity or socket 6 of the knob and is preferably fitted within a circumferential groove 13 to insure against lateral movement of the band. One end of the band 12 is bent angularly, as indicated at 14, to define an inwardly directed tongue 14, which is adapted to engage within the diametrical slot 11 of the screw 10 to lock the latter against rotational movement with relation to the socket 6. The material from which the band is formed is of less thickness than the width of the slot 11 in the screw 10, as clearly shown in Fig. 3, and a notch 15 is formed centrally in the tongue 14 to receive a suitable pointed tool, whereby the end of the band may be moved downwardly with relation to the socket 6 so as to disengage the tongue 14 from the slot 11 and permit adjustment of the screw 10.

What I claim is:

In combination, a door knob including a socket having a circumferential groove therein, a screw fitted in said groove and hav-

ing a slot in the outer end thereof, an annular spring band snugly fitted in said groove having an angularly directed end constituting a locking tongue removably engaged in the slot in the screw and being of less thickness than the width of the slot to permit the insertion of a pointed tool, said tongue having a notch therein adapted to receive a tool whereby the band may be removed from the door knob.

In testimony whereof I affix my signature in presence of two witnesses.

TIMOTHY L. MAHONY.

Witnesses:
J. D. PHELPS,
R. W. MCELROY.