Feb. 23, 1932. M. H. WHITE 1,846,824

BERTH

Filed Nov 9, 1928 3 Sheets-Sheet 1

Fig. 1.

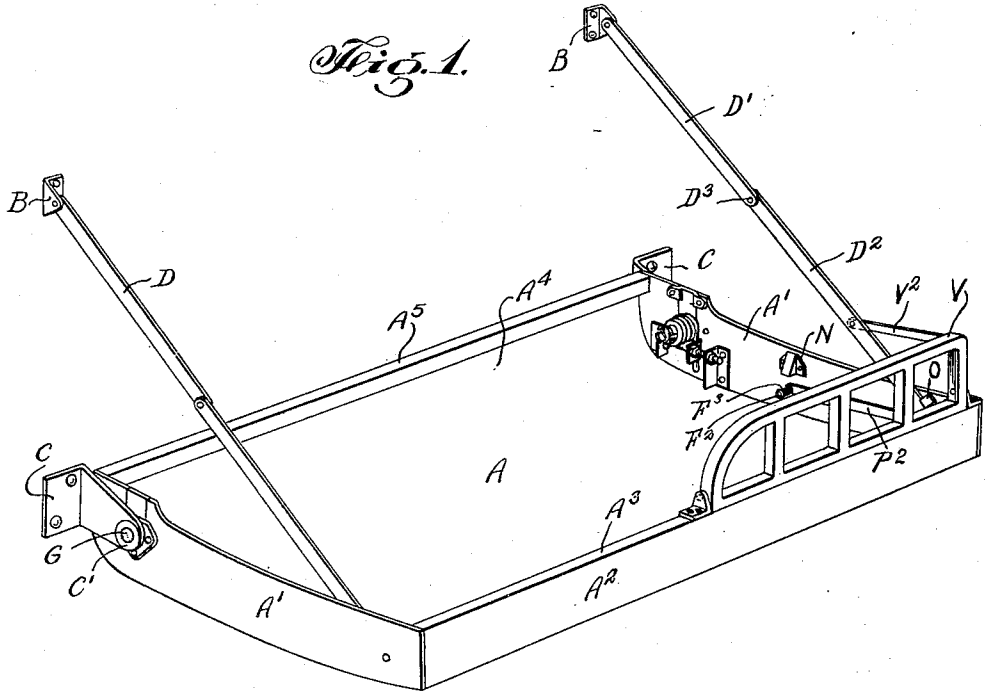

Fig. 2.

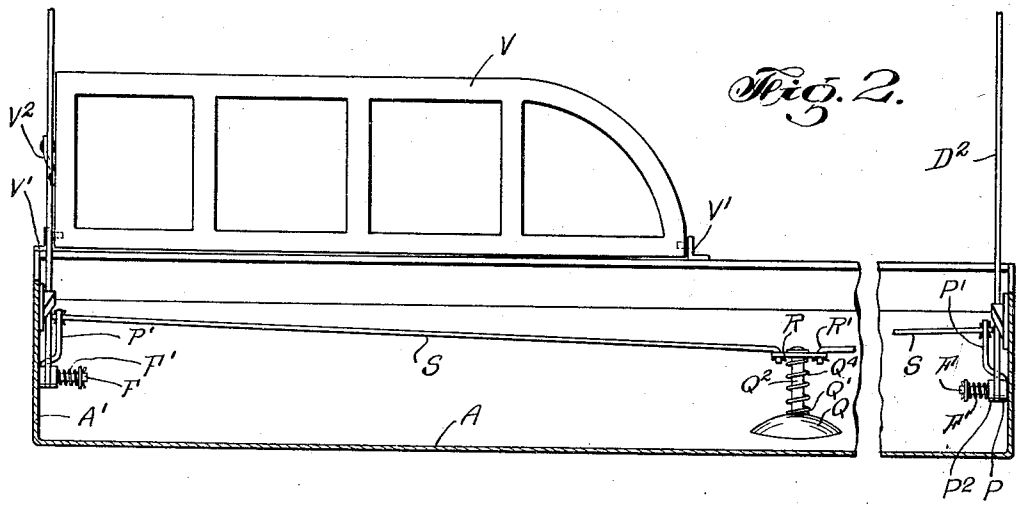

INVENTOR.
MARMADUKE H. WHITE

BY John E. Hubbell
ATTORNEY

Feb. 23, 1932. M. H. WHITE 1,846,824

BERTH

Filed Nov 9, 1928 3 Sheets-Sheet 2

Fig. 4.

Fig. 3.

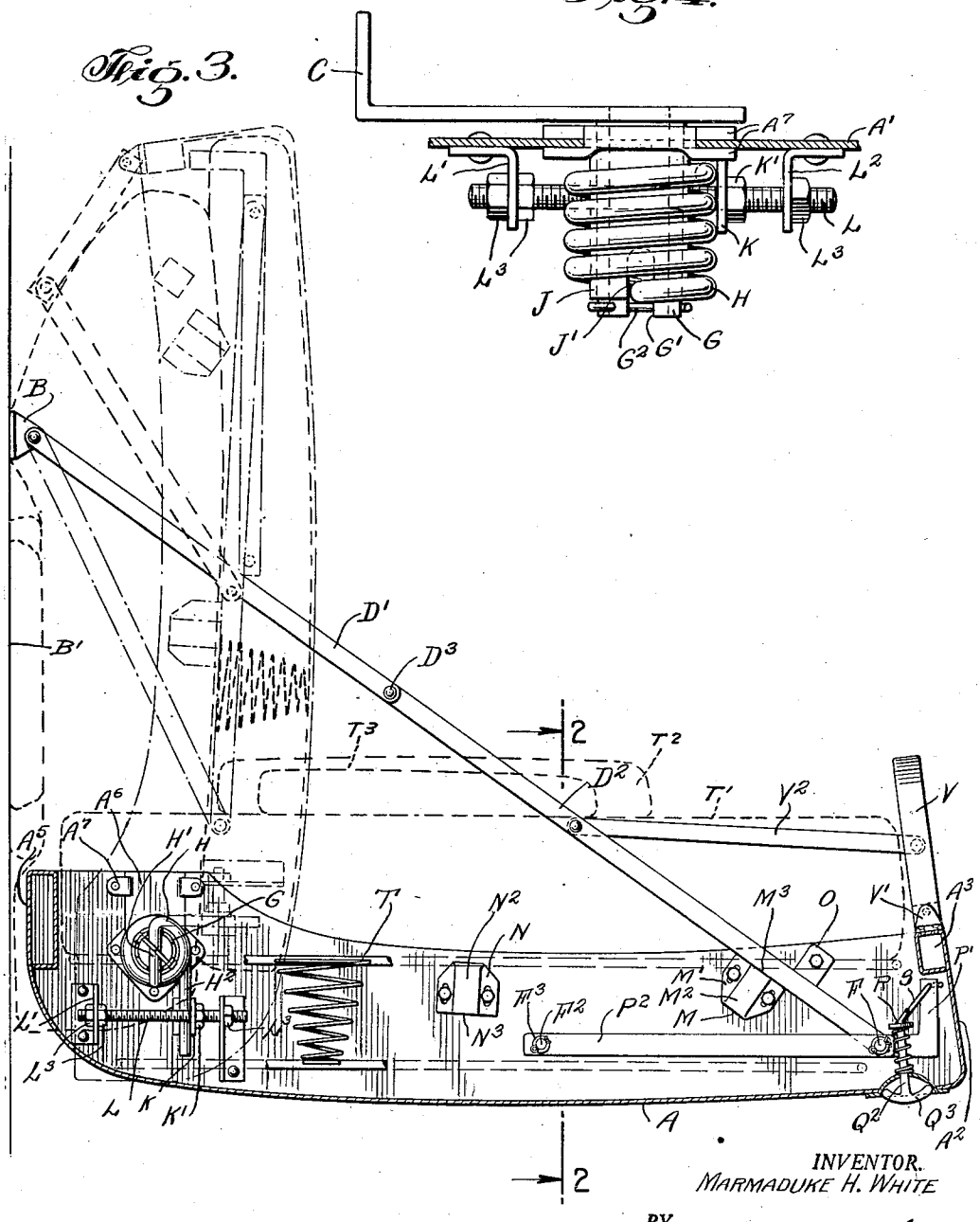

INVENTOR.
MARMADUKE H. WHITE

BY John E. Dubbell
ATTORNEY

Feb. 23, 1932. M. H. WHITE 1,846,824

BERTH

Filed Nov 9, 1928 3 Sheets-Sheet 3

Fig. 5.

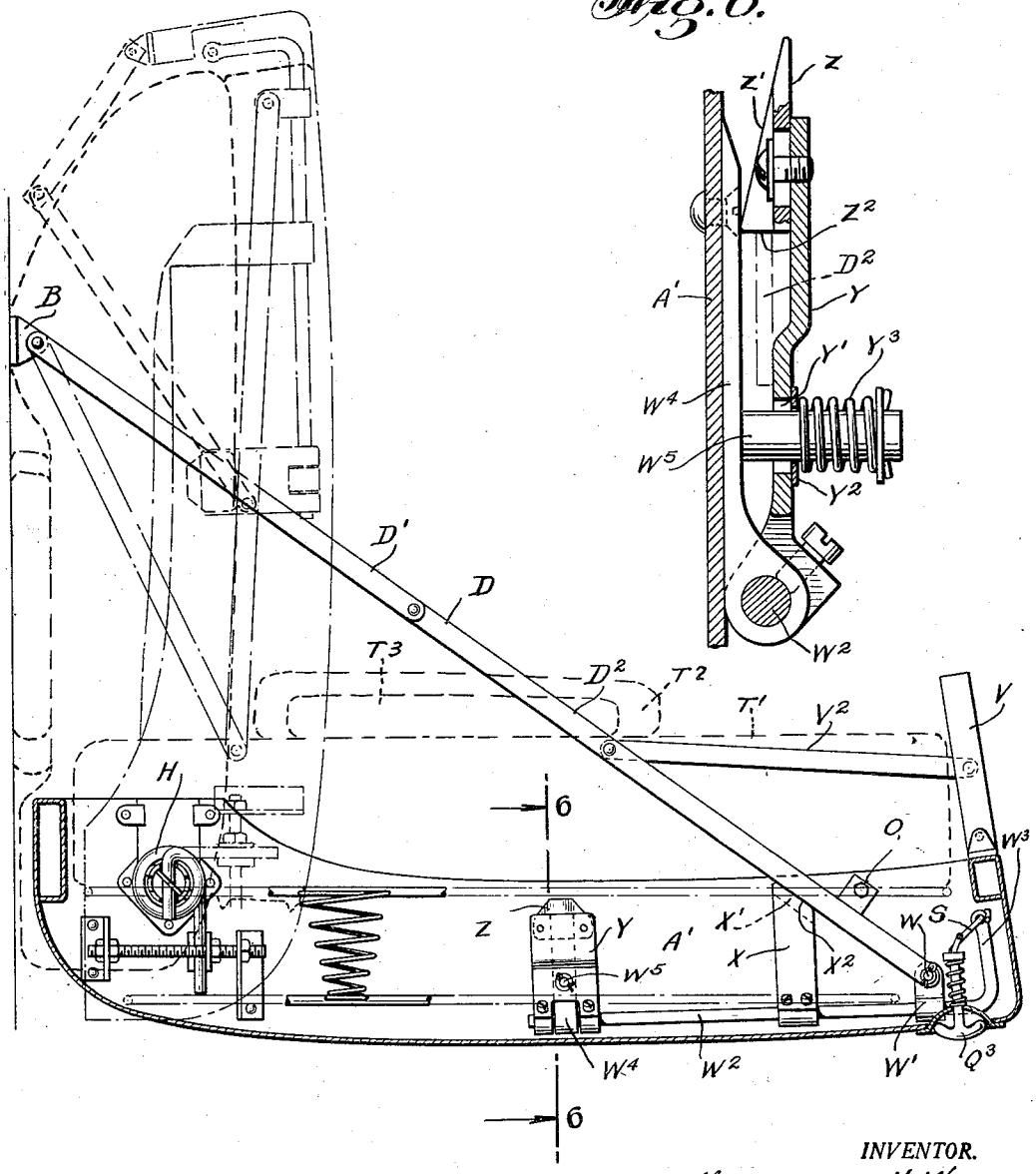

Fig. 6.

INVENTOR.
MARMADUKE H. WHITE
BY
John E Hubbell
ATTORNEY

Patented Feb. 23, 1932 1,846,824

UNITED STATES PATENT OFFICE

MARMADUKE H. WHITE, OF BALTIMORE, MARYLAND, ASSIGNOR TO THE ROME COMPANY, INC., OF ROME, NEW YORK, A CORPORATION OF NEW YORK

BERTH

Application filed November 9, 1928. Serial No. 318,118.

My present invention relates to the construction and mode of operation of berths of the type in which the berth is pivotally supported and movable relative to its support from a substantially vertical or closed position to a substantially horizontal or open position for use and vice versa. Berths of this type are particularly adapted for use in railroad sleeping cars and marine vessels. The general object of my invention is to provide an improved construction and arrangement of the parts of a berth of this type and particularly to provide simple and effective provisions whereby the berth is more easily and safely operated than has been possible heretofore.

The object of my invention is attained by the provision of torsion spring mechanism for balancing the weight of the berth; by provisions for automatically locking the berth in its closed and open positions; by the provision of a single manually operated releasing mechanism; by means for automatically raising and lowering the lee rail when the berth is moved to its open and closed positions, respectively; and by the arrangement of the berth parts and accompanying spring and mattress in such a manner that vibration and rattling of the parts is eliminated.

The various features of novelty which characterize my invention are pointed out with particularity in the claims annexed to and forming a part of this specification. For a better understanding of the invention, however, and the advantages possessed by it reference should be had to the accompanying drawings and descriptive matter in which I have illustrated and described preferred embodiments of the invention.

Of the drawings:

Fig. 1 is a perspective of a berth embodying my invention;

Fig. 2 is a section on the line 2—2 of Fig. 3;

Fig. 3 is a transverse section through the apparatus shown in Fig. 1;

Fig. 4 is an enlarged plan view of part of the balancing mechanism;

Fig. 5 is a view similar to Fig. 3 of a modified construction; and

Fig. 6 is a section on the line 6—6 of Fig. 5.

In Figs. 1 to 4 of the drawings I have illustrated one embodiment of my invention in which the berth comprises a body A, preferably of sheet steel, having vertical wall end portions A′, a vertical front wall portion A^2 having its upper edge bent to form a rectangular reinforcing beam A^3 on its inner side and a rear wall portion A^4 also bent to provide a hollow reinforcing beam A^5.

As illustrated in Figs. 1 and 3 the berth is normally supported from a vertical wall or similar support B′ by upper brackets B horizontally spaced apart and lower brackets C, the brackets C being spaced slightly further apart than the brackets B. Supporting braces D, each comprising upper and lower flat bars D′ and D^2, respectively, rectangular in cross section are pivotally connected to the brackets B and to the inner side of the end wall portions A′ adjacent the front wall A^2. The pivotal connection of each lower bar D^2 with the berth body comprises a fixed pin F projecting inwardly from the inner side of wall A′. A compression spring F′ mounted on the pin F acts on the lower end of the corresponding bar D^2 to press it towards the wall end of the pin. Each pair of bars D′ and D^2 have their adjacent ends pivotally connected by a pivot pin D^3.

The berth body is pivotally supported at each end on a hollow pin G having its outer end rigidly connected to the corresponding bracket C. A bearing A^6 is removably mounted on a vertical slot in the end wall A′ and held therein by clips A^7 on each side of the bearing and plate. The pin G serves as an arbor for a sleeve J, the outer end of which is positioned in the bearing A^6. The inner end of the pin G and sleeve J are formed with registering slots G′ and J′, respectively, in which the inner end H′ of a torsion spring H arranged on and surrounding the sleeve J is positioned. The spring end H′ is held in the slots G′ and J′ by a locking pin G^2 extending diametrically through the pin G. The spring H is so wound on the sleeve J that when the berth is in the open position, the spring is under torsion with its outer end H^2 extending downwardly and tangentially

therefrom. This end is held in that position by an angle plate K mounted on a horizontal adjustment screw L and adjustably positioned thereon by a nut K′ to vary the torsion of the spring. The screw L is adjustably mounted in spaced angle brackets L′ and L^2, each of which is secured to the inner side of the end wall A′. Locking nuts L^3 maintain the position of the screw relative to the brackets L′ and L^2. The torsion spring is so adjusted that the thrust of the tangential portion H^2 on the plate K tending to force the berth body upwardly balances the weight of the berth body, operating mechanism, and berth accessories.

With the construction heretofore described it is advantageous to provide suitable means for holding the berth locked not only in the vertical closed position, but also in the open position. In the present embodiment locking means for this purpose are provided at each end of the berth for engaging each brace bar D^2 and comprise a latch keeper M consisting of a flat plate portion M′ on both sides of an inclined surface M^2, the upper end of which is a plane surface M^3. Each latch keeper M is adjustably mounted on the inner side of the corresponding wall A′ by a bolt and slot connection with each plate portion M′ and the keeper arranged in such a manner that the lower surface of the arm D^2 contacts with and is supported on the flat end portion M^3 when the brace arms are extended. A latch keeper N similar in construction to the latch keeper M, is also mounted on each wall A′ at a point horizontally spaced towards the rear of the berth from the latch keeper M. The keeper N is arranged with its inclined surface N^2 extending in a substantial vertical direction and the flat end portion N^3 at the bottom of the keeper. A lug O is mounted on each end plate between the corresponding latch keeper M and the front side of the berth body. The lower surface of the lug O is positioned parallel to the plane surface M^3 and separated therefrom by a space sufficient to receive the brace bar D^2 for a purpose hereinafter described.

Manually operated releasing mechanism is provided in the berth construction for simultaneously releasing the brace arm at each end of the berth from engagement with the corresponding latch keepers in both the open and closed positions of the berth. In the embodiment shown the releasing mechanism comprises an L-shaped lever P mounted on each end plate A′. Each lever is arranged in a vertical plane with its short leg portion P′ adjacent the front wall of the berth and with its long horizontal leg loosely mounted on the pin F and a similar pin F^2, horizontally and rearwardly spaced therefrom. The lever is positioned on the pin F between the brace bar D^2 and the wall A′. A second lever P^2, similar in form to the lever P except for omitting the leg P′, is positioned on the pins F and F^2 on the inner side of the lever P. The lower pivoted end of the bar D^2 is arranged on the pin F between the levers P and P^2 and the parts held in the assembled position by the action of the compression spring F′ and a spring F^3 on the pin F^2. The lever P^2 serves as a guide for the brace arm D^2 during the movements of the latter. With this arrangement, the levers P and P^2 and the brace arm D^2 are adapted to be moved laterally on the pin F.

An elliptically shaped recessed escutcheon plate Q is mounted in a suitable opening in the body lower surface adjacent the front thereof and provided with an opening Q′ through which a pull key Q^2 is passed with its curved handle portion Q^3 normally maintained in the recessed escutcheon plate by a compression spring Q^4 mounted on the inner end of the key. The spring Q^4 is held in position between the rear side of the escutcheon plate and a pull keeper plate R secured on the rear end of the key. The plate R is substantially diamond shaped with an opening R′ formed at each end thereof for receiving one end of an operating rod S, the other end of which is connected to the offset end of the short vertical leg portion P′ of the lever P.

A spring T comprising a plurality of interconnected coils and a mattress T′ are usually positioned in the berth body as indicated by the broken lines in Figs. 3 and 5 with the upper portion of the mattress projecting beyond the curved upper edges of the body end walls. The spring can be held in position in the berth by suitable clips arranged on the inner side of the body side and end walls.

In berths of this type it is customary to provide a lee rail of a well known form adjacent the head end of the berth to prevent the occupant from rolling out. In the present berth construction the lee rail V is automatically maintained in a substantially vertical position on the front side of the berth when the latter is in the open position and collapsed when the berth is moved to the closed position. As shown in Figs. 2 and 3, the lee rail is constructed of rectangular steel tubing and pivotally connected at its ends to the beam A^3 at the front of the berth by pivot brackets V′. This method of connecting the lee rail to the berth permits the same lee rail construction to be used on either right or left hand berths. A link V^2 is pivotally connected to the front end of the lee rail and an intermediate portion of the brace bar D^2.

With the parts constructed and arranged substantially as shown and described and the berth in its lowered position, as illustrated in full lines in Fig. 3, the braces D are prevented from breaking downwardly by the engagement of the bars D^3 with the latch

keepers M, and from breaking upwardly by the lugs O. When it is desired to raise the berth to the position shown in dotted lines in Fig. 3, the pull key is pulled out against the action of the spring Q^4 to remove the key from the recess in the plate and permit the key to be rotated. On rotation of the key in either direction the pull keeper plate R is turned to operate the rods S and levers P. Each lever P is moved inwardly against the action of the springs F′ and F^3 to force the corresponding brace bar D^2 off the flat surface M^3 of the latch keeper M. This movement having been accomplished the berth can easily be raised to the closed position with the aid of the torsion springs H. When each brace bar D^2 is released from engagement with the latch keeper, the jointed brace is still prevented from breaking upwardly by the contact of the bar D^2 with the projecting lug O. As the berth is raised and the bars D′ and D^2 move inwardly and downwardly, the lee-rail receives a corresponding pivotal movement until it contacts with and presses down on the mattress and spring. As the berth approaches the vertical position each bar D^2 contacts with the inclined surface N^2 on the latch keeper N and, the pull key being then released, is forced downwardly and laterally until it slides over the lower end of the latch keeper and is held in contact with the flat lower surface of the keeper by the springs F′ and F^3. Before raising the berth to its closed position, the pillows T^2 and blankets T^3 ordinarily used are placed on the mattress T′, as indicated in Fig. 3. On being raised to the closed position, the upper surface of the mattress, pillows and folded blankets will contact with the surface of the wall B′. The final raising movement of the berth effects a compression of these articles and the spring T between the wall B′ and the bottom of the berth. The outer portions of the mattress and spring will be compressed by the lee rail V, when the latter is used. The maintenance of the mattress and spring under compression and fixed in position when the berth is in its upper closed position is especially advantageous in avoiding the noise that would otherwise occur by the shifting of these and other parts in the berth due to the movements of the vehicle or vessel in which the berth is used.

When it is desired to lower the berth for occupancy the pull key is operated in the same manner as before to release the bars D^2 from engagement with the rear latch keeper and the berth is moved downwardly against the increasing force of the torsion spring. As the berth is opened, the lee rail is raised and each bar D^2 moved upwardly and laterally on the corresponding inclined surface M^2 until it slips over and is held on the flat portion of the keeper M.

In Figs. 5 and 6 I have illustrated a modified construction of the brace bar locking means in which the lateral movement and end play of the brace bars are eliminated and the berth is released from the locking positions by a positive movement of the locking elements relative to the brace bars. In this construction each brace bar D^2 is pivotally connected to a fixed pin W in a location similar to that of the pin F. A bearing plate W′ is supported from the pin W between the bar D^2 and the wall A′ and arranged to rotatably support the front end of an L-shaped control rod W^2. The short leg portion W^3 of the control rod is connected to the operating rod S in any suitable manner. The rear end of the control rod is rotatably mounted in the lower end of a bearing plate W^4 secured to the end wall A′. The rear bearing plate is provided with a pin W^5 projecting inwardly from an intermediate portion thereof.

A front latch keeper X has its lower end secured to an intermediate portion of the control rod and its upper edge inclined at an angle similar to that of the bar D^2 in the extended position. The latch keeper is formed at its side adjacent the end wall with a short outwardly inclined portion X′ leading to the plane top surface X^2 of the keeper.

A second latch keeper is provided at a point rearwardly of the keeper X and comprises a supporting plate Y having its lower end enlarged to receive and be secured to the control rod W^2 at each side of the bearing plate W^4. The plate Y is formed with an opening Y′ through which the pin W^5 projects. The opening Y′ has a greater diameter than the pin W^5 and a washer Y^2 on the pin prevents the adjacent end of a compression spring Y^3 on the pin from entering the opening Y′. The spring Y^3 is held on the inner end of the pin by suitable means. A latch keeper Z substantially similar in construction to the latch keepers M and N of Figs. 1 to 3, is adjustably mounted on the outer side of the supporting plate Y with its inclined surface Z′ extending from the lower plane surface Z^2.

With the modified form of locking means described, each brace bar D^2 is locked in the open position of the berth by its engagement with the corresponding front latch keeper. When it is desired to release the brace rod to permit the closing of the berth, the pull key Q^3 is operated in the usual manner to move the operating rod S. The rod S causes the control rod W^2 to turn thereby moving the front latch keeper out of engagement with the brace bar D^2 and permitting the brace to break downwardly. Upward breaking of the brace is prevented as usual by the lug O. When the pull key is released, the control rod and keepers are restored to their normal position by the action of the spring Y^3.

As the berth is moved towards the closed position with the assistance of the torsion spring H and the keepers are in their normal position, the brace bar D^2 comes into contact with the inclined surface Z' of the rear latch keeper. On further movement of the berth towards the closed position, the bar D^2 is moved downwardly forcing the rear latch keeper and supporting plate to move about the axis of the control rod against the action of the spring Y^3. The latch keeper is forced inwardly until the brace bar passes over the end of the inclined surface Z' into the position indicated in broken lines in Figs. 5 and 6. The deflecting force being removed, the latch keeper is returned to the position shown in Fig. 6 by the spring Y^3 and holds the brace bar locked until the operating mechanism is again operated to release the brace bar. The connections between the control rod and pull key are arranged to permit the slight rotation of the keepers and control rod under the camming movement of the brace bar during the berth closing movement without affecting the position of the pull key.

The berth constructions illustrated and described are characterized by their simplicity, effectiveness, and compactness. The constructions are light, rigid and metallic throughout. With the operating features described and shown, the berth can be operated easily and safely. The berth can be raised and lowered safely even if for some reason the torsion springs are rendered inoperative.

While in accordance with the provisions of the statutes, I have illustrated and described the best forms of my invention now known to me, it will be apparent to those skilled in the art that changes may be made in the form of the apparatus disclosed without departing from the spirit of my invention as set forth in the appended claims, and that in some cases certain features of my invention may be used to advantage without a corresponding use of other features.

Having now described my invention what I claim as new and desire to secure by Letters Patent is:—

1. A berth adapted for movements between open and closed positions comprising a berth body pivotally connected to a support, means for supporting said body at another point, and means for locking said last mentioned means when the berth is in its open position.

2. A berth adapted to be moved between open and closed positions comprising a berth body pivotally connected to a support, means for supporting said body at another point, and means for locking said last mentioned means when the berth is in its closed position.

3. A berth adapted to be moved between open and closed positions comprising a berth body pivotally connected to a support, means for supporting said body at another point, and means for locking said last mentioned means when said body is in its open and closed positions.

4. In a berth structure, a pivotally supported berth body adapted to be moved between open and closed positions, a lee-rail pivotally connected to one side of said berth body, and means for automatically moving said lee-rail between a lower vertical position and an upper inwardly folded position on corresponding movements of said berth body.

5. In a berth structure, a berth body adapted to be moved between open and closed positions, a pivoted brace arranged to support said body, a lee-rail connected to one side of said berth body, and means for automatically lowering and raising said lee-rail when said body is closed and opened, respectively, said means comprising a link having a pivotal connection with said lee-rail and brace.

6. A berth adapted to be moved between open and closed positions comprising a berth body pivotally connected to a support, means connecting said body to a second point of support, said means comprising a folding brace at one end of said body and having a fixed pivotal connection therewith, and means for locking said brace in one of the positions of said body.

7. A berth adapted to be moved between open and closed positions comprising a berth body pivotally supported adjacent its rear side, a folding brace pivotally connected to one end of said body, means for locking said brace in one of the positions of said body, and means for releasing said brace from said locking means.

8. A berth adapted to be moved between open and closed positions comprising a berth body pivotally supported adjacent its rear side, a folding brace pivotally connected to one end of said body, a latch keeper positioned in the path of movement of said brace, said keeper having an inclined surface and a substantially plane surface, and said parts being so arranged that said brace contacts with said inclined surface during a pivotal movement of said body until said brace passes onto said plane surface.

9. A berth adapted to be moved between open and closed positions comprising a berth body pivotally supported adjacent its rear side, a folding brace pivotally connected to one end of said body, means for preventing movement of said brace in one direction while said body is in each of said positions, and additional means preventing movement of said brace in another direction while said body is in one of said positions.

10. A berth adapted to be moved between open and closed positions comprising a berth body pivotally supported adjacent its rear side, a folding brace pivotally connected to one end of said body, a latch keeper for preventing movement of said brace in one direc-

tion while said body is in each of said positions, and a lug mounted on the side of said body for preventing said brace from breaking upwardly while said body is in said open position.

11. A berth adapted to be moved between open and closed positions comprising a berth body, means for pivotally supporting said body adjacent its rear side, a foldable brace pivotally connected to one end of said body and spring mechanism arranged to assist the movement of said body to its closed position and to retard the movement of said body to its open position.

12. A berth adapted to be moved between open and closed positions comprising a berth body, means for pivotally supporting said body adjacent its rear side, and torsion spring mechanism engaging said pivot means and adjusted to substantially assist the movement of said body to its closed position and to substantially retard the movement of said body to its open position.

13. A berth adapted to be moved between open and closed positions comprising a berth body having an end wall, means for pivotally supporting said body adjacent its rear side, a torsion spring mechanism engaging said end wall and arranged to assist the movement of said body to its closed position and to retard the movement of said body to its open position, and means on said end wall for adjusting the torsion of said spring.

14. A berth adapted to be moved between open and closed positions comprising a berth body pivotally supported adjacent its rear side, a vertical wall surface adjacent said rear side, a spring positioned in said body, and a mattress mounted on said spring, said parts being so proportioned and arranged that said spring is compressed between said wall surface and berth body when the berth is in its closed position.

15. A berth adapted to be moved between open and closed positions comprising a berth body pivotally supported adjacent its rear side, a folding brace pivotally connected to one end of said body, front and rear latch keepers positioned in the path of movement of said brace when said body is being moved, means on each of said latch keepers for engaging said brace in one of the positions of said body, and operating means for effecting a relative movement between said latch keepers and brace whereby said brace is released from engagement with one of said latch keepers.

16. A berth adapted to be moved between open and closed positions comprising a berth body pivotally supported adjacent its rear side, a folding brace pivotally connected to one end of said body, front and rear latch keepers positioned in the path of movement of said brace when said body is being moved to its open and closed positions respectively, means on each of said latch keepers for engaging said brace in one of said positions, and means for moving said latch keepers out of engagement with said brace, said means comprising a rotatably mounted control rod secured to said latch keepers and manually operated means connected to said control rod and arranged to rotate the same about its longitudinal axis.

17. A berth of the character described comprising a berth body, a movable brace bar for supporting said body, and a latch keeper mounted on said berth body in the path of movement of said bar and having a cam surface acted on by said bar after a predetermined movement, means for preventing the return of said bar, and manually operable means for rendering said last mentioned means ineffective.

18. In a berth of the character described, a berth body having an opening adjacent one side thereof, a recessed plate positioned in said opening, a pull key slideably mounted in said plate, and a spring at the inner side of said body for normally holding said pull key in said recessed plate.

19. A berth adapted to be moved between a lower open position and an upper closed position relative to a fixed support and comprising a berth body having an end wall member, a pivot pin extending from said support through said end wall, a coiled torsion spring surrounding said pin at the inner side of said wall member, said pin being constructed to receive and hold one end of said spring, a plate mounted on said wall member and arranged to engage the other end of said spring, and means for adjusting the position of said plate on said wall member to vary the force of said spring.

20. A berth adapted for movements between a lower open position and an upper closed position and comprising a body, means for pivotally supporting said body adjacent one side, a supporting member connected to a substantially opposite portion of said body and arranged to change its position during the berth movements, locking means mounted on said body for engaging and holding said supporting member in each of said berth positions, and manually operable means for freeing said supporting member from said locking means.

Signed at Baltimore, in the county of Baltimore and State of Maryland, this 7th day of November, A. D. 1928.

MARMADUKE H. WHITE.