June 20, 1950 R. A. BRUCE 2,512,517

WIRE CONTAINER HAVING A WIRE STACKING RING

Filed May 7, 1949 2 Sheets-Sheet 1

Fig. 1

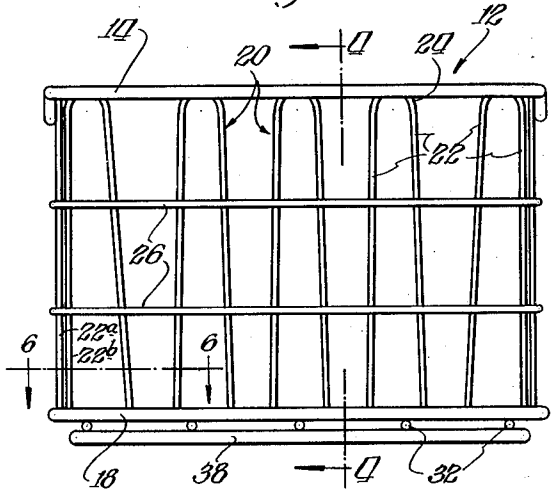

Fig. 2

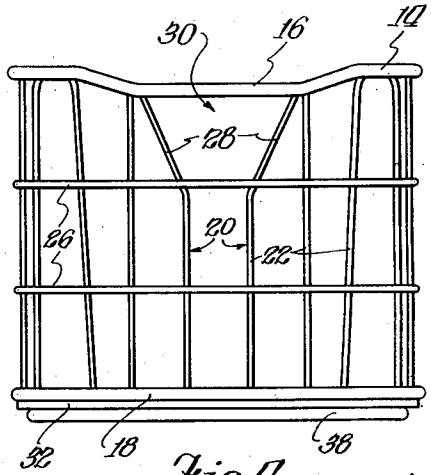

Fig. 3

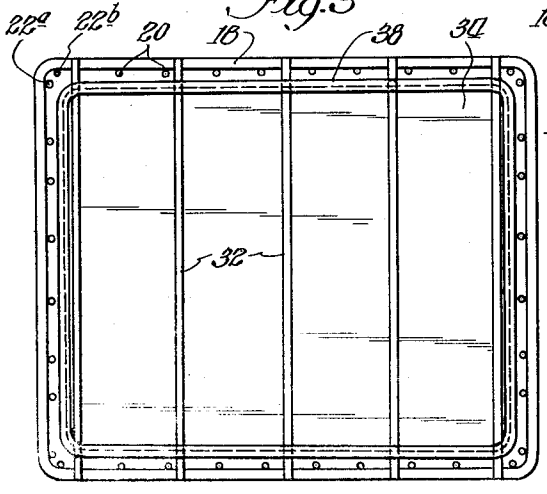

Fig. 4

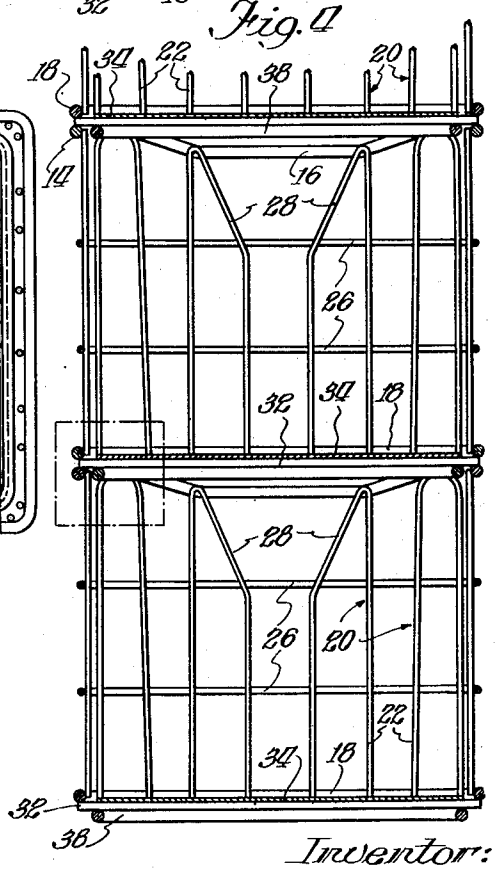

Inventor:
Robert A. Bruce
By: Bair & Freeman
Atty's.

June 20, 1950 R. A. BRUCE 2,512,517

WIRE CONTAINER HAVING A WIRE STACKING RING

Filed May 7, 1949 2 Sheets-Sheet 2

Fig. 5

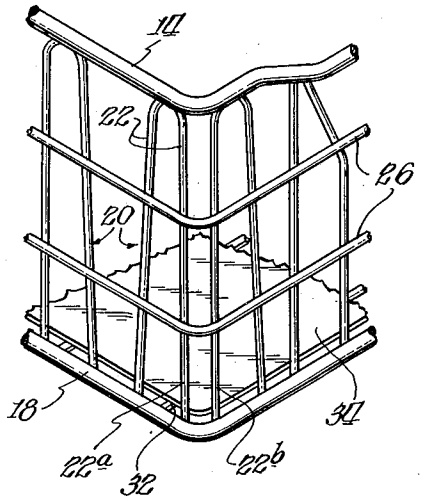

Fig. 8

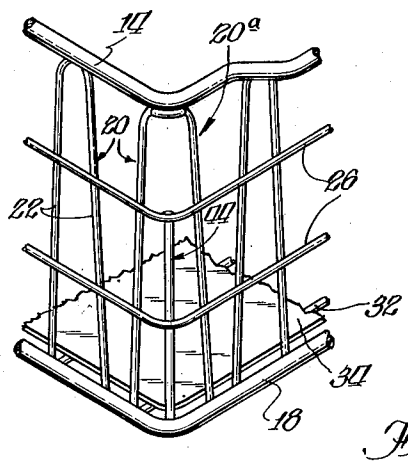

Fig. 7

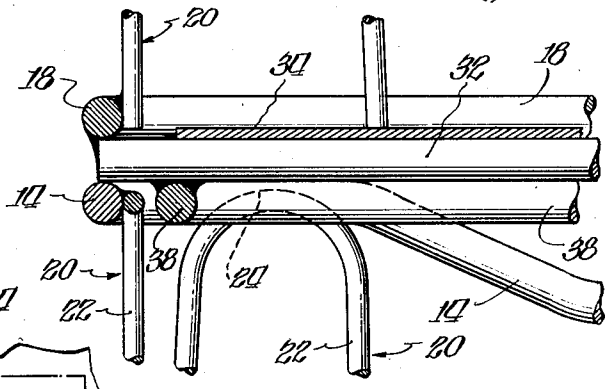

Fig. 6

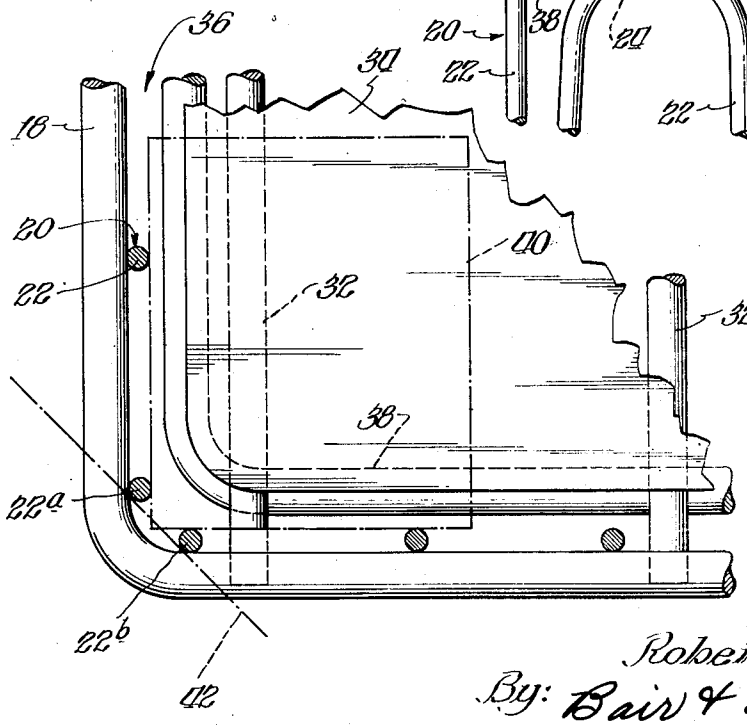

Inventor:
Robert A. Bruce
By: Bair & Freeman
Attys.

Patented June 20, 1950

2,512,517

UNITED STATES PATENT OFFICE

2,512,517

WIRE CONTAINER HAVING A WIRE STACKING RING

Robert A. Bruce, Keosauqua, Iowa, assignor to Barker Equipment Company, Inc., Keosauqua, Iowa, a corporation of Iowa

Application May 7, 1949, Serial No. 91,917

6 Claims. (Cl. 220—97)

1

This invention relates to cases for carrying milk bottles, primarily, but of course may be used for carrying other articles or containers.

An object of the invention is the provision of a wire carrying case having a novel stacking means on the bottom thereof, whereby cases can be readily and easily stacked one on top of another, and the stacking means on each case is fitted into the open top of the case below.

Another object is the provision of an open-work case constructed of wire, of novel construction and having a stacking ring secured to the bottom of the case, in which the stacking ring is of lesser dimension than the case and is adapted to be fitted into the open top of a case below on which it is stacked.

A further object is the provision of a wire construction, open-work carrying case having such a construction that a stacking ring can be provided on the bottom of the case for fitting into the open top of the case below on which it is stacked, thereby enabling the elimination of projections extending upwardly beyond the upper edge of the case proper, which were heretofore believed necessary for stacking purposes.

Still another object is the provision of an open-work wire carrying case, adapted for carrying paper milk cartons, having a novel corner construction whereby the corners of the cartons are prevented from protruding through the corners of the case and becoming damaged thereby.

With these and other objects in view, this invention consists in the construction, arrangement and combination of the various parts of the device whereby the objects contemplated are attained, as hereinafter more fully set forth, pointed out in my claims, and illustrated in the accompanying drawings, wherein:

Figure 1 is a side elevational view of the carrying case embodying the present invention;

Figure 2 is an end view of the case;

Figure 3 is a bottom view;

Figure 4 is a vertical sectional view of a plurality of cases in stacked relation, each case being illustrated as if taken on the line 4—4 of Figure 1;

Figure 5 is an isometric view of one corner of the case;

Figure 6 is an enlarged detail view of a portion of the case taken on line 6—6 of Figure 1;

Figure 7 is an enlarged detailed view of that portion of Figure 4 enclosed in dot-dash lines; and

Figure 8 is an isometric view of one corner of a modified form of case.

2

One of the considerations taken into account in connection with carriers or cases for milk bottles has to do with sanitation regulations. When milk is carried in glass bottles and the empty bottles are returned to the dairy or distributor, the kind of carrying case employed therefor must be of the type that can be readily cleaned. Such cases are and have been ordinarily of open-work construction, or at least the bottom of the cases were of such construction. The carrying case of the present invention is designed so that it can be employed for returning empty milk bottles. It is also desirable that the carrying case be employed for carrying paper cartons of milk. For carrying paper cartons it is not essential that the carrying case be of open-work construction because the cartons are not returned after they are empty. However, it is desirable that the same kind of carrying cases be employed for carrying either glass bottles or paper cartons. In the case of paper cartons it has been found difficult to handle the carrying cases when full of cartons because the corners of the cartons projected out through the corners of the cases and were subject to injury or damage. The carrying case of the present invention is effective for preventing injury to the cartons of milk in addition to the fact that it is of open-work construction for purposes of fulfilling sanitary requirements.

Referring in detail to the drawings, the carrying case is shown as a whole at 12 and includes a top perimeter frame wire 14 which is of heavy guage wire shaped in the form of a rectangle and having a continuous or closed perimeter. Figure 1 shows one of the broad sides of the carrier and Figure 2 shows one of the ends. At each end is a depressed segment 16 of the frame wire which forms a handle portion for carrying the case. In plan view however, the shape of the top frame wire is regular and of rectangular shape.

The numeral 18 refers to a bottom perimeter frame wire which is congruent with the top frame wire 14 and is preferably of the same gauge. Likewise the bottom frame wire 18 has a continuous or closed periphery.

The top frame wire 14 and bottom frame wire 18 are interconnected by a plurality of hairpin wires 20 welded thereto and serving to space the frame wires apart and form the sides of the case. It might be pointed out here that all of the various elements making up the carrier are welded together and given a smooth finish at the points of welding so that the carrying case can be readily

cleaned. Each of the hairpin wires 22 has a pair of vertically disposed legs 22 interconnected at the top by a loop or bend 24. The legs 22 diverge slightly downwardly and the lower ends are welded to the bottom frame wire 18.

As observed in the various figures it will be noted that each hairpin wire 20 is so disposed that both of its legs 22 are on the same side of the carrier case. Those hairpin wires which are adjacent the corners of the case are so disposed that one leg 22 of each is closely adjacent the corner of the case, that is to say, the outermost legs are near the corner of the case. Considering any two sides which converge to form a corner of the case, the individual legs of the respective hairpin wires which are nearest that corner on those two sides are disposed relatively close together. For purposes of convenience these two legs are referred to as 22*a* and 22*b* in Figures 1, 5 and 6. These two individual legs, namely, 22*a* and 22*b* are disposed more closely together than the two legs of any one hairpin wire and these two individual legs form an effectively closed corner of the case which would otherwise be of more open-work construction if it were not for those two legs being arranged in such close relationship. The purpose and effectiveness of this relationship will be pointed out in detail later.

The hairpin wires 20 are disposed on the inner surface of the respective segments of the frame wires 14 and 18 and are thereby on the inner side of the case. It will also be noted that the hairpin wires 20 are within the vertical limits determined by the upper surface of the top frame wire 14 and the lower surface of the bottom frame wire 18.

Intermediate and between the frame wires 14 and 18 are perimeter wire elements 26, spaced relatively with respect to one another and spaced vertically with respect to the frame wires. The perimeter members 26 are welded to the hairpin wires 20 and serve to strengthen the case.

At the ends of the case as view in Figures 2 and 4 the two hairpin wires 20 which are disposed adjacent the middle are provided with diagonal segments 28 which diverge upwardly with respect to each other, forming an enlarged opening indicated generally at 30 through which the user can insert his hand for grasping the handle element 16.

Secured to the undersurface of the bottom frame wire 18 is a plurality of wire members 32 which are spaced apart relatively to one another and extending across the bottom of the case. The illustration shows the wire members 32 extending across the short dimension of the case, but it is obvious that they may extend in the other direction if desired.

Secured on the wire members 32 on the upper side thereof is a plate element 34 which is in the form of a sheet metal plate and covers the greater part of the bottom of the case. The plate element 34 is welded directly to the wire members 32 and preferably to all of them continuously throughout the full length of each of the wire members. Reference to Figures 3 and 6 will show that the plate member 34 is of lesser transverse dimensions than the respective dimensions of the bottom frame wire 18 and is centered with respect thereto, so that a perimeter space indicated generally at 36 is formed around the case between the plate element 34 and the bottom frame wire 18. If preferred, a series of flat wires may be employed instead of a plate. Such flat wires are secured to the wire members 32 in spaced apart relation and extend the full dimension of the case, being arranged so that several are under each row of milk cartons.

Secured to the undersurface of the wire members 32 is a stacking ring 38 which is preferably of the same gauge as the frame wires 14 and 18. The stacking ring 38 has a continuous periphery and is of lesser transverse dimensions than the respective dimensions of the frame wires. The corresponding elements of the stacking ring 38 are offset inwardly from the bottom frame wire 18 and also inwardly from the hairpin wires 20. Preferably the stacking ring 38 is welded to each of the wire elements 32 at its points of contact with the latter.

As mentioned in the introduction herein the cases are adapted for stacking and such an arrangement is illustrated in Figures 4 and 7. Each case is set on the case therebelow with the stacking ring 38 fitted in the open top of the case on which it is stacked. The stacking ring 38 is offset inwardly so that it will clear the hairpin wires 20 in the case below and the outer ends of the wire elements 32 rest directly on the upper frame wire 14 on the case below as illustrated most clearly in Figure 7. The upper case is therefore provided with solid support through the plurality of supporting points provided by the ends of the wire members 32. The stacking ring 38 prevents each case from being dislodged from its stacked position by engaging the upper rim of the case below.

It will be obvious that since the stacking ring 38 has a continuous perimeter the case can be set on a flat surface and be supported solidly thereon. The case of the present invention can also be stacked with wooden cases which have heretofore been in common usage.

An advantage of the invention will be evident from the description thus far. In open-work constructions it has been found heretofore that a stacking ring could not be conveniently secured to the bottom of the case and it was necessary to provide projections extending upwardly beyond the upper rim of the case. In such instances the bottom of each case was provided with cut-out portions so that when the cases were stacked, the cut-out portions in the bottom of the case would receive the upwardly extending projections on the case below. One way of forming such upstanding projections was to extend certain of the hairpin wires 20 upwardly beyond the upper rim of the case at the corners thereof. In the present construction such projections extending above the upper rim of the case have been eliminated and a more advantageous case has evolved. This has resulted from the fact that the case of the present invention has such a construction as to enable the securement of the stacking ring 38 on the bottom of the case.

The numeral 40 (Figure 6) indicates a rectangular milk carton. Such milk cartons are made of paper and consequently are subject to damage or injury. The case is of such dimensions that the cartons fit tightly in the case and the corner cartons would tend to project out through the corners of the case if some provision were not made for preventing it. Attention is directed to the lower left corner of Figure 6 which shows one corner of the carton projected slightly through the space between the legs 22*a* and 22*b*. The dot-dash line 42 is illustrated on the drawing to show what small portion of the carton extends beyond a tangent line touching the outermost surfaces of the legs 22*a* and 22*b*. It will be observed that only the

slightest portion of the corner of the carton does so extend and if any object were accidentally forced against the corner of the case the carton would not be seriously damaged, if at all, because the carton will yield to the extent necessary to prevent breaking or cracking of the carton. Thus, the special arrangement of the legs 22*a* and 22*b* results in an effectively closed corner of an open-work carrying case.

It is desired to point out here also that the arrangement of the legs 22*a* and 22*b* may be considered a direct result of the possibility of eliminating upwardly extending projections on the cases for stacking purposes as was referred to above. Formerly the hairpin wires 20 straddled the corners and the upper looped ends were extended above the top edge of the case. In such an arrangement it was difficult to provide a construction for the protection of the cartons. However, in the present construction since there is no need for the hairpin wire to straddle the corner, the individual legs 22*a* and 22*b* can be positioned closely adjacent the corner as above described in detail.

Figure 8 illustrates a construction whereby a corner protection construction is provided in that instance where it is desired to have one of the hairpin wires straddle the corner. The numeral 20*a* indicates one such hairpin wire straddling the corner and in order for the hairpin wire to be properly secured, the legs thereof diverge slightly downwardly with the result that normally the corner of the case would be such that the corner of a milk carton would project outwardly between the legs an objectionable extent. In order to prevent such an event a reenforcing wire member 44 is welded to the bottom frame wire 18 and to the intermediate perimeter members 26 in a position directly at the corner. If desired of course the wire member 44 can be extended upwardly to join the top of the hairpin wire 20*a*. With the provision of the wire 44 the corner of the milk carton will be protected against any object being accidentally forced against the corner of the carton which extends between the legs of the hairpin wire 20*a*.

While I have herein shown and described certain preferred forms of my invention, manifestly they are susceptible of modification and rearrangement of the parts without departing from the spirit and scope thereof. I do not, therefore, wish to be understood as limiting my invention to the precise forms herein disclosed, except as I may be so limited by the appended claims.

I claim as my invention:

1. In an open wire-work carrying case of the character disclosed, a top perimeter frame wire and a bottom perimeter frame wire of congruent outline shape relative to each other, spaced vertical wire members secured to and interconnecting said frame wires, a plurality of spaced apart bottom wire members secured to the under surface of said bottom frame wire and extending across the case, the ends of said bottom wire members extending substantially to the outer surfaces of the respective portions of the bottom frame wire, said bottom wire members constituting means for supporting articles placed in the case, and a stacking ring separate from said bottom frame wire secured to the under surface of said bottom wire members, said stacking ring being of lesser transverse dimensions than the respective dimensions of said bottom frame wire, said case being adapted to

be stacked on a similar case, whereby the bottom frame wire of the upper case is in vertical registry with the top frame wire of the lower case with the ends of said bottom wire members interposed therebetween, and said stacking ring on the upper case being disposed within and adapted to engage the top frame wire of the lower case and prevent the upper case from sliding off the lower case.

2. In an open wire-work carrying case of the character disclosed, a top perimeter frame wire and a bottom perimeter frame wire of congruent outline shape relative to each other, spaced vertical wire members secure to and interconnecting said frame wires, a plurality of spaced apart bottom wire members secured to said bottom frame wire and extending across the case, said bottom wire members constituting means for supporting articles placed in the case, and a stacking ring separate from said bottom frame wire secured to the under surface of said bottom wire members and extending below said bottom frame wire, said stacking ring being of lesser transverse dimensions than the respective dimensions of said bottom frame wire, said case being adapted to be stacked on a similar case, whereby the bottom frame wire of the upper case is in vertical registry with the top frame wire of the lower case, and said stacking ring on the upper case being disposed within and adapted to engage the top frame wire of the lower case and prevent the upper case from sliding off the lower case.

3. In an open wire-work carrying case of the character disclosed, a top perimeter frame wire and a bottom perimeter frame wire of congruent outline shape relative to each other, spaced vertical wire members secured to and interconnecting said frame wires, a plurality of spaced apart bottom wire members secured to said bottom frame wire and extending across the case, a supporting member secured to the upper surface of said bottom wire members for supporting articles placed in the case, said supporting member being of lesser transverse dimensions than the respective dimensions of said bottom frame wire whereby a perimeter space is formed between the two, and a stacking ring separate from said bottom frame wire secured to the under surface of said bottom wire members and extending below said bottom frame wire, said stacking ring being of lesser transverse dimensions than the respective dimensions of said bottom frame wire, said case being adapted to be stacked on a similar case, whereby the bottom frame wire of the upper case is in vertical registry with the top frame wire of the lower case, and said stacking ring on the upper case being disposed within and adapted to engage the top frame wire of the lower case and prevent the upper case from sliding off the lower case.

4. In an open wire-work carrying case of the character disclosed, a top perimeter frame wire and a bottom perimeter frame wire of congruent outline shape relative to each other, spaced vertical wire members secured to and interconnecting said frame wires, said vertical wire members being disposed entirely within the vertical distance determined by the upper surface of the top frame wire and the under surface of the bottom frame wire, a plurality of spaced apart bottom wire members secured to said bottom frame wire and extending across the case, said bottom wire members constituting means for supporting articles placed in the case, and a stacking ring separate from said bottom frame wire secured to the

under surface of said bottom wire members and extending below said bottom frame wire, said stacking ring being of lesser transverse dimensions than the respective dimensions of said bottom frame wire, said case being adapted to be stacked on a similar case, whereby the bottom frame wire of the upper case is in vertical registry with the top frame wire of the lower case, and said stacking ring on the upper case being disposed within and adapted to engage the top frame wire of the lower case and prevent the upper case from sliding off the lower case.

5. In an open, wire-work carrying case, of the character disclosed, a top perimeter frame wire and a bottom perimeter frame wire of congruent outline shape relative to each other, spaced vertical hairpin wires secured to and interconnecting said frame wires, said hairpin wires being disposed entirely within the vertical distance determined by the upper surface of the top frame wire and the under surface of the bottom frame wire, each hairpin wire having vertical legs and being disposed entirely on one of the sides of the case, said hairpin wires being so disposed that at each corner of the case, the adjacent legs of the hairpin wires which are on opposite sides of the corner or disposed closely adjacent each other so as to form an effectively closed corner, and the corner of an article placed in the case can extend through the corner of the case a distance substantially no greater than to a position coincident with a line tangent to the outer surfaces of said corner legs, a plurality of spaced apart bottom wire members secured to said bottom frame wire and extending across the case, said bottom wire members constituting means for supporting articles placed in the case, and a stacking ring separate from said bottom frame wire secured to the under surface of said bottom wire members and extending below said bottom frame wire, said stacking ring being of lesser transverse dimensions than the respective dimensions of said bottom frame wire, said case being adapted to be stacked on a similar case, whereby the bottom frame wire of the upper case is in vertical registry with the top frame wire of the lower case, and said stacking ring on the upper case being disposed within and adapted to engage the top frame wire of the lower case and prevent the upper case from sliding off the lower case.

6. In an open, wire-work carrying case of the character disclosed, said case having ends and sides, a top perimeter frame wire and a bottom perimeter frame wire of congruent outline shape relative to each other, a plurality of vertical wire members secured to and interconnecting said frame wires, said vertical wire members being disposed entirely within the vertical distance determined by the upper surface of the top frame wire and the under surface of the bottom frame wire, each end portion of the top frame wire having a central depressed segment, said vertical wire members adjacent said depressed segments having portions displaced outwardly away from each other thereby forming hand-hold openings immediately below said depressed segments to enable a user to grip said depressed segments, a plurality of spaced apart bottom wire members secured to said bottom frame wire and extending across the case, said bottom wire members constituting means for supporting articles placed in the case, and a stacking ring separate from said bottom frame wire secured to the under surface of said bottom wire members and extending below said bottom frame wire, said stacking ring being of lesser transverse dimensions than the respective dimensions of said bottom frame wire, said case being adapted to be stacked on a similar case, whereby the bottom frame wire of the upper case is in vertical registry with the top frame wire of the lower case, and said stacking ring on the upper case being disposed within and adapted to engage the top frame wire of the lower case and prevent the upper case from sliding off the lower case.

ROBERT A. BRUCE.

REFERENCES CITED

The following references are of record in the file of this patent:

UNITED STATES PATENTS

Number	Name	Date
1,291,693	Behringer	Jan. 14, 1919
1,874,299	Jarvis	Aug. 30, 1932
1,947,932	Fante	Feb. 20, 1934
1,991,770	Pawsat	Feb. 19, 1935
1,992,411	Bruce	Feb. 26, 1935
2,243,625	Gettleman	May 27, 1941
2,355,946	Bitney	Aug. 15, 1944