M. E. AHLBORN.

HEAD AND BACK REST.

APPLICATION FILED APR. 25, 1914.

**1,156,125.** Patented Oct. 12, 1915.

Fig. 1.

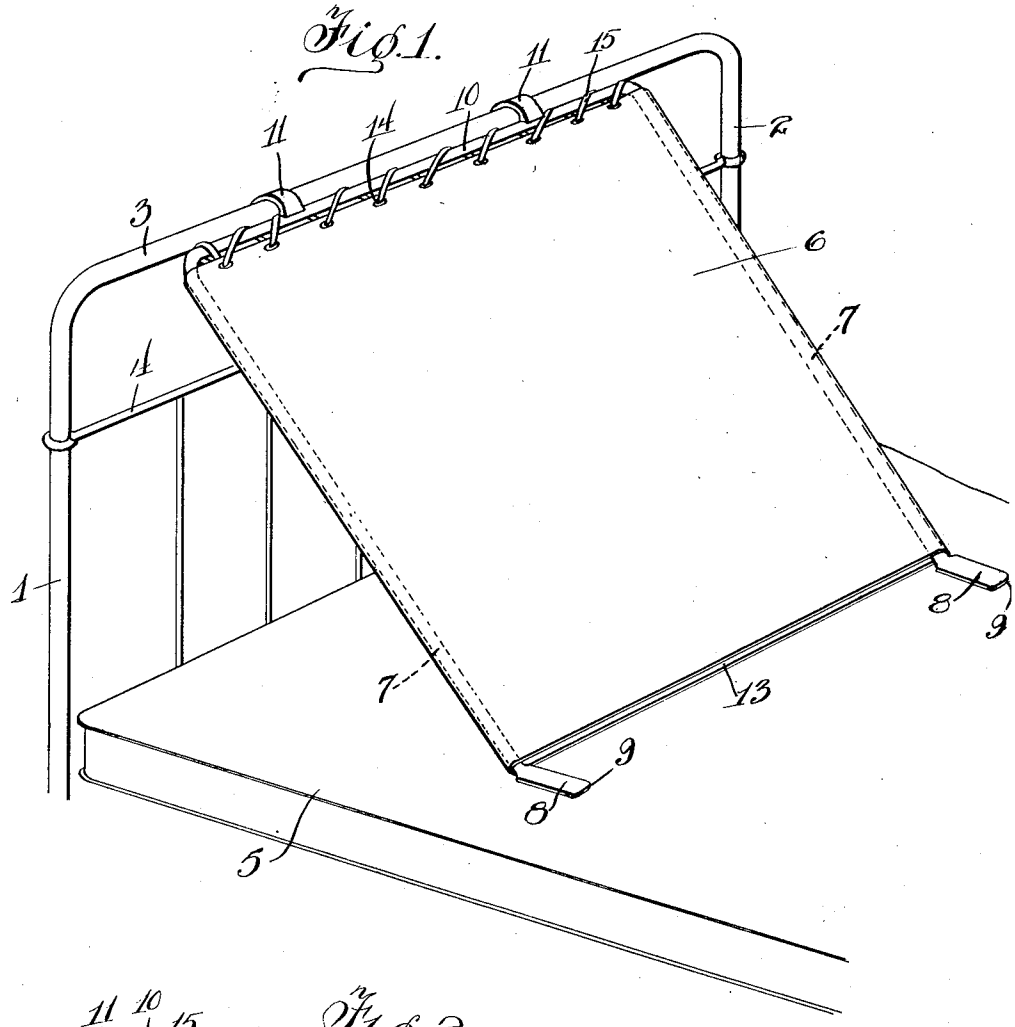


Fig. 2.

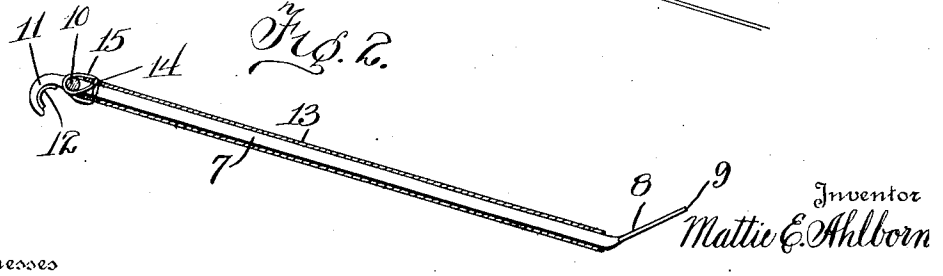


Witnesses

W. C. Mulligan

H. H. Downing.

Inventor

Mattie E. Ahlborn

By Richard Lawson

his Attorney

# UNITED STATES PATENT OFFICE.

MATTIE E. AHLBORN, OF DAYTON, OHIO.

## HEAD AND BACK REST.

1,156,125. Specification of Letters Patent. Patented Oct. 12, 1915.

Application filed April 25, 1914. Serial No. 834,481.

*To all whom it may concern:*

Be it known that I, Mrs. MATTIE E. AHLBORN, a citizen of the United States, residing at Dayton, in the county of Montgomery and State of Ohio, have invented certain new and useful Improvements in Head and Back Rests, of which the following is a specification.

My invention relates to head and back rests for beds, used especially for hospital service, and has for its primary object to provide a support for the head and back of the patient, permitting the latter to be held in a recumbent position.

Another object of my invention is to provide a device of the character described having means in connection therewith for engagement with the cross-pieces of a bed for adjustably supporting the back of the patient at various desired inclinations, the engaging means having protecting means secured thereto for preventing the disfiguring or marking of the bed.

A further object of my invention is to provide improved means on the lower end of the head rest for preventing undue wear on the mattress and sheets.

A still further object of my invention is to provide an improved pillow support for removable engagement with the head rest formed of washable material having means in connection therewith for securely holding the same in a normal position.

A still further object of my invention is to provide a device of the character described which is simple in construction, efficient in operation, sanitary and one that can be placed on the market and manufactured at a minimum cost.

Other objects as well as the nature, characteristic features and scope of my invention will be more readily understood from the following description taken in connection with the accompanying drawings and pointed out in the claim forming a part of this specification.

Referring to the drawings:—Figure 1 represents a perspective view of my invention in position on a bed; and Fig. 2 represents a transverse sectional view of my invention.

Referring more particularly to the drawings in which similar reference numerals designate corresponding parts throughout the different views, I provide the head of a bed which in this instance comprises side posts 1 and 2 preferably integrally connected by means of a cross-piece 3 and further provided with an inner supporting frame 4. Detachably connected to the cross piece 3 and resting upon the mattress 5 positioned on the bed, is my improved head and back rest 6. The rest in this instance consists essentially of a substantially U-shaped frame which is formed preferably of rod iron and bent upon itself to provide parallel legs 7, the latter having the free outer ends bent at an obtuse angle thereto and flattened to provide elongated substantial oblong feet 8 which have their outer edges rounded as at 9 to prevent the same from cutting or otherwise marking the mattress or the sheets disposed thereon.

For the purpose of supporting the rest 6, I have formed integral in spaced intervals with the connecting bar 10 of the frame, a plurality of substantially flat hook-like engaging members 11 which have secured to the inner surface thereof, preferably by means of cement, protecting strips 12 which consist essentially of thin felt for preventing undue wear or disfiguration on the cross-pieces of the bed. When it is desired to adjust the inclination of the rest it can easily be seen that the engaging members 11 can be removed from the cross-piece 3 and engaged upon the cross-piece of the inner frame positioned beneath the cross piece 3. Because of the lightness of this rest the patient may himself adjust the rest to either of these positions at his leisure. In order to obviate the slightest inconvenience to the patient it is preferable that the relative angles of the feet to the legs conform substantially to the mattress when the rest is in supporting position on the cross piece of the inner frame.

A pillow support 13 formed of scrim or like material, in the form of a slip is removably secured about the legs 7. By forming the pillow support of scrim, which material possesses great wearing qualities besides yielding to the curvature of the patient's back, the same can be easily and quickly washed, all of which features aid in making the same efficient and sanitary. Again, it can be easily seen that when pillows are placed upon this support they will maintain their position on the same, due to the frictional engagement with the scrim and will not slide or become otherwise displaced as is usually the case in those supports formed of

wood or the like. If it is desired the legs 7 of the frame may be slightly diverged and because of the resiliency of the material of which the frame is formed, a tension will be placed on the pillow support. For the purpose of securely holding the scrim in a normal position on the frame and for preventing the same from having sliding engagement therewith, I have provided adjacent the upper marginal edges of the support a plurality of uniformly spaced openings 14 through which openings passes a piece of tape 15, the latter being wrapped about the connecting bar 9 of the frame and passed through the adjacent opening successively throughout the length of the support. When it is desired to remove the support from the frame for the purpose of cleaning or washing, all that is necessary to do is to release the piece of tape 15 and slide the support from the frame.

It is obvious from the construction and arrangement of the engaging members, the shank or body portion of which extends in the same substantial plane of the rest, may be engaged over the cross-piece at the foot of the bed, not shown, when it is desired to air the same or when the same is not required by the patient.

It must be noted from the above description taken in connection with the drawing, that I have provided a head and back rest comprising a few simple parts which can be adjusted to various inclinations and which parts can be easily and cheaply manufactured and placed upon the market at a minimum cost.

It will be understood that the above description and accompanying drawings comprehend only the general and preferred embodiment of my invention and that various minor changes in detail of construction, proportion and arrangement of the parts may be made within the scope of the appended claim and without sacrificing any of the advantages of my invention.

Having thus fully described my invention, what I claim as new and desire to secure by Letters Patent, is:—

A head and back rest for beds including a frame formed from a single piece of rod metal and bent upon itself into a substantially U-shaped configuration to provide a pair of spaced parallel supporting legs, elongated flat feet formed on each of said legs by flattening the terminals thereof, the edges of said feet being rounded to prevent the tearing of the bed clothes when the device is in position, said feet being disposed at an angle to said legs, flat hook-like engaging members formed integral with the vertex of the frame and adapted for engagement with the cross piece of a bed for maintaining the vertex in close parallel relation therewith, a pillow support slip removably arranged about the legs for yieldingly supporting the back and head of a patient, said pillow support slip being provided with a plurality of uniformly spaced openings adjacent the upper marginal edge thereof, and a piece of tape passing through said openings and about the vertex of said frame alternately throughout the vertex of the frame for removably holding said support in a position adjacent the vertex of the frame.

In testimony whereof I affix my signature in presence of two witnesses.

MRS. MATTIE E. AHLBORN.

Witnesses:

D. W. IDIEFS,

RUTH JACKSON.