United States Patent [19]

Mageoh

[11] **3,731,671**

[45] **May 8, 1973**

[54] **LOW-FRICTION CATHETER GUIDE**

[75] Inventor: **Nelson H. Mageoh,** 3301 N.E. 5th Avenue, Fla.

[73] Assignee: **Cordis Corporation,** Miami, Fla.

[22] Filed: **Oct. 21, 1971**

[21] Appl. No.: **191,186**

[52] **U.S. Cl.**.....**128/2.05 R,** 128/2 M, 128/349 R

[51] **Int. Cl.**...**A61m 23/00,** A61b 5/02, A61b 17/00, A61b 5/10

[58] **Field of Search**.....128/2.05 R, 127, 128/348, 349 R, 303, 2, 2 M

[56] **References Cited**

UNITED STATES PATENTS

2,118,631	5/1938	Wappler	128/349 R
3,060,972	10/1962	Sheldon	128/2 M
3,452,742	7/1969	Muller	128/2 M
3,485,237	12/1969	Bedford	128/2 M
3,521,620	7/1970	Cook	128/2.05 R
3,528,406	9/1970	Jeckel	128/2.05 R

Primary Examiner—Aldrich F. Medbery
Attorney—George W. Crowley

[57] **ABSTRACT**

A low-friction catheter guide for facilitating the insertion of catheters into the vascular system of human beings or animals, especially where insertion through relatively long lengths of blood vessels is involved. Friction is minimized by forming a catheter guide over which the lumen of the enclosing catheter passes and contact between the two is reduced to a series of point contacts. The guide is formed in such a fashion that a series of radial extensions or protuberances constitute the contact areas. A preferred method of forming the guide is by winding a wire upon a non-circular mandrel and permitting the coil to unwind slightly after it is removed from the mandrel. The unwinding or springback results in adjacent convolutions of the coil being rotated slightly with respect to each other.

7 Claims, 4 Drawing Figures

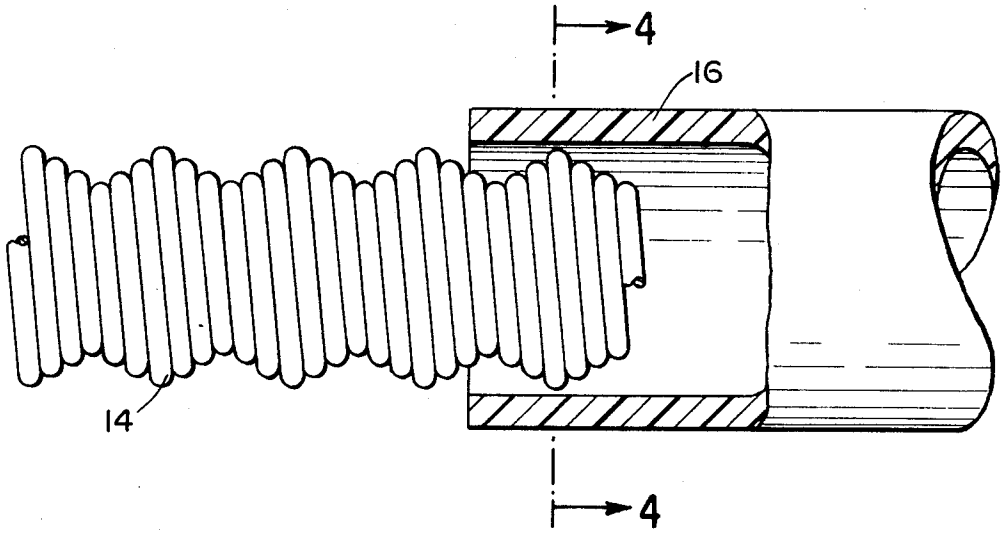

FIG. 2

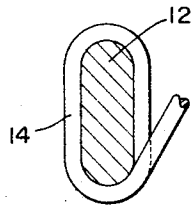

FIG. 1

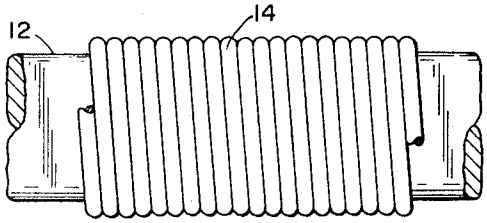

FIG. 3

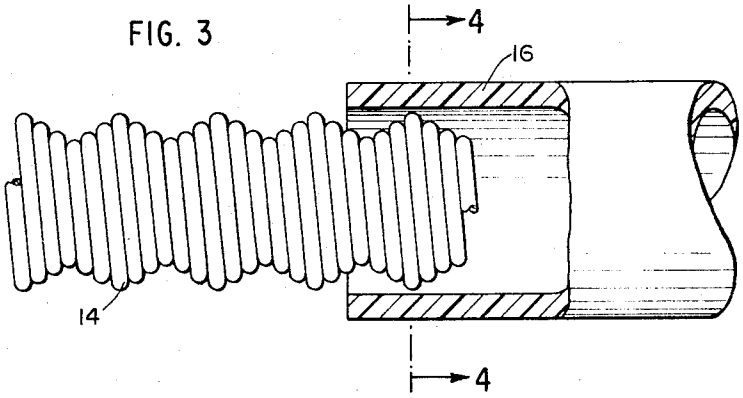

FIG. 4

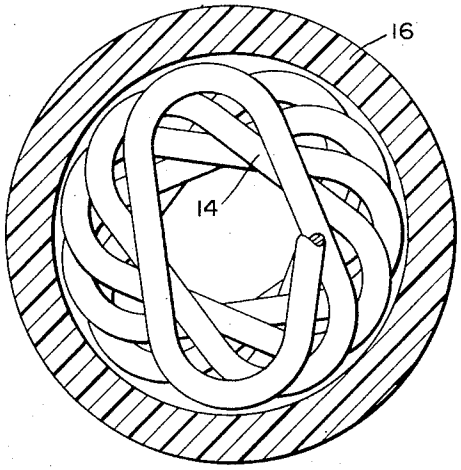

INVENTOR
NELSON H. MAGEOCH

LOW-FRICTION CATHETER GUIDE

BACKGROUND OF THE INVENTION

Catheterization of human beings or animals has become relatively common in certain diagnostic techniques such as angiography. These techniques involve the insertion of a catheter into the vascular system and it was early learned that ease of insertion and greater control of direction is possible if a flexible guide is first inserted. The catheter itself may then be passed over the guide. However, friction between the lumen of the catheter and the guide is unavoidable and the greater the length of insertion, the greater the friction becomes. Several obvious steps have been taken to reduce the friction such as coating the guide with plastic materials. A commonly used friction-reducing material is the well-known fluorocarbon Teflon.

Further to reduce friction and to provide greater flexibility and control, it has been the practice to employ a fine wire wound in a tightly coiled helix rather than a simple relatively large solid wire as the guide. Obviously, such a helix not only is more flexible than a solid wire but also has less areal contact with the lumen of the enclosing catheter.

Helical catheter guides are formed in a conventional manner, generally by winding a wire upon a circular mandrel or by utilizing a coil-forming machine which forms a helical coil without need of a mandrel. Conventionally, a guide generally also includes a central axial wire and a smooth end tip to which both the wire and coil are connected.

GENERAL DESCRIPTION OF THE INVENTION

The present invention has as its major object further reduction of the friction between a catheter lumen and the flexible guide over which it is designed to pass. That object is preferably obtained by utilizing a non-circular mandrel. If, for example, a flattened or oval mandrel is utilized, a flattened or oval coil can be wound. When the mandrel is removed from such a coil, springback occurs and the coil unwinds to some degree. The resulting guide coil becomes one in which adjacent turns of the coil are rotationally displaced relative to each other. Stated otherwise, the major axis of the ellipse formed by each turn of the coil is rotated slightly from that of its adjacent turn. Thus, when a catheter is passed over the guide, contact between the lumen of the catheter and the guide itself occurs only at a series of relatively widely spaced points. Friction between the guide and the lumen is radically decreased as the catheter is moved with respect to the guide.

For a better understanding of the present invention, together with other and further features thereof, reference should be made to the following detailed description of a preferred embodiment of the invention as shown in the drawing in which:

FIG. 1 is an elevation, partly in section, and partly cut away showing a guide in the process of being wound upon a non-circular mandrel.

FIG. 2 is a cross-section of the guide and mandrel shown in FIG. 1.

FIG. 3 is an elevation, partly in section, illustrating the passage of a catheter over a guide from which the mandrel has been withdrawn, and

FIG. 4 is a cross-section taken along the lines 4—4 of FIG. 3.

DESCRIPTION OF THE PREFERRED EMBODIMENT

As noted above, achievement of the purposes of the invention is facilitated by utilizing a non-circular mandrel upon which a wire is tightly wound. In FIG. 1, a mandrel 12 in the form of a flattened or oval wire is illustrated. Tightly wound upon the mandrel 12 is a coil 14 composed preferably of stainless steel wire of much smaller diameter than that of the mandrel. Relative sizes and shapes may be better appreciated and understood by reference to FIG. 2.

In the fabrication of a practical guide, of course, many feet of wire 14 are wound upon the mandrel 12 after which the mandrel is withdrawn from the formed coil, the coil itself being several feet or more in length. In the winding process, a slight amount of tension is imparted to the wire 14 and, upon withdrawal of the mandrel, springback occurs. This springback causes a slight unwinding of the coil to take place and adjacent turns or convolutions of the coil rotate slightly with respect to each other. With the type of oval or elliptical mandrel here under consideration, the coil which results is one in which the major axis of the ellipse formed by each convolution is rotated slightly from its neighboring turn.

In FIGS. 3 and 4, the coil of wire 14 may be seen in plan and section in relation to a catheter 16. Rather than the continuous peripheral contact that would exist between a conventional helical coil and the lumen of the catheter, contact is reduced to a series of points and these points are relatively widely spaced from one another along the length of the catheter as well as around its internal surface.

Although the preferred construction of the catheter guide is as described and shown, other embodiments of the invention are also feasable, the basic concept being the reduction of contact between lumen and guide to a series of points. Also, mandrels of cross-section other than oval may also be used, of course. For example, a triangular mandrel might well be used and, again, contact between catheter wall and guide would be considerably reduced as compared to that where a straight helix is utilized. Basically, a guide of non-circular cross-section is contemplated and the presently preferred embodiment involves the use of an oval guide in which adjacent turns are rotated relative to each other.

I claim

1. A low-friction catheter guide comprising a length of wire formed into a coil of non-circular cross-section the successive convolutions of which are axially disoriented from its adjacent convolution.

2. A low-friction catheter guide as defined in claim 1 wherein said coil is formed of a plurality of turns, each of said turns being of similar non-circular configuration, and being progressively axially rotationally displaced relative to its adjacent turns.

3. A low-friction catheter guide as defined in claim 1 wherein said coil comprises turns of wire of generally oval cross-section.

4. A low-friction catheter guide as defined in claim 3 wherein adjacent ones of said turns of oval cross-section are rotationally displaced relative to each other.

5. In combination with a catheter having a lumen, a catheter guide over which said catheter may be passed, said guide being formed with a successive series of longitudinally spaced radially offset protuberances, said

lumen being in contact only with said spaced protuberances.

6. In a combination as defined in claim **5**, a catheter guide comprising a length of wire formed into a coil of non-circular cross-section, said protuberances comprising the radial extremities of said coil.

7. In a combination as defined in claim **6**, a catheter guide in which each turn of said coil has a generally oval cross-section, adjacent turns being rotationally displaced from one another.

* * * * *