COMMONWEALTH OF AUSTRALIA

PATENTS ACT 1952

APPLICATION FOR A STANDARD PATENT

MCG Closures Limited, of Bromford Lane, West Bromwich, West Midlands, B70 7HY, UNITED KINGDOM, hereby apply for the grant of a standard patent for an invention entitled:

Closures for Containers

which is described in the accompanying complete specification.

Details of basic application(s):-

Basic Applic. No:	Country:	Application Date:
8916099.8	GB	13 July 1989

The address for service is:-

Spruson & Ferguson
Patent Attorneys
Level 33 St Martins Tower
31 Market Street
Sydney New South Wales Australia

DATED this TWELFTH day of JULY 1990

MCG Closures Limited

By: J. Ferguson.

Registered Patent Attorney

TO: THE COMMISSIONER OF PATENTS
OUR REF: 136265
S&F CODE: 62440

SO16013 12/07/90

5845/4

N & FERGUSON

AUSTRALIA
CONVENTION
STANDARD
& PETTY PATENT
DECLARATION

COMMONWEALTH OF AUSTRALIA
THE PATENTS ACT 1952
DECLARATION IN SUPPORT OF A CONVENTION APPLICATION FOR A PATENT

In support of the Convention Application made for a patent for an invention entitled:

Title of Invention: Closures for Containers

Full name(s) and address(es) of Declarant(s)

I/~~We~~ Michael Joseph Mann

of 14 Horton Close, The Heathlands, Sedgley, West Midlands, England.

do solemnly and sincerely declare as follows:-

Full name(s) of Applicant(s)

~~1. I/We are the applicant(s) for the patent~~

(or, in the case of an application by a body corporate)

1. I am/~~We are~~ authorised by

MCG CLOSURES LIMITED

the applicant(~~s~~) for the patent to make this declaration on ~~its~~/their behalf.

2. The basic application(~~s~~) as defined by Section 141 of the Act was/~~were~~ made

Basic Country(ies): in GREAT BRITAIN

Priority Date(s): on 13 July 1989

Basic Applicant(s): by MCG CLOSURES LIMITED

Full name(s) and address(es) of inventor(s)

3. ~~I am/We are the actual inventor(s) of the invention referred to in the basic application~~(s)

(or where a person other than the inventor is the applicant)

3. Nigel THOMPSON

of 45 Lea Vale Road, Norton, Stourbridge, West Midlands, England

(respectively)

is/~~are~~ the actual inventor(~~s~~) of the invention and the facts upon which the applicant(s) ~~is~~/~~are~~ entitled to make the application are as follows: is

Set out how Applicant(s) derive title from actual inventor(s) e.g. The Applicant(s) is/are the assignee(s) of the invention from the inventor(s)

The said applicant is the assignee of the actual inventor.

4. The basic application(~~s~~) referred to in paragraph 2 of this Declaration ~~was/were~~ the first application(~~s~~) made in a Convention country in respect of the invention(~~s~~) the subject of the application.

Declared at West Bromwich this 16 day of July 1990

.....
Signature of Declarant(s)

SFP4 To: The Commissioner of Patents

1/81

AU9058969

(12) PATENT ABRIDGMENT (11) Document No. AU-B-58969/90
(19) AUSTRALIAN PATENT OFFICE (10) Acceptance No. 633939

(54) Title
CLOSURES FOR CONTAINERS

(51)[5] International Patent Classification(s)
B65D 041/34

(21) Application No. : **58969/90** (22) Application Date : **12.07.90**

(30) Priority Data

(31) Number	(32) Date	(33) Country
8916099	**13.07.89**	**GB UNITED KINGDOM**

(43) Publication Date : **17.01.91**

(44) Publication Date of Accepted Application : **11.02.93**

(71) Applicant(s)
MCG CLOSURES LIMITED

(72) Inventor(s)
NIGEL THOMPSON

(74) Attorney or Agent
SPRUSON & FERGUSON , GPO Box 3898, SYDNEY NSW 2001

(56) Prior Art Documents
US 4147268
US 4753360
AU 612400 21712/88 B65D 55/06 B29D 1/00

(57) Claim

1. A container closure moulded from plastics material and comprising a top, an annular skirt depending from the top and formed with a screw-thread on its internal surface, and a tamper-evident ring connected to the end of the skirt remote from the top by a series of frangible bridges extending across an axial gap between the ring and the skirt or by a band of the material with a circumferential line of weakening therein, said ring having spaced along its inner surface a plurality of radially inwardly projecting protrusions each having an end abutment surface generally facing towards the top but having a slight inclination away from the top in a radially inward direction and an inwardly facing cam surface inclined outward in a direction away from the top, the protrusions being so disposed about the central axis of the closure that no two of the protrusions are diametrically opposite each other.

633939

S & F Ref: 136265

FORM 10

COMMONWEALTH OF AUSTRALIA

PATENTS ACT 1952

COMPLETE SPECIFICATION

(ORIGINAL)

FOR OFFICE USE:

Class Int Class

Complete Specification Lodged:
Accepted:
Published:

Priority:

Related Art:

Name and Address of Applicant: MCG Closures Limited
Bromford Lane
West Bromwich West Midlands B70 7HY
UNITED KINGDOM

Address for Service: Spruson & Ferguson, Patent Attorneys
Level 33 St Martins Tower, 31 Market Street
Sydney, New South Wales, 2000, Australia

Complete Specification for the invention entitled:

Closures for Containers

The following statement is a full description of this invention, including the best method of performing it known to me/us

5845/5

ABSTRACT

A container closure moulded from plastics material has a top 10, an internally screw-threaded skirt 11, and a tamper-evident ring 13 connected to the bottom edge of the skirt by frangible bridges 15. The radially inner surface of the ring 13 is formed with an odd number of evenly spaced inwardly projecting protrusions 16 for engaging under a security band on the neck of a container. The use of an odd number of protrusions ensures that no two protrusions are diametrically opposite each other and in consequence permits the closure to shift or wriggle diametrally during application of the closure to a container and thus facilitates movement of the ring 13 past the security band. An annular groove 20 is formed on the radially-outer surface of the ring at a location axially between the upper ends of the protrusions 16 and the bridges 15, and serves to form an annular hinge about which the lower parts of the ring 13 can pivot during application of the closure.

CLOSURES FOR CONTAINERS

This invention relates to closures for containers and the manufacture thereof.

According to this invention there is provided a container closure moulded from plastics material and comprising a top, an annular skirt depending from the top and formed with a screw-thread on its internal surface, and a tamper-evident ring connected to the end of the skirt remote from the top by a series of frangible bridges extending across an axial gap between the ring and the skirt or by a band of the material with a circumferential line of weakening therein, said ring having spaced along its inner surface a plurality of radially inwardly projecting protrusions each having an end abutment surface generally facing towards the top but having a slight inclination away from the top in a radially inward direction and an inwardly facing cam surface inclined outward in a direction away from the top, the protrusions being so disposed about the central axis of the closure that no two of the protrusions are diametrically opposite each other.

In preferred constructions according to the invention, the protrusions are uniformly disposed about the ring and are provided in an odd number.

In preferred arrangements according to the invention, the ring has an annular groove formed in one of its radially facing surfaces at a location axially between the protrusions and the bridges or the line of weakening. The groove may be formed on the radially inner surface of the ring but is preferably in the radially outer surface of the ring.

The invention will now be described in more detail with reference by way of example to the accompanying diagrammatic drawings in which:

AUSTRALIAN PATENT OFFICE

Figure 1 is an elevation, partly in axial section, of a closure according to the invention,

Figure 2 is an underneath plan in the direction of the arrow 2 of Figure 1,

Figure 3 is a part sectional plan view on the line 3-3 of Figure 1,

Figure 4 is a view corresponding to Figure 2 illustrating how the tamper-evident ring becomes deformed during application of the closure,

Figures 5 to 8 illustrate closures according to the invention and incorporating optional minor modifications, and

Figures 9 and 10 are respectively fragmentary front and side views of an alternative form of protrusion.

Referring first to Figures 1 to 3, the closure shown is moulded from a resilient plastics material and comprises a top 10, an annular skirt 11 depending from the top and formed with a screw-thread 12 on its inner surface, and a tamper-evident ring 13 spaced from the bottom edge of the skirt by an axial gap 14 across which extend frangible bridges 15 moulded integrally with the skirt 11 and ring 13.

The inner surface of the ring 13 has formed on it an odd number of circumferentially-spaced protrusions 16, each having an abutment end surface 17 nearer the top inclined at a small angle of up to 15° away from the top in a radially inward direction and having a cam surface 18 conically inclined outward away from the central axis 19 of the closure. The protrusions, which are shown in their unstressed positions in chain lines in Figure 1, are axially spaced from the gap 14. An arcuate-section groove 22 is formed in the outer surface of the ring at a location axially between the gap 14 and the end surfaces 17 of the protrusions. Above the

upper edge of the groove 22, in the regions circumferentially between the bridges 15, the outer surface of the ring is inclined inward at an angle θ as shown at 23 in Figure 1, reducing the thickness of the ring 13 in the region adjoining the gap 14.

The bridges 15 are equi-distantly spaced from each other but the number and locations of the bridges and protrusions are independent of each other.

The end surfaces 17 of some of the protrusions 16 may be differently spaced from the bottom edge of the ring 13 to others of the protrusions.

When the closure is applied to a screw-threaded container having an annular security band formed with a shoulder at its lower end in the well-known manner, the inclined cam surfaces 18 of the protrusions come into engagement with the security band and are splayed outward by the security band causing the ring 13 to stretch and distort locally tending to flatten the curvature of the ring between adjacent protrusions as shown in Figure 4 and in full lines in Figure 1, and hinge outward, assisted by the weakening effect of the annular groove 22 on the wall of the ring, until the closure is fully engaged and the protrusions pass beyond the shoulder permitting the ring to contract resiliently. Reference numeral 21 indicates the outside diameter of the neck of the container. Since the protrusions are provided in an odd number, seven in this instance, there is diametrically opposite the middle of each protrusion a gap between two protrusions, and since, as will be seen, each gap is wider than the protrusion opposite, no part of any protrusion is diametrically opposite any part of any other of the protrusions. This reduces the amount by which the ring is required to expand during application of the closure and also permits the ring to wriggle or shift about diametrally to a small extent as it moves over the shoulder during application.

AUSTRALIAN PATENT OFFICE

When the closure is unscrewed the end surfaces 17 of the protrusions 16 come into abutment with the shoulder on the container resisting further upward movement of the ring 13 and causing the bridges to be fractured. The removal of the closure can then be completed. Thus, fracture of the bridges is evidence that the closure has been removed. Where the end faces 17 of the protrusions are at different distances from the bottom edge of the ring 13 as described above, the frangible bridges are subjected to breaking stresses at different times which are related to the times at which the protrusions adjacent a bridge come into abutment with the shoulder on the container during unscrewing of the closure from the container.

The provision of the annular groove 22 in the outer surface of the ring between the gap 14 (or a line of weakening provided for the same purpose) and the protrusions 18 are particularly advantageous in relation to stripping of the moulded closure from the mould during manufacture, the sequence of operations in which is described and illustrated in our Australian Patent Application No. 21712/88.

A plurality of ribs 25 may be provided bridging the groove 22 as shown in Figure 5 to prevent the radially inner tip 26a of the mould part 26 which shapes the bridges from entering the groove 22 during stripping of the closure from the mould.

In one construction described and illustrated in our above-mentioned application, groove 22 is replaced by a corresponding groove 27 on the radially inner surface of the ring, and in such a construction the mould part which forms the bridges may be shaped to impress or emboss the radially outer surface of the ring 13 at a location above the level of the internal groove

27 as shown in Figures 6 and 7 respectively. The primary purpose of the impressed or embossed markings is to provide interengaging reaction surfaces on the mould part and the ring which protect the bridges during axial stripping of the core from out of the moulded closure during manufacture. A similar function is performed in the internally-grooved arrangement of Figure 8 by providing, on the mould part 26 which forms the bridges, a reverse taper on the portion 29 of its inner surface just below the bridges. In the arrangements of Figures 6 and 7 the impressed or embossed matter may comprise pictorial and/or descriptive matter and can thus perform a very useful secondary function.

The form of the protrusions 16 shown in Figures 1 to 8 is merely one of numerous possible forms. One alternative form of each protrusion is shown in Figures 9 and 10 and comprises a peripherally extending rib 28 of generally triangular section so as to present upper and lower faces 29,30 which are respectively inclined upward and downward, and a wedge shaped part 31 disposed centrally of the rib and presenting an inwardly facing cam surface 32 which is inclined downwardly. On applying the closure the wedge-shaped parts engage the security band on the neck of the container and cause the part of the ring below the groove 22 to hinge outward to enable the protrusions to pass over the security band. When the closure is removed, the upper surfaces of the ribs abut the underside of the band and their resistance to further upward movement as the closure is unscrewed causes the bridges to fracture.

Figure 8 also shows how the internal diameter 30 of the ring 13 in the spaces between the protrusions below the top surfaces of the protrusions can be regulated so as to determine the thickness of the ring at positions in its axial length and thus to achieve optimum strength in the ring to facilitate stripping of the core from the moulded closure and application of the closure to a container without breaking the ring.

The claims defining the invention are as follows:

1. A container closure moulded from plastics material and comprising a top, an annular skirt depending from the top and formed with a screw-thread on its internal surface, and a tamper-evident ring connected to the end of the skirt remote from the top by a series of frangible bridges extending across an axial gap between the ring and the skirt or by a band of the material with a circumferential line of weakening therein, said ring having spaced along its inner surface a plurality of radially inwardly projecting protrusions each having an end abutment surface generally facing towards the top but having a slight inclination away from the top in a radially inward direction and an inwardly facing cam surface inclined outward in a direction away from the top, the protrusions being so disposed about the central axis of the closure that no two of the protrusions are diametrically opposite each other.

2. A closure as claimed in claim 1, wherein the protrusions are uniformly disposed about the ring and are provided in an odd number.

3. A closure as claimed in claim 1 or claim 2, wherein the ring has an annular groove formed in one of its radially facing surfaces at a location axially between the protrusions and the bridges or the line of weakening.

4. A closure as claimed in claim 3, wherein the groove is formed in the radially inner surface of the ring.

5. A closure as claimed in claim 4, wherein impressed or embossed features are formed on the radially outer surface of the tamper-evident ring at a location axially between the bridges and said groove.

6. A closure as claimed in claim 5, wherein said features comprise pictorial and/or descriptive matter.

AUSTRALIAN PATENT OFFICE

7. A closure as claimed in claim 4, wherein a radially outwardly inclined shoulder is formed on the radially outer surface of the tamper-evident ring at a location axially between the bridges and said groove.

8. A container closure substantially as hereinbefore described with reference to the accompanying drawings.

DATED this SECOND day of DECEMBER 1992

MCG Closures Limited

Patent Attorneys for the Applicant
SPRUSON & FERGUSON

AUSTRALIAN PATENT OFFICE
STAMP 02711

58969/90

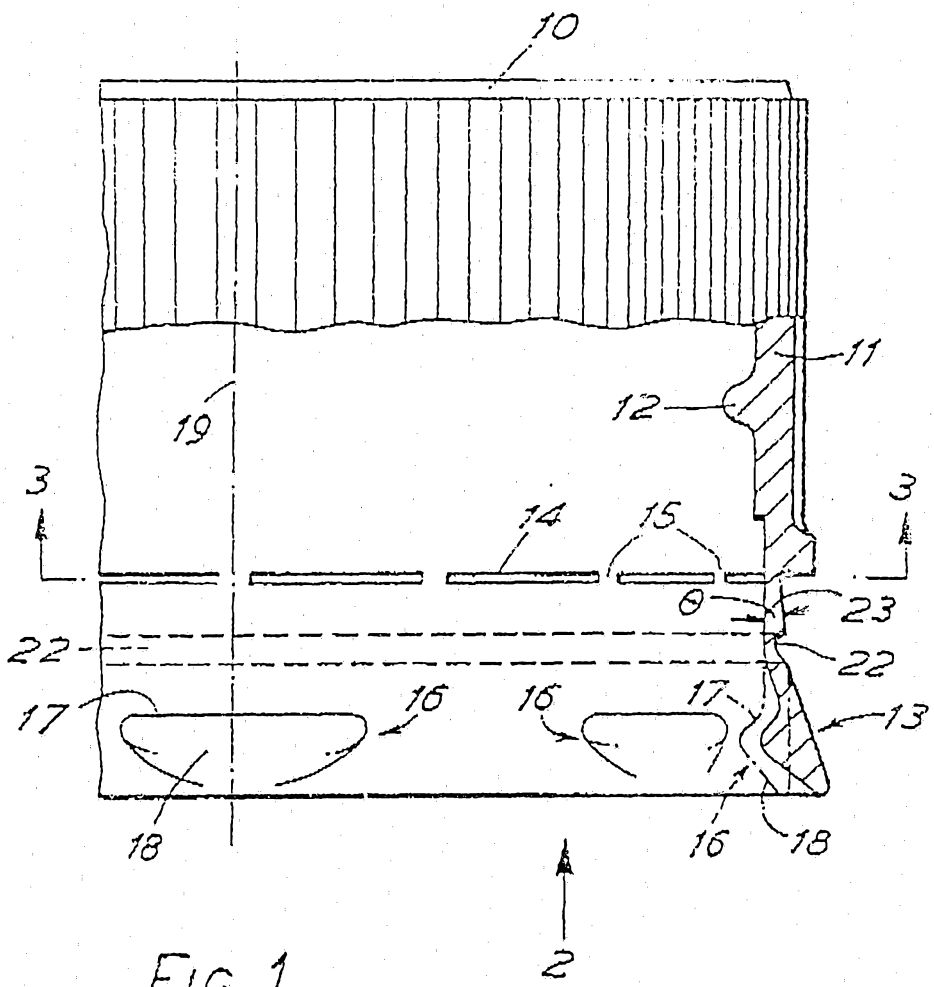

FIG. 1

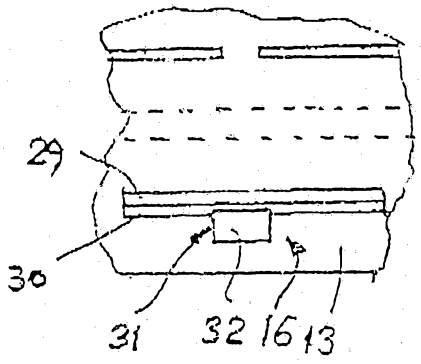

FIG. 9

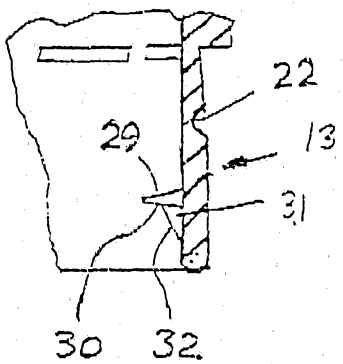

FIG. 10

58969/90

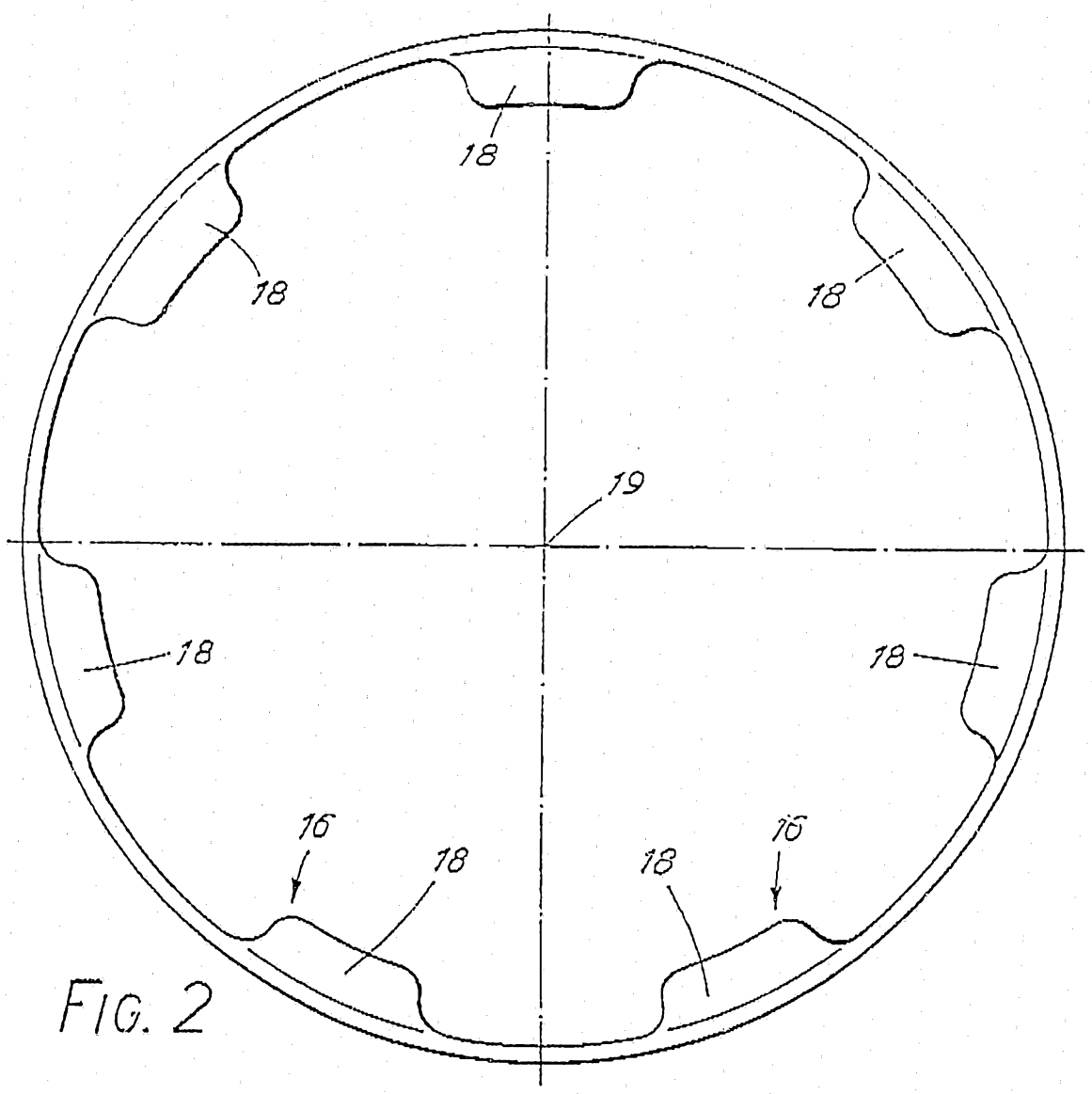

FIG. 2

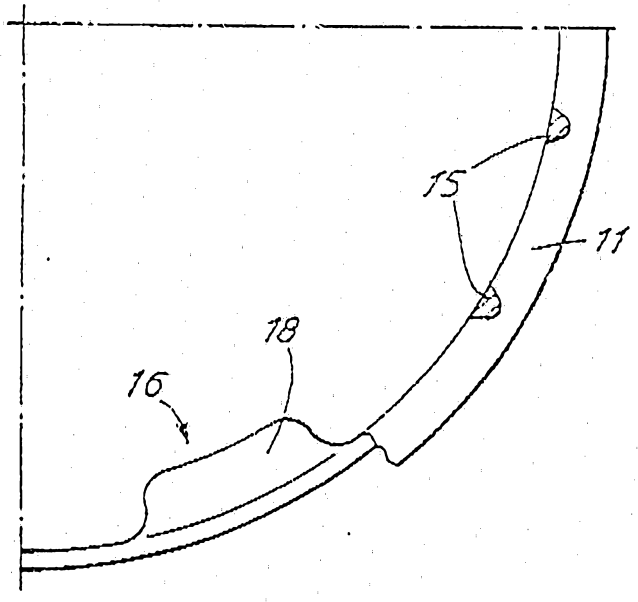

FIG. 3

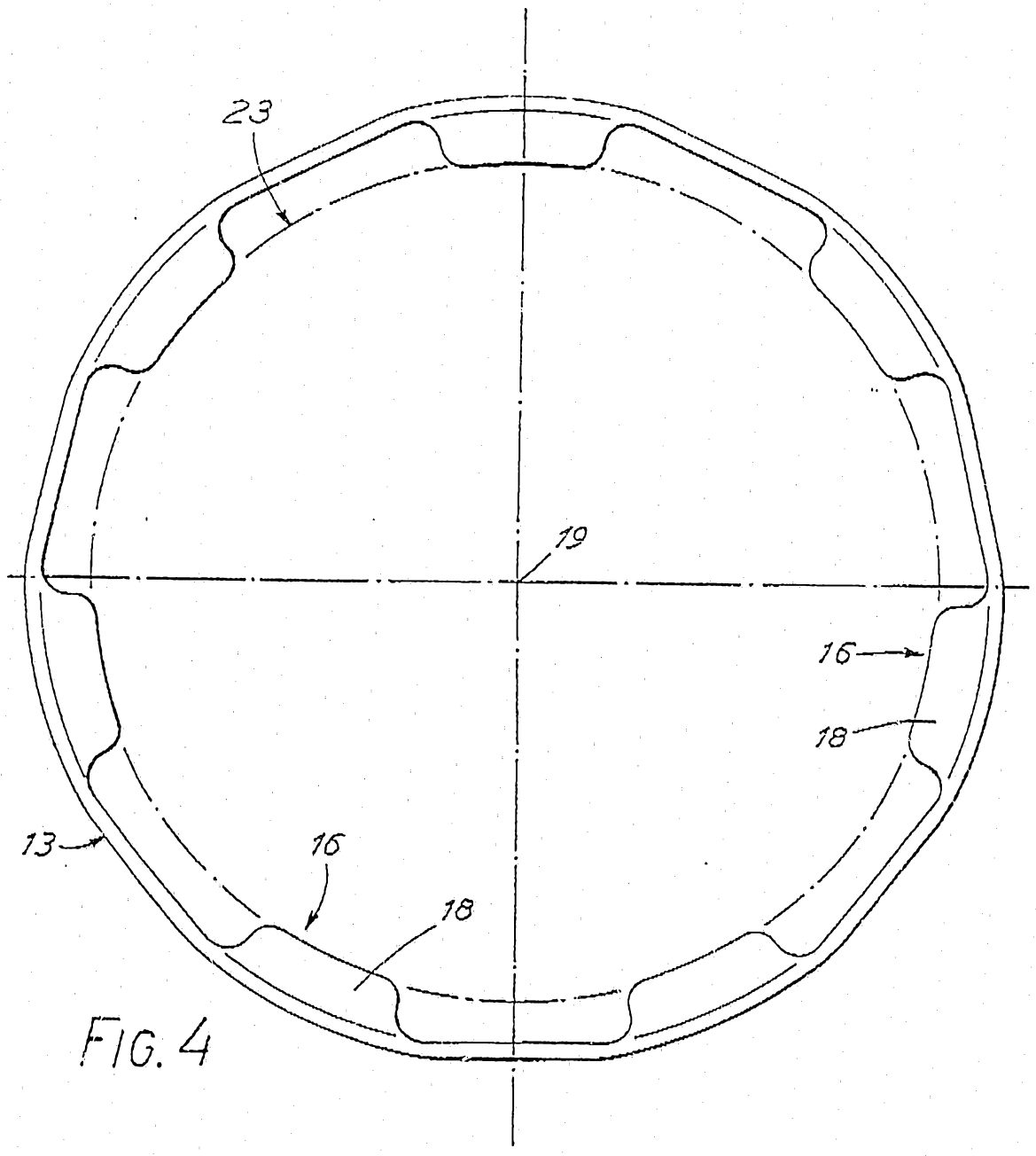

FIG. 4

FIG. 5

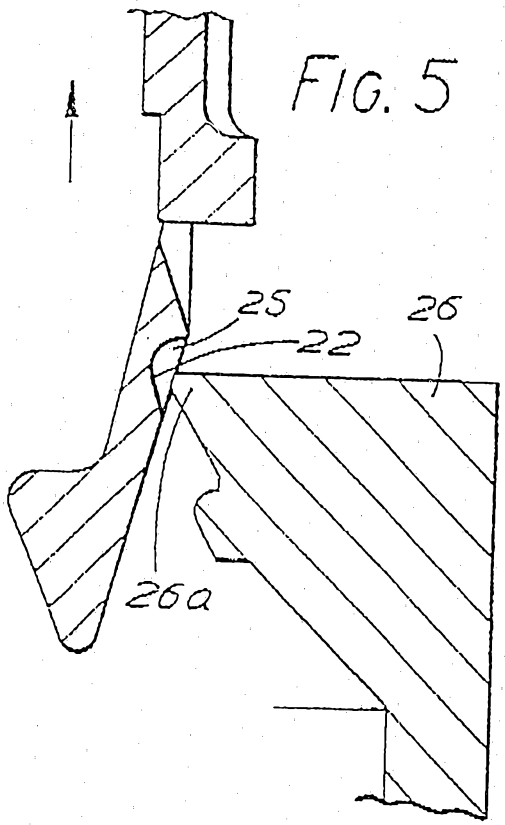

FIG. 8

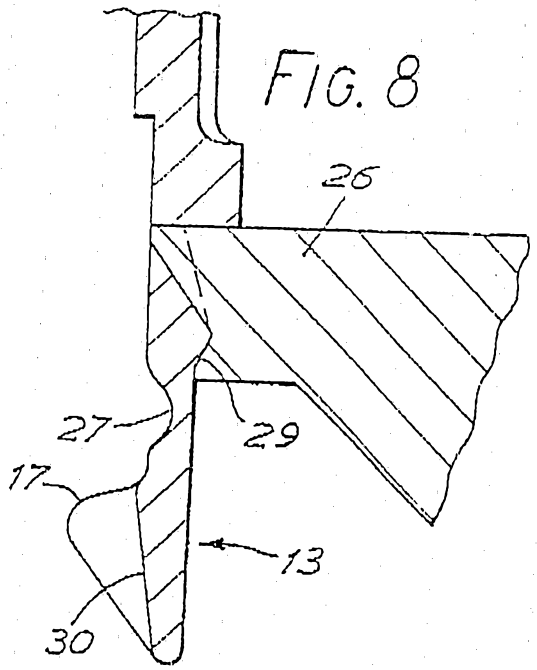

FIG. 6

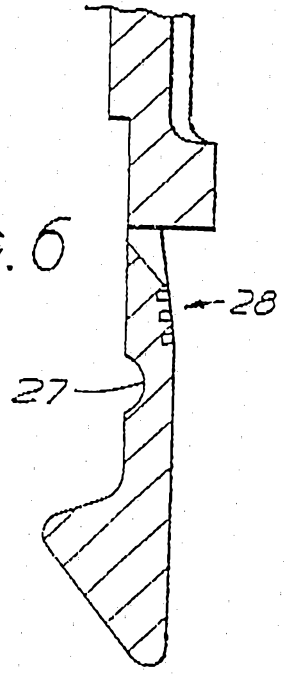

FIG. 7

