2 Sheets--Sheet 1.

W. HORSFALL.
Nut-Machine.

No. 160,194. Patented Feb. 23, 1875.

Fig. 1.

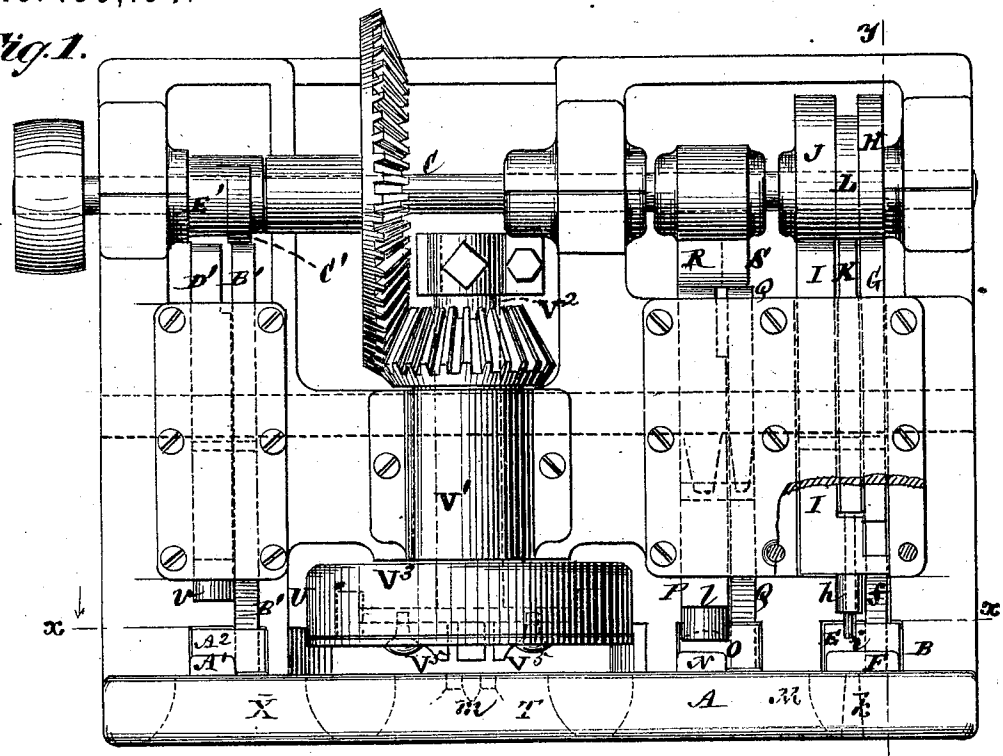

Fig. 2.

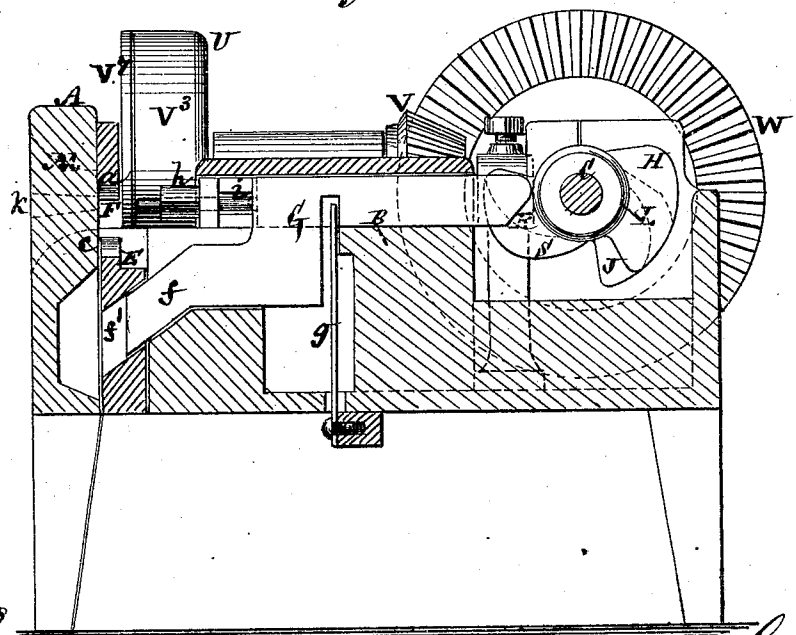

Witnesses
John Becker
Fred. Haynes

Wm Horsfall
by his Attorneys
Brown & Ellis

THE GRAPHIC CO. PHOTO-LITH. 39 & 41 PARK PLACE, N.Y.

2 Sheets--Sheet 2.

W. HORSFALL.
Nut-Machine.

No. 160,194. Patented Feb. 23, 1875.

Fig. 3.

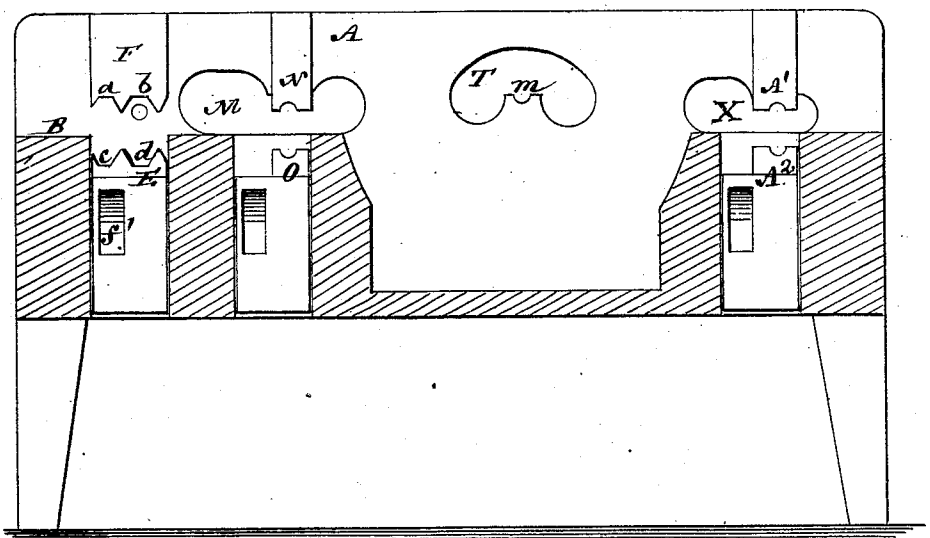

Fig. 4.

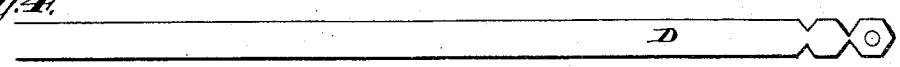

Fig. 5.

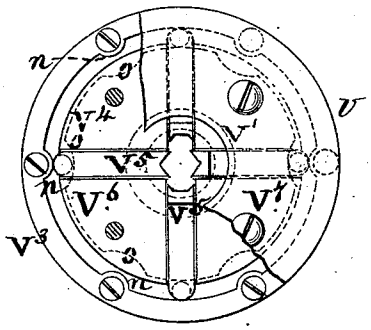

Fig. 6.

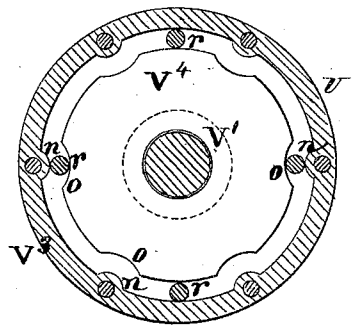

Fig. 7.

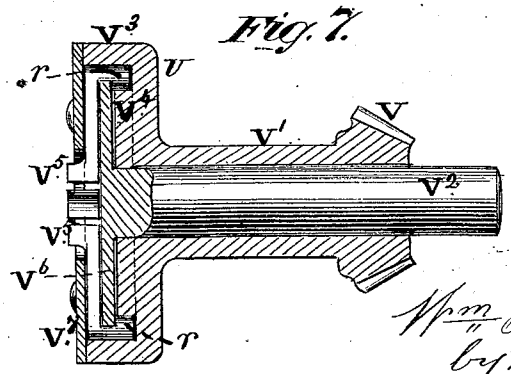

Witnesses
John Becker
Fred. Haynes

Wm. Horsfall
by his Attorneys
Prout & Allen

THE GRAPHIC CO. PHOTO-LITH. 39 & 41 PARK PLACE, N.Y.

UNITED STATES PATENT OFFICE.

WILLIAM HORSFALL, OF ARMLEY, LEEDS, ENGLAND.

IMPROVEMENT IN NUT-MACHINES.

Specification forming part of Letters Patent No. **160,194**, dated February 23, 1875; application filed October 2, 1874.

To all whom it may concern:

Be it known that I, WILLIAM HORSFALL, formerly of Sing Sing, in the county of Westchester and State of New York, but now residing at Armley, Leeds, in Yorkshire, England, have invented certain Improvements in Nut-Machines, of which the following is a specification:

This invention relates to machines for making nuts; and consists of a novel combination of parts, to be hereinafter described.

Figure 1 represents a plan of the machine. Fig. 2 is a vertical transverse section mainly on the line *y y*. Fig. 3 is a longitudinal vertical section on the line *x x* looking from the back toward the front. Fig. 4 is a longitudinal face view of a bar in the course of its being worked into nuts. Fig. 5 is a broken face view of the radial hammer or revolving swaging device; Fig. 6, a section of the same, taken transversely to the axis; and Fig. 7, a section thereof in a longitudinal direction with the axis.

A is an elevated front, and B the table or upper surface, of the machine. C is a horizontal main driving-shaft, arranged in rear of the machine and parallel with the elevated front A. The heated bar D to be worked into nuts is first introduced over the one end of the table B, immediately in rear of the elevated front A, to the forming and fullering dies E F. The upper one, F, of these dies is stationary, and is double or consists of separate formers *a b*, and the lower die, E, which is movable, also of separate formers or dies proper *c d*. The general function of the die F is to hold the nut while the hole in it is being punched before it is separated from the bar, or rather the formers *b d* thus hold it, the other formers *a c* of the dies E F acting as gages and preliminary dies to prepare and shape the iron for each succeeding embryo nut as it is formed on the bar during the feed of the latter between the dies E F, the bar, as shown in Fig. 4, being worked up into attached nuts, one in advance of the other, while passing between the dies E F. The die E is moved up and down at intervals by means of a cross-slide, G, operated by a cam, H, on the shaft C, and formed with a dip or bevel nosed projection, *f*, which, as the slide is moved forward by its cam, lifts the die E by its action within a slot, *f'*, and as said slide is returned insures the dropping of the die. A spring, *g*, serves to throw the slide G back. I is a slide, which receives its forward motion from a cam, J, on the shaft C, and, as with the slide G and other slides hereinafter referred to deriving their motion from cams on said shaft, is returned by the action of a spring. This slide I carries at its front a tool, *h*, for pressing the forward nut-blank on the end of the bar D into the die F or formers *b d* of the dies E F when the latter are closed. A punch, *i*, which is attached to a slide, K, operated by a cam, L, on the shaft C, and which passes through a crook on the forward end of the slide I and through its tool *h*, then comes forward and punches the hole in the nut-blank, the punchings passing out through a die, *k*, in the front plate A. After this the die E drops or opens, and the punch *i*, with its slide K, retires, followed by the tool *h* of the slide I. The bar D is then pushed forward to repeat the operation of gaging and forming the nut-blanks, and in so doing brings the forward punched nut still attached, but only lightly so, to the bar, in line with an opening, M, in the front A, when a hand-mandrel is inserted through the hole in said nut, and the latter broken off from the bar D. This hand-mandrel is a plain round-pointed rod, and serves to carry each punched nut in succession through the succeeding operations in the machine. The nut, while thus on the mandrel, is next placed, by the aid of the latter, within or against the inner side or face of a stationary die or grooved block, N, when a corresponding movable die or grooved block, O, comes up to hold the nut and mandrel in place, and to form a back for the nut, after which, and while the nut is so held or supported, a cupping-tool, *l*, attached to a slide, P, comes forward to cup the front edges of the nut. The die O receives its motion from a crooked or bevel nosed slide, Q, in like manner with the die E, actuated by a cam, S, on the shaft C, while the slide P receives its forward motion from a cam, R, on said shaft. The mandrel having the nut on it is then passed through an opening, T, in the front A, and within or through a guide, *m*, to feed or pass the nut into a rotary swag-

ing device, U, for the purpose of solidifying by a hammering process, and of equalizing the sides of the nut. This rotary swaging device is driven by bevel-gears V W from the main shaft C, the bevel wheel or pinion V being fast to a sleeve, V^1, which revolves freely round a fixed stud or shaft, V^2, and said sleeve carrying at its forward end a cylinder, V^3, which, together with a disk, V^4, arranged within the cylinder, revolve in common with the sleeve. The inner periphery of the cylinder has any desired number of projections *n* on it, and the periphery of the disk V^4 a corresponding number of depressions O, for the purpose of giving to a series of radially sliding hammers, V^5, a succession of quick strokes or blows on the sides of the nut, as the latter is introduced by the mandrel between said hammers, shanks, or studs *r* on the outer ends of the hammers, fitting in between the cylinder V^3 and disk V^4, to secure such action of the hammers as the projections *n* in the cylinder and the notches or depressions *o* in the disk pass the studs *r*. The hammers have their reciprocating or sliding motion within radial grooves in a stationary disk, V^6, fast on the stud V^2, and which has connected with it, by screws, a stationary face-plate or cover, V^7, to the cylinder V^3. After the nut has been thus hammered, it is entered, with the mandrel, through an opening, X, in the front A and within dies A^2 A^2, the upper one A^1 of which is stationary, while the lower one A^2 rises and falls at the requisite intervals, by means of a bevel-nosed slide, B′, operated by a cam, C′, on the shaft C. While the nut is thus held or supported by said dies it receives a blow from a facing-tool, *v*, for the purpose of smoothing or flattening it, and of driving out the mandrel, which provides for the attendant cooling the mandrel after each nut is completed. The tool *v* is carried by a slide, D′, operated by a cam, E′, on the shaft C.

The arrangement of the several nut forming, punching, and hammering devices in relation with each other and with the front plate A, affords the greatest facility for manipulation of the nut from the front side of the machine.

Some of the devices or combinations here described, especially the cupping and rotary swaging devices, may be used to advantage in machines for heading bolts.

I claim—

The stationary die F and the movable die E, each constructed with the separate formers or dies *a b* and *c d*, in combination with the reciprocating slide K, having the punch *i*, and the slide I having the tool *h*, substantially as and for the object specified.

WM. HORSFALL.

Witnesses:

MICHAEL RYAN,

FRED. HAYNES.