Aug. 15, 1933. R. M. BAKER ET AL 1,922,191

METHOD AND APPARATUS FOR REDUCING THE CONTACT DROP BETWEEN CURRENT CARRYING CONTENTS

Filed Dec. 1, 1931

Fig. 1.

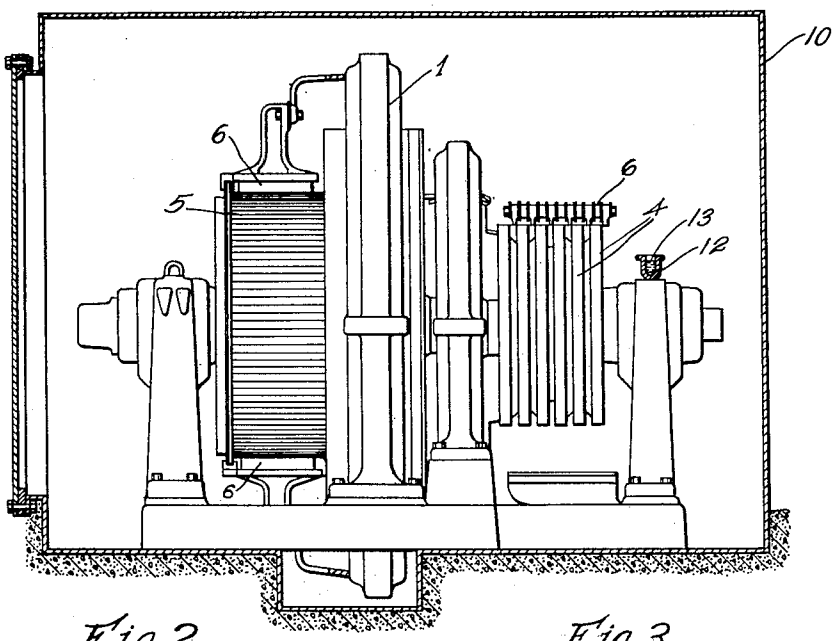

Fig. 2.

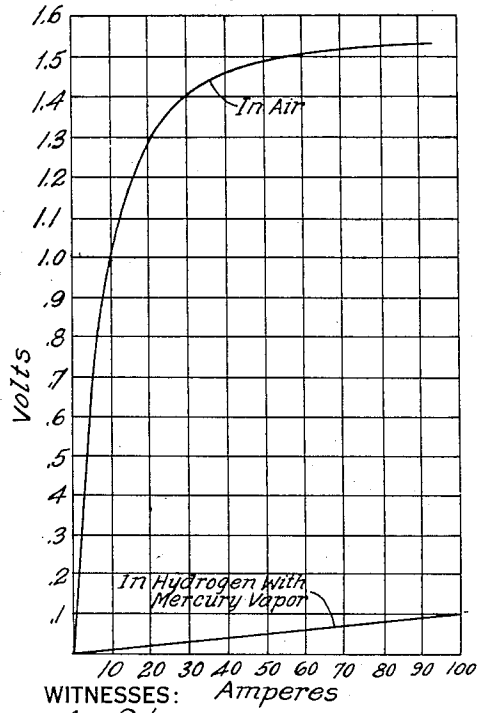

Fig. 3.

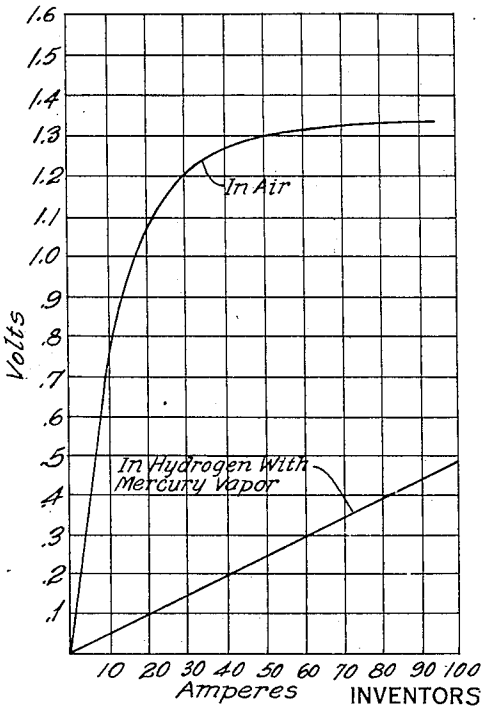

WITNESSES:

C. J. Weller.

Wm. C. Groome

INVENTORS.

Robert M. Baker &

Lloyd Smede.

BY O. B. Buchanan

ATTORNEY

Patented Aug. 15, 1933 1,922,191

UNITED STATES PATENT OFFICE

1,922,191

METHOD AND APPARATUS FOR REDUCING THE CONTACT DROP BETWEEN CURRENT-CARRYING CONTENTS

Robert M. Baker and Lloyd Smede, Wilkinsburg, Pa., assignors to Westinghouse Electric and Manufacturing Company, a Corporation of Pennsylvania

Application December 1, 1931. Serial No. 578,330

7 Claims. (Cl. 171—323)

Our invention relates to a method and apparatus for reducing the contact drop between current-carrying contents, and particularly, between the brush and current-carrying rings or commutator of a dynamo-electric machine.

In the operation of current-carrying elements such as composition brushes known as carbon brushes, and their cooperating commutators or slip rings, considerable loss is introduced by a voltage drop between the brush and the cooperating element. For many uses, such as relays, this voltage drop is a serious detriment to the sensitivity of the device. In other devices, such as dynamo-electric machines, the contact drop introduces serious heating in the current-carrying devices.

It is an object of our invention to provide a current-collecting device having a very low contact drop between the carbon current-carrying element and the cooperating metallic element. We have accomplished this result by providing an inert or non-oxidizing gaseous medium surrounding the current-collecting devices and introducing a small quantity of mercury vapor into the non-oxidizing gas. Experiments have shown that metals or metal alloys capable of amalgamating with mercury produce the lowest contact drop. While non-amalgamating metals have substantially the same contact drop as in air. However, such small quantities of mercury are necessary, that, after several months operation, no trace of amalgamation can be noted.

Other objects and advantages of our invention will be apparent from the following detailed description, taken in conjunction with the accompanying drawing, in which:

Figure 1 is a view, partly in section and partly in side elevation of a dynamo-electric machine, constructed according to our invention, and;

Fig. 2 is a volt-ampere characteristic curve for a brass ring both in air and in the inert medium according to our invention, and

Fig. 3 is a similar volt-ampere curve for a copper slip-ring.

The apparatus according to Fig. 1 comprises a dynamo-electric machine 1, such as a rotary converter, having both slip-rings 4 and a commutating cylinder 5, co-operating with suitable composition brushes 6 usually known as carbon brushes, the entire machine being enclosed in a suitable air-tight housing 10 in which is placed a suitable non-oxidizing cooling fluid, such as hydrogen or nitrogen. At a convenient point in the casing 10 we provide a receptacle 12 for containing liquid mercury 13. Preferably, this receptacle 12 should be placed on some portion of the machine, which, during normal operation, will have a temperature of 40° to 50°, as we have found that the vapor pressure of mercury at this temperature will provide sufficient mercury vapor to produce the desired low contact drop.

In the operation according to our invention, the active air about the machine, and particularly about the commutating elements, is replaced by a suitable inert gas which is in contact with the mercury in the receptacle. A small amount of the mercury will evaporate into the inert gas and probably will be deposited on the surface of the metallic current-carrying element. In any event, we have found that carbon brushes operating against suitable metallic elements have a contact drop much less than the same elements when operated in air.

Referring to Fig. 2, it will be noted that for substantial currents, the contact drop was greater than one volt when operated in air, but, when operated in hydrogen in the presence of mercury vapor, the maximum contact drop was less than .1 volt.

Also referring to Fig. 3, it is noted that while the contact drop for a copper ring in air was well above one volt throughout a wide current range, the maximum drop in hydrogen charged with mercury according to our invention was less than .5 of a volt. Attention is also directed to the fact that the volt-ampere characteristic of the contact drop in an inert gas is substantially a straight line function, in other words, substantially a pure resistance function, while the contact drop in air rapidly reaches a maximum and then flattens out in a manner totally different from a pure resistance function.

In normal high-current work, such as slip-rings and commutators, the elimination of the contact drop loss permits much higher current densities in the current-collecting device without overheating the same than would otherwise be possible.

It has long been known that dynamo-electric machines can be operated at a higher rating when cooled by hydrogen or other gas having a high thermal conductivity. However, in many machines, such as rotary converters, it has been impossible to take advantage of hydrogen cooling, because such machines use so-called metallized brushes in order to maintain a suitable low-contact drop between the brushes and slip-rings. These brushes, however, wore away rapidly and deposited finely divided particles adjacent to the slip-rings. Since it was necessary to frequently

clean the device, it was inadvisable to put a casing about the machine. However, with our invention, suitable low-contact drops may be maintained using so-called carbon brushes which are not subject to the "dusting" above referred to.

In certain applications where the "dusting" of metallized carbon brushes is not objectionable the contact drop of such brushes can be still further reduced by the application of our invention.

We have also found that the current collecting devices of relays and such like equipment may be made very sensitive by the use of our improved method of low voltage current transfer.

We have found that as little as two grams of mercury per thousand cubic feet of inert gas is quite adequate to secure the benefits of our invention while this amount of mercury is quite inadequate to injure the winding of the machine or be injurious to workmen or others about the machine.

While we have shown and described a specific embodiment of our invention, it is apparent that many changes and modifications can be made therein without departing from the spirit and scope of our invention. We desire, therefore, that only such limitations shall be imposed as are embodied in the accompanying claims or as may be necessitated by the prior art.

We claim as our invention:

1. A method of producing a low contact drop between a brass contact member and a carbon contact member which comprises maintaining an inert gas about the contact members and supplying a small quantity of mercury vapor to the contact members.

2. A current-collecting device comprising a rotating current-carrying ring, a carbon brush in contact with the ring, a casing enclosing the ring and the brush, an inert gas in the casing, and a pool of mercury enclosed in said casing and in contact with the gas in said casing.

3. A current collecting device comprising a metal current carrying element, the metal of said current-carrying element having an affinity for mercury, a second current-carrying member having sliding contact with the first mentioned member, a casing enclosing both of said members, a non-oxidizing gas in said casing about the current-carrying members and a small amount of mercury vapor in said casing.

4. A current collecting device comprising a brass current carrying element, a carton brush in contact therewith, a casing surrounding the device, an inert gas filling said casing and means for supplying mercury vapor in said inert gas.

5. A current-collecting device comprising a current-carrying ring, said ring being of a material capable of amalgamation with mercury, a current-carrying brush in contact with the ring, a casing surrounding the collecting device, a non-oxidizing gas in the casing and means for introducing mercury vapor into the gas.

6. A current-collecting device comprising a copper containing current-carrying element, a metalized carbon brush cooperating therewith, a casing enclosing the current collecting device, hydrogen in said casing and about the current-collecting device and means for supplying mercury vapor in the hydrogen.

7. A current-collecting device comprising a current-carrying element of a material capable of amalgamating with mercury, a metalized carbon brush in current-carrying relation to the element, a non-oxidizing gas surrounding the device and means for introducing mercury vapor into the gas.

ROBERT M. BAKER.
LLOYD SMEDE.