(12) INTERNATIONAL APPLICATION PUBLISHED UNDER THE PATENT COOPERATION TREATY (PCT)

(19) World Intellectual Property Organization
International Bureau

(43) International Publication Date
23 August 2001 (23.08.2001)

PCT

(10) International Publication Number
WO 01/62060 A1

(51) International Patent Classification[7]: H05K 7/20, F28F 7/00

(21) International Application Number: PCT/US01/04964

(22) International Filing Date: 16 February 2001 (16.02.2001)

(25) Filing Language: English

(26) Publication Language: English

(30) Priority Data:
60/183,328 18 February 2000 (18.02.2000) US

(71) Applicant: RTKL ASSOCIATES INC. [US/US]; Commerce Place, One South Street, Baltimore, MD 21202 (US).

(72) Inventors: SPINAZZOLA, R., Stephen; 5710 St. Albans Way, Baltimore, MD 21212 (US). PELTZ, Dennis, L.; 5028 Tartan Hill Road, Perry Hill, MD 21128 (US).

(74) Agents: HAMILTON, James, D. et al.; Oblon, Spivak, McClelland, Maier & Neustadt, P.C., 4th floor, 1755 Jefferson Davis Highway, Arlington, VA 22202 (US).

(81) Designated States *(national)*: AE, AG, AL, AM, AT, AU, AZ, BA, BB, BG, BR, BY, BZ, CA, CH, CN, CR, CU, CZ, DE, DK, DM, DZ, EE, ES, FI, GB, GD, GE, GH, GM, HR, HU, ID, IL, IN, IS, JP, KE, KG, KP, KR, KZ, LC, LK, LR, LS, LT, LU, LV, MA, MD, MG, MK, MN, MW, MX, MZ, NO, NZ, PL, PT, RO, RU, SD, SE, SG, SI, SK, SL, TJ, TM, TR, TT, TZ, UA, UG, UZ, VN, YU, ZA, ZW.

(84) Designated States *(regional)*: ARIPO patent (GH, GM, KE, LS, MW, MZ, SD, SL, SZ, TZ, UG, ZW), Eurasian patent (AM, AZ, BY, KG, KZ, MD, RU, TJ, TM), European patent (AT, BE, CH, CY, DE, DK, ES, FI, FR, GB, GR, IE, IT, LU, MC, NL, PT, SE, TR), OAPI patent (BF, BJ, CF, CG, CI, CM, GA, GN, GW, ML, MR, NE, SN, TD, TG).

Published:
— *with international search report*

[Continued on next page]

(54) Title: COMPUTER RACK HEAT EXTRACTION DEVICE

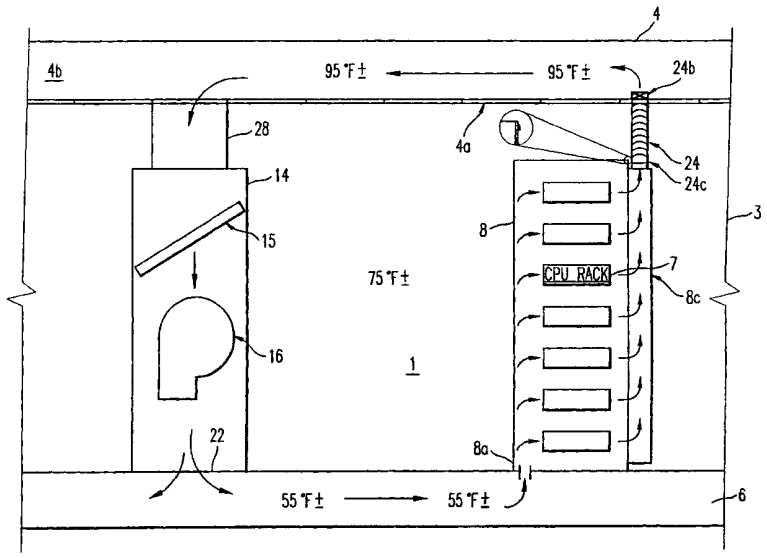

(57) Abstract: An air conditioning cooling apparatus and method which includes the steps of supplying cooling air generated from a cooling apparatus (14-16) into an air passageway (6) formed below a floor (22), guiding the cooling air within the air passageway into an equipment assembly (8) disposed on the floor through an opening (8a) located in the floor; communicating the cooling air introduced into the equipment assembly into a plenum (8c) and introducing the air released from within the equipment into the plenum and communicating the released air through the cooling apparatus for cooling the released air. The method permits temperature differential between the air supplied to the air passageway and the air introduced into the plenum from the equipment assembly to be 45 degrees F to substantially 40 degrees F so as to reduce the power necessary for operating on the fan (16) of the blowing apparatus.

WO 01/62060 A1

For two-letter codes and other abbreviations, refer to the "Guidance Notes on Codes and Abbreviations" appearing at the beginning of each regular issue of the PCT Gazette.

TITLE OF THE INVENTION

COMPUTER RACK HEAT EXTRACTION DEVICE

Cross Reference to Related Applications

[0001] The present application and claims the benefit of U.S. Application Serial No. 60/183,328, filed February 18, 2000.

BACKGROUND OF THE INVENTION

Field of the Invention

[0002] The present invention relates to a computer room reduced air flow method and assembly but is not limited to use in computer rooms and instead can be utilized with respect to any equipment assembly requiring cooling which is positioned in a room. The method and assembly described below permits achieving energy savings while reducing the amount of air required to cool electronic/heat generating equipment, where a computer rack heat extraction device (CRHED) or similar device such as a custom air handling unit (AHU) is utilized. The method and apparatus permits the collection of heat generated, for example, by the rack electronic equipment.

[0003] The conventional computer room method and assembly illustrated in Figure 1 exemplifies the approach for cooling electronic equipment commonly used currently wherein an array of racks of equipment are positioned on a raised floor. Figure 1 illustrates an air conditioning system used in the method and apparatus of a conventional system wherein a room space 1 defined by a room floor, sidewalls 3 and a ceiling 4 having a plurality of ceiling panels is provided. The room floor 2 is positioned a predetermined distance above a base floor 5 such that the room floor 2 and the base floor 5 in combination form a double floor

structure having a free space 6 (i.e. air passageway) formed therein. A rack 7 for one or more computer processing units (CPU) is disposed on the floor 2 wherein electronic cables for the rack are capable of being housed in the free space 6 of the double floor structure but can be specifically communicated to the rack separate from the free air space if desired.

[0004] In installing each of the CPUs or other equipment on the rack on the floor, a plurality of support members can be provided which are stationary by being fixed by bolts or similar fastening elements to predetermined positions on the floor 2.

[00005] The rack 7 is positioned in a casing 8 having air inlets 8a and air outlets 8b formed respectively in a bottom plate of the casing 8 and in the ceiling portion of the casing 8. A computer case fan 9 is operable during operation of the equipment 7 so as to assist the airflow upwardly from the casing through the air outlets 8b. As shown in Figure 1, the CPU members are arranged in an air passageway formed within the casing 8. The floor 2 includes a plurality of floor panels located on pedestals 2b, one panel 2a of which includes a plurality perforations to allow air flow as indicated by the arrows to flow through the front of the outside housing of casing 8, through the CPU rack 7 and out the back of casing 8. A cooling unit 14 is positionable either inside or outside the room 1 and is communicated with a heat exchanger or other air conditioning equipment so as to permit a cooling coil 15 located within unit 14 to cool air blowing therethrough. The cooling unit 14 also includes a fan 16 which is positionable below cooling coil 15. An inlet 20 is provided to allow air from the room to flow thereinto from the room, the air in the casing 8 mixing with room air prior to being introduced into the cooling unit 14, as illustrated in Figure 1. The fan 16 is therefore arranged between the air inlet 20 and an air outlet 22 located at the lower portion of unit 14 and feeds air into the free space 6 located above the base floor 5. The fan 16 thus permits air in the interior of the room to be sucked into the air inlet 20 of the casing 8 and also permits

the air in the room to pass through cooling coil 15. The air in the room is typically at a temperature of 75°F±.

[0006] The above-noted approach for cooling electronic equipment thus permits the area in the free space 6 below the raised floor 2 to be used for cable management and also serve as a supply air plenum. The computer room air conditioning units (CRACUs) utilize cooling coil 15 to cool the air. The CRACUs supply conditioned air at approximately 55°F to the under floor supply air plenum or free space 6. Floor tiles with perforations or slots to allow air to flow from under the raised floor to above the floor are positionable below or are adjacent to the rack 7. Other perforated tiles are positioned throughout the room to provide air supply to other heat generating equipment and to maintain the room in an ambient environment.

[0007] As illustrated by the arrows in Figure 1 showing the air flow, the conditioned air is then drawn into the rack 7 by either convection by air flow from perforated panels 2a into the casing 8 or by fans 9 located in the top of the racks. The air enters the racks at a temperature of approximately 55°F, is heated by the CPUs or other electronics, and flows upwardly out of the rack at approximately a temperature of 95°F. The warm air leaves the rack and mixes with the conditioned ambient environment of the room 1 which is at a temperature of approximately 75°F, and thus returns to the CRACU's at a temperature of approximately 75°F as illustrated in Figure 1.

[0008] In view of the foregoing, it can be understood that conventional CRACU's have a 20° delta T (+ or - 4°F) across the cooling coil 15. This is also coincident with the space delta T which is defined as being the difference in temperature between the air supplied to the space, and the air returned from such space. The temperature of the air returned from the space is usually coincident with the ambient space temperature such that the return air at 75°F enters the return on top of the CRACU's, passes across the cooling coil 15 and is

discharged at a temperature of substantially 55°F at the bottom of unit 14 so as to pass into the free space 6. The required air quantity to cool such space is a direct function of the space delta T. The equation set forth below is used to calculate the required air flow or cubic feet per minute (CFM) of air to cool a space:

CFM = BTUH/1.08 x delta T

[0009] From the foregoing, it can be appreciated that the disadvantage of the conventional system set forth above requires a significant amount of fan horsepower for operation and thus the need has arisen for reducing the amount of horsepower necessary to operate the fan 16.

[0010] The devices of the type described above are exemplified by, for example, by U.S. patent 5,718,628; U.S. Patent 4,774,631 and U.S. Patent 5,910,045, the disclosure of each of which is herein incorporated by reference, as is the disclosure of provisional application 60/183,328, the priority of which has been claimed in the present application.

SUMMARY OF THE INVENTION

[0011] An object of the present invention is to provide a method and apparatus which utilizes an increased delta T to reduce their required air quantity, thus resulting in a reduced airflow method and apparatus. Specifically, the present invention utilizes approximately 40°F delta T to reduce the CFM by substantially 50%. The substantially 50% reduction in the airflow will serve to effectively correspondingly reduce the required power by substantially 50%, resulting in substantial energy savings. A key element of the method and apparatus is an increase in delta T above what is conventionally used. The present invention is capable of operating in a range of delta T from 25°F to 45°F. In this regard, it is noted that the use of a 40°F in the description set forth below is solely exemplary in illustrating device and greater or lesser temperature variations are possible.

[0012] An object of at least one embodiment of the present invention is to provide an air conditioning method and apparatus which utilizes the steps of supplying cooling air generated from a cooling apparatus into an air passageway formed below a floor; guiding the cooling air within the air passageway into an equipment assembly disposed on the floor through an opening located in the floor; communicating the cooling air introduced into the equipment assembly into a plenum and introducing the air released from within the equipment into the plenum for communicating such released air to the cooling apparatus. The method may also include the step of guiding the air from the equipment assembly through at least one duct into the plenum and may include the step of cooling the cooling air generated from the cooling apparatus to a temperature of substantially 55°F while also heating the air released from the equipment assembly to a temperature of substantially 95°F prior to introducing such air to the cooling apparatus so as to form a closed loop in terms of cycling of the air through the cooling assembly and the equipment assembly.

[0013] A further object of the present invention is to obtain a temperature differential between the air supplied to the air passageway or plenum from the cooling apparatus and the air introduced into the plenum from the equipment assembly so as to be substantially 40°F, thus permitting lower power requirements of the fan utilized to assist flow of the air in the closed loop.

[0014] A further object of the present invention is to position the fan between the cooling apparatus and the air passageway so as to permit blowing of the air into the passageway towards the equipment assembly, although it is understood that the fan can be located anywhere within the closed loop so as to assist flow of air between the blowing apparatus and the equipment assembly.

[0015] A further object of the present invention is to provide a method and apparatus

wherein the cooling assembly is located either within or outside the computer room, the equipment assembly comprising either at least one computer processing unit or other type of processing unit in combination with an additional heat generating equipment or with out such equipment. In addition, a further object of the present invention is to cool equipment assembly generating heat which does or does not include computer equipment.

[0016] An additional object of the present invention is to provide an air conditioning assembly for performing the method described above.

BRIEF DESCRIPTION OF THE DRAWINGS

[0017] Various features objects and attendant advantages of the preferred embodiments are illustrated in the figures of the present application which serves to explain the principles of the invention, wherein:

[0018] Fig. 1 illustrates an air conditioning method and apparatus used in a conventional system;

[0019] Fig. 2 illustrates a first embodiment of the present invention utilizing a single duct;

[0020] Fig. 3 illustrates a top plan view for the present invention showing a plenum for the equipment assembly in an open position;

[0021] Fig. 4 illustrates the structure of Fig. 3 but wherein the plenum for the equipment assembly is in a closed position; and

[0022] Fig. 5 shows a rear view of the equipment assembly including a sheet metal plenum which is attachable to the equipment by, for example, a piano-type hinge along one edge thereof which is secured to the equipment assembly with the CPU rack being attachable to the equipment assembly by, for example, quick connect type screws.

DETAILED DESCRIPTION OF THE PREFERRED EMBODIMENTS

[0023] Figure 2 shows an air conditioning system used in a method and apparatus according to a first embodiment of the present invention. As shown therein, the room space is defined by a room floor 2, side walls 3 and upper ceiling 4, a lower ceiling 4a formed, for example, of ceiling tiles defining a ceiling plenum 4b, and a base floor 5. The room floor 2 is formed a predetermined distance from the base floor such that the room floor and the base floor 5 collectively form a double floor structure having a free space 6 or air passageway formed therein within which electric cables may also be housed. As shown in Figure 2, air flow from the space 6 can enter one side portion of each of the CPU racks and flow across the same towards a plenum 8c which can run the full height of the equipment assembly so as to permit air to flow across each CPU in the rack and then flow upwardly towards a plurality of ducts 24. The ducts 24 are sealed with respect to the equipment assembly by, for example, rubber gaskets 26 with similar rubber gaskets 26 being provided between the duct 24 and the lower ceiling 4a. Also provided are computer case fans 24a and 24b, if desired, to assist in air flow through the ducts 24. As illustrated in Figures 3 and 4, the plenum 8c is, for example, made of sheet metal hinged by piano type hinges 8b to the equipment assembly with the CPUs themselves being capable of being attached to the equipment assembly casing by quick connect type screws or other fasteners.

[0024] As illustrated in Figure 5, the plurality of ducts 24,24 can be utilized to help assist airflow to the plenum 4b formed between ceiling 4 and lower ceiling 4a. As illustrated in Figure 2, air flowing from the cooling coil is at substantially 55°F while the temperature of the air existing from the equipment assembly to the plenum in the ceiling is at substantially 95°F and is kept separate from the air in the room which is at a temperature of 75°F. The air in the plenum 4b is fed via a duct 28 downward towards the cooling coil 15 in the cooling

assembly 14 and is thus cooled to a temperature of substantially 55°F. Therefore, in the above-noted formula, it can be understood that by doubling the delta T from 20° to 40°, it is possible to reduce by 50% the required airflow or CFM of air to cool the space. Particularly, the reduced airflow approach utilizes an increased delta T to reduce the required air quantity movable by the fan 16. More specifically, it is proposed to use an approximately 40° delta T to reduce the CFM by 50%, the 50% reduction airflow effectively reducing the required fan horsepower by 50% resulting in substantially energy savings. Based upon experimentation utilized in accordance with the present invention, a key aspect of the present invention is to provide an increase in delta T above what is conventionally utilized with it being noted that the approach proposed by the present invention is workable at a range of delta T from 20°F to 50°F.

[0025] From the foregoing, it can be appreciated that the cooled supply of air at 55°F is discharged into the raised floor 2, the cooled air entering the computer room 1 through, for example, perforated floor tiles in from of or under each CPU rack. A supply of cool air at approximately 55°L will be pulled horizontally or vertically through the electrical equipment cabinet by the CRHED, and discharged into the ceiling plenum at approximately 95°F such that the 40°F delta T (i.e., 95°F - 45°F) comprises the effective space delta T. The CRHED may comprise a sheet metal (or a similar rigid material) housing which is between 3 inches and 6 inches deep and attached to the back of the cabinet/rack. The supplemental fans 24a, 24b as part of the CRHED can provide the mechanical means to move the air through the cabinet/rack. Perforated floor tiles can be located at each electronic rack and throughout the room to maintain the room ambient conditions.

[0026] As can be appreciated from the foregoing, the purpose of the device is to collect the heat dissipated by the computer equipment or other equipment generating heat in the rack,

and channel it so that the warm air is discharged into the ceiling plenum 4b. The primary reason for discharging heat into the plenum is to provide a method of returning the warm air (at approximately 95°F) directly to the CRACU's. The CRACU's will be modified from the conventional configuration shown in Figure 1 with a return plenum connecting the open return to the top of the ceiling plenum. This completes the closed air loop and allows the CRACU's to take return air at 95°F, cool such air to 55°F so as to create the 40° delta T required for the reduced airflow.

[0027] An alternate embodiment as part of this approach may use custom air handling units (AHU's). These AHU's serve to replace the CRAHU's to supply conditioned air to the space. The AHU's can be located, for example, in mechanical rooms adjacent to the raised floor space for ducting the supply air under the raised floor, and taking return air from the ceiling plenum. This approach would also allow for the use of an enthalpy economizer allowing for greater energy conservation. Thus, the air conditioning equipment (AHU's and CRACU's) referred to above encompasses the use of an enthalpy economizer or similar device. In addition, a duct directly connecting casing 8 and casing 14 is possible without being located in the ceiling. Here the term "duct" is intended to be the equivalent of plenum.

[0028] In view of the foregoing, significant improvements are provided by the present invention as compared with the conventional approach in that (1) the use of a 40°F delta T (approximately) to reduce energy consumption is obtainable, (2) the collection of the heat from the electronics equipment with CRHED is possible and (3) it is possible to direct the heat to the ceiling plenum and return it to the CRACU or other AHU, as desired to obtain the efficiencies described above.

[0029] Additional advantages and modifications readily occur to those skilled in the art. Therefore, the invention in its broader aspects is not limited to specific details, and the

illustrated examples shown and described herein. Accordingly, various modifications may be made without departing from the spirit or scope of the general inventive concept as defined by the appended claims and their equivalents.

CLAIMED:

1. An air conditioning method, comprising the steps of:

supplying cooling air generated from a cooling apparatus into an air passageway formed below a floor;

guiding the cooling air within the air passageway and to an equipment assembly disposed on the floor through an opening located in the floor;

communicating the cooling air introduced into the equipment assembly into a plenum; and

introducing the air released into the plenum from with said equipment into the plenum and communicating the released air through the cooling apparatus for cooling the released air.

2. A method as claimed in Claim 1, which comprises guiding the air released from the equipment assembly through at least one duct into the plenum.

3. The method according to Claim 2, which comprises guiding the air in the air passageway into the equipment assembly, guiding the air in the equipment assembly into an additional plenum connected to the equipment assembly and introducing the air in the additional plenum into said at least one duct for return of the released air to the cooling apparatus.

4. The method as claimed in Claim 1, which comprises cooling the cooling air generated from the cooling apparatus to a temperature of substantially 55°F.

5. The method according to Claim 4, which comprises heating the air released from the equipment assembly to a temperature of substantially 95°F prior to communicating such air to the cooling apparatus.

6. The method according to Claim 1, wherein a temperature differential between the air supplied to the air passageway from the cooling apparatus and the air released into the plenum from the equipment assembly is substantially 40°F.

7. The method according to Claim 1, which comprises positioning a fan between the cooling apparatus and the air passageway formed in the floor and blowing the air into the passageway towards the equipment assembly by said fan.

8. The method according to Claim 1, wherein the room comprises a computer room and wherein the cooling apparatus and equipment assembly are positioned in the computer room.

9. The method according to Claim 1, wherein the room comprises a computer room and wherein the cooling assembly is located outside the computer room.

10. The method according to Claim 1, wherein said equipment assembly comprises at least one computer processing unit.

11. An air conditioning assembly, which comprises:

a cooling apparatus in communication with an air passageway formed below a floor

of a room for introducing cooling air into the passageway;

an equipment assembly positioned on the floor, the equipment having an opening in communication with an opening formed in the floor for receiving the cooling air from the cooling apparatus;

a plenum in communication with the equipment assembly for receiving air flowing from the equipment assembly which has been heated by the equipment assembly, said plenum communicating the air heated by the equipment assembly back to the cooling apparatus for being cooled.

12. An air conditioning assembly as claimed in Claim 11, which comprises at least one duct interconnecting the equipment assembly to the plenum for communicating air heated by the cooling equipment into the plenum for return to the cooling assembly.

13. The air conditioning assembly as claimed in Claim 11, which comprises an additional plenum connected to the equipment apparatus for guiding air heated by the equipment apparatus into the plenum in communication with the cooling apparatus.

14. An air conditioning assembly as claimed in Claim 11, wherein the cooling apparatus cools the cooling air to a temperature of substantially 55°F.

15. The air conditioning assembly as claimed in Claim 11, wherein the equipment apparatus heats the air blowing into the plenum to a temperature of substantially 95°F.

16. The air conditioning assembly according to Claim 11, wherein a temperature

differential between the air supplied to the air passageway and the air introduced into the plenum from the equipment assembly is substantially 40°F.

17. The air conditioning assembly according to Claim 11, which comprises a fan position between a cooling apparatus and the air passageway formed in the floor for blowing the air in the passageway towards the equipment assembly.

18. The air conditioning assembly as claimed in Claim 11, wherein the room comprises a computer room wherein the cooling apparatus is located outside the computer room.

19. An air conditioning assembly as claimed in Claim 11, wherein the equipment assembly comprises at least one computer processing unit.

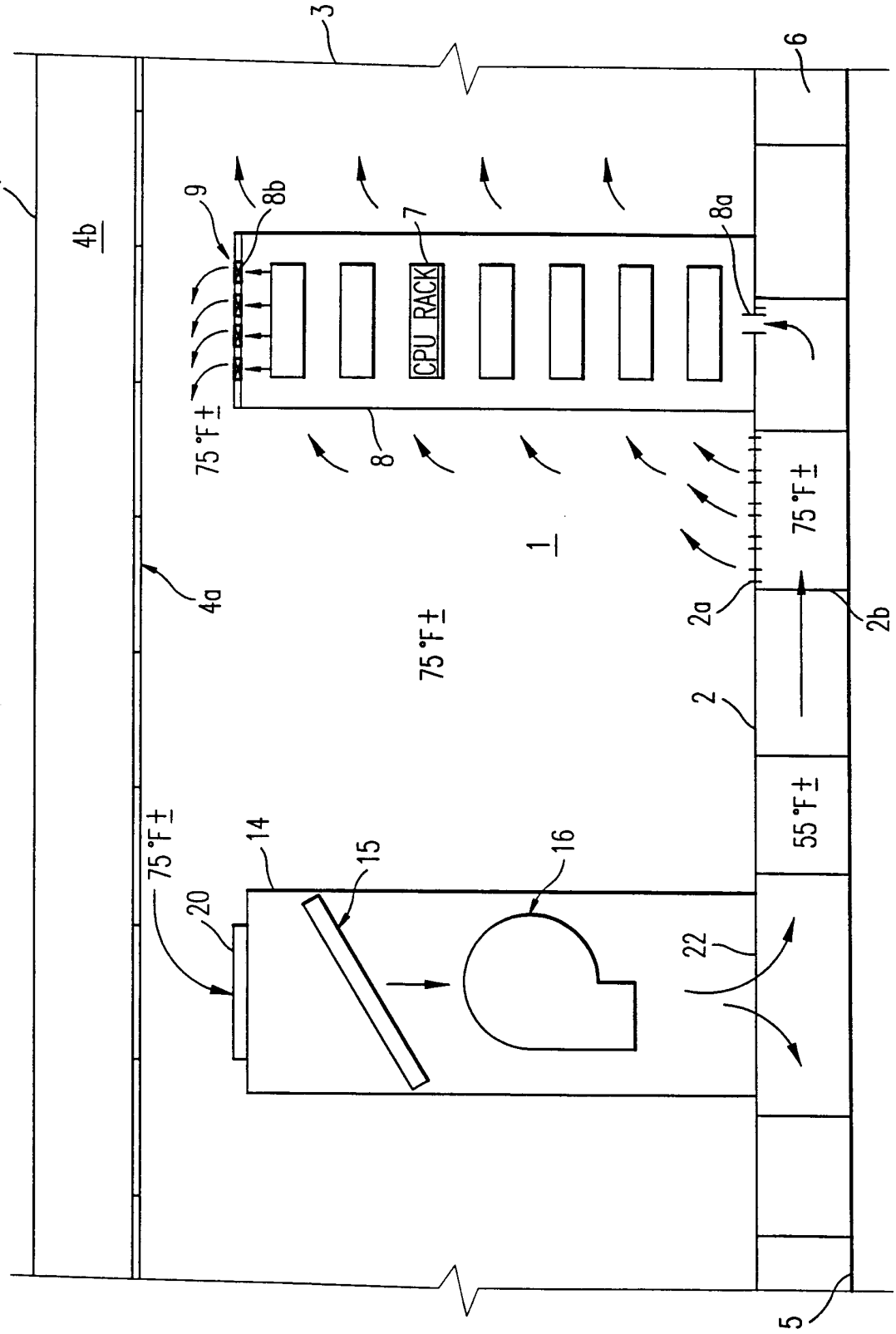
3
6
4
4b
9
8b
7
8a
CPU RACK
75 °F ±
8
1
75 °F ±
4a
2a
2b
2
55 °F ±
75 °F ±
14
15
16
20
22
5

FIG. 1

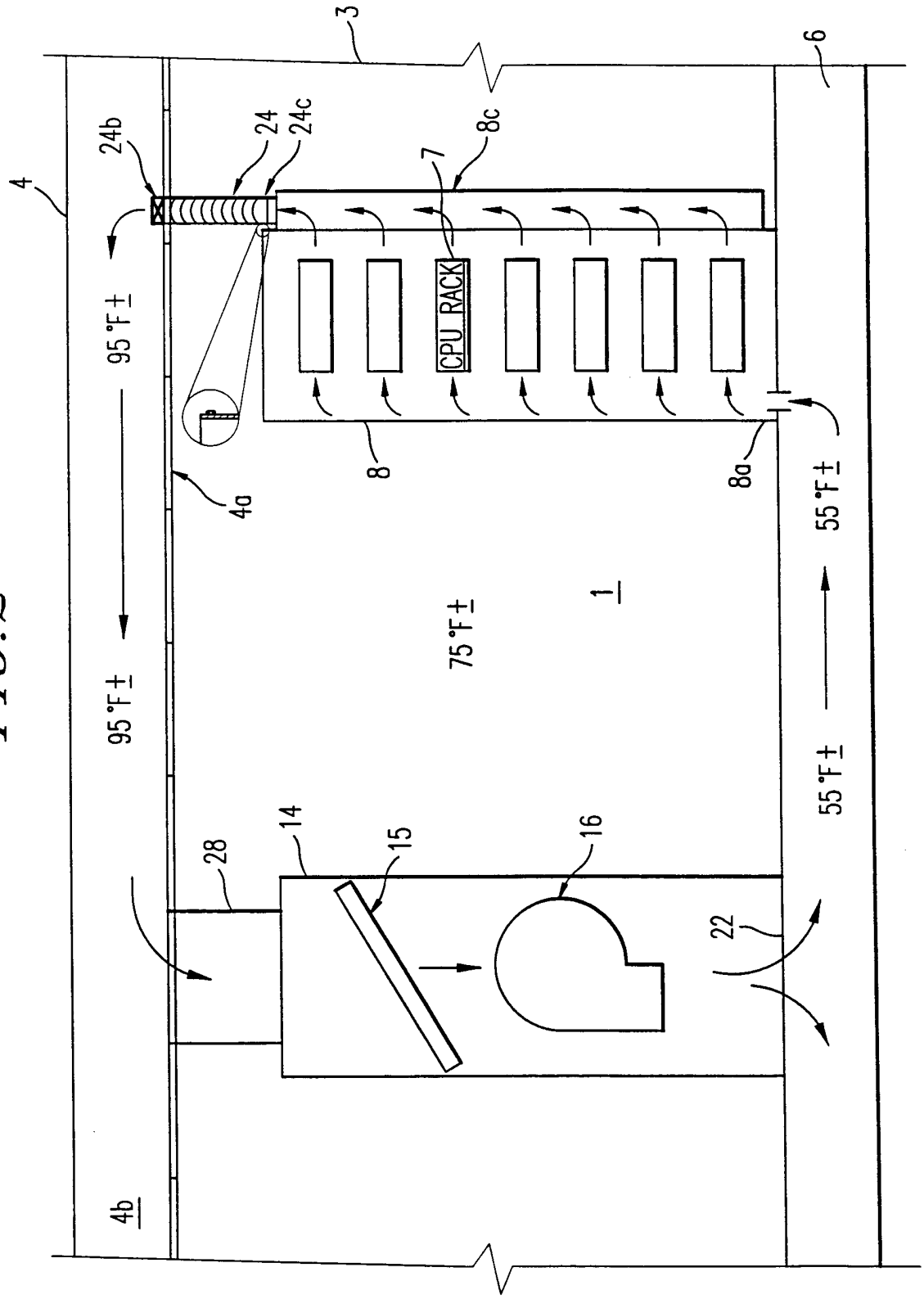
3
6
4
24b
24
24c
8c
7
CPU RACK
95 °F ±
95 °F ±
4a
8
8a
55 °F ±
55 °F ±
75 °F ±
1
4b
28
14
15
16
22

FIG. 2

FIG. 3

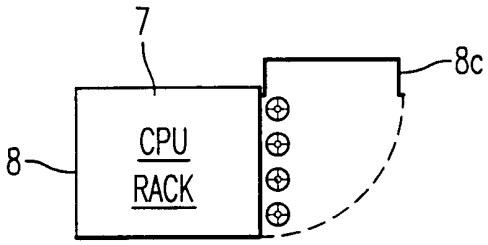

FIG. 4

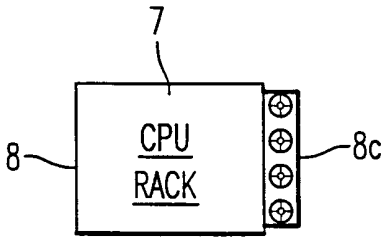

FIG. 5

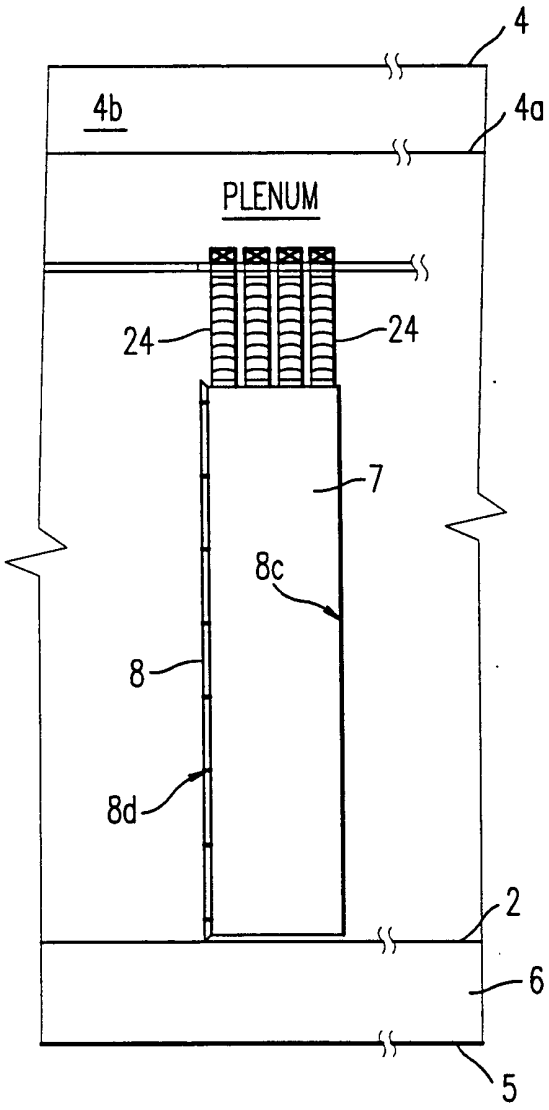

INTERNATIONAL SEARCH REPORT

International application No.
PCT/US01/04964

A. CLASSIFICATION OF SUBJECT MATTER

IPC(7) :H05K 7/20; F28F 7/00
US CL :62/259.2; 165/80.3; 361/695
According to International Patent Classification (IPC) or to both national classification and IPC

B. FIELDS SEARCHED

Minimum documentation searched (classification system followed by classification symbols)

U.S. : 62/259.2, 238.6; 165/80.3; 361/695, 691, 696, 697

Documentation searched other than minimum documentation to the extent that such documents are included in the fields searched

None

Electronic data base consulted during the international search (name of data base and, where practicable, search terms used)

None

C. DOCUMENTS CONSIDERED TO BE RELEVANT

Category*	Citation of document, with indication, where appropriate, of the relevant passages	Relevant to claim No.
Y	US 4,089,040 A (PAULSEN) 09 May 1978, column 10, line 54 to column 12, line 58.	1-19
Y	US 5,671,805 A (STAHL et al) 30 September 1997, column 1, line 66 to column 2, line 28.	1-19
A	US 4,352,274 A (ANDERSON et al) 05 October 1982, see the entire document.	1-19
A	US 4,196,526 A (BERTI) 08 April 1980, see the entire document.	1-19
A	US 5,544,012 A (KOIKE) 06 August 1996, see the entire document.	1-19
A	US 5,765,743 A (SAKIURA et al) 16 June 1998, see the entire document.	1-19

[X] Further documents are listed in the continuation of Box C. [ ] See patent family annex.

*	Special categories of cited documents:	"T"	later document published after the international filing date or priority date and not in conflict with the application but cited to understand the principle or theory underlying the invention
"A"	document defining the general state of the art which is not considered to be of particular relevance	"X"	document of particular relevance; the claimed invention cannot be considered novel or cannot be considered to involve an inventive step when the document is taken alone
"E"	earlier document published on or after the international filing date	"Y"	document of particular relevance; the claimed invention cannot be considered to involve an inventive step when the document is combined with one or more other such documents, such combination being obvious to a person skilled in the art
"L"	document which may throw doubts on priority claim(s) or which is cited to establish the publication date of another citation or other special reason (as specified)	"&"	document member of the same patent family
"O"	document referring to an oral disclosure, use, exhibition or other means		
"P"	document published prior to the international filing date but later than the priority date claimed		

Date of the actual completion of the international search	Date of mailing of the international search report
03 APRIL 2001	24 APR 2001
Name and mailing address of the ISA/US Commissioner of Patents and Trademarks Box PCT Washington, D.C. 20231 Facsimile No. (703) 305-3230	Authorized officer WILLIAM E. TAPOLCAI Telephone No. (703) 308-2640

Form PCT/ISA/210 (second sheet) (July 1998)★

INTERNATIONAL SEARCH REPORT

International application No.
PCT/US01/04964

C (Continuation). DOCUMENTS CONSIDERED TO BE RELEVANT

Category*	Citation of document, with indication, where appropriate, of the relevant passages	Relevant to claim No.
A	US 5,467,607 A (HARVEY) 21 November 1995, see the entire document.	1-19
A	US 5,826,432 A (LEDBETTER) 27 October 1998, see the entire document.	1-19
A	US 4,851,965 A (GABUZDA et al) 25 July 1989, see the entire document.	1-19