Aug. 29, 1939. H. E. HOLLMANN 2,171,212

ELECTRON DISCHARGE DEVICE

Filed March 27, 1937

Fig. 1

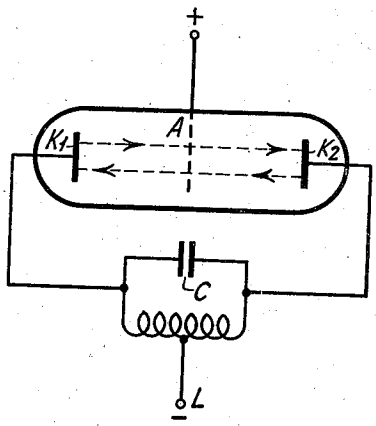

Fig. 2

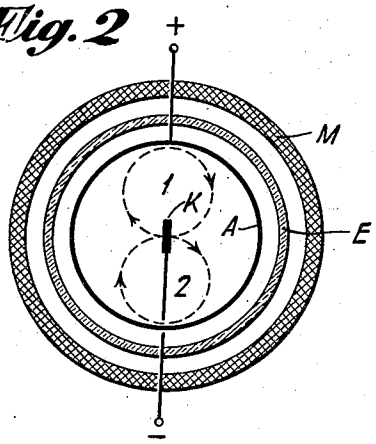

Fig. 3

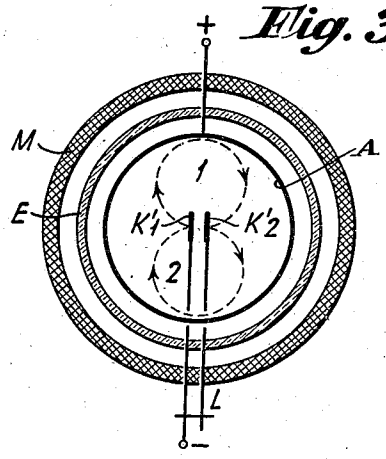

Fig. 4

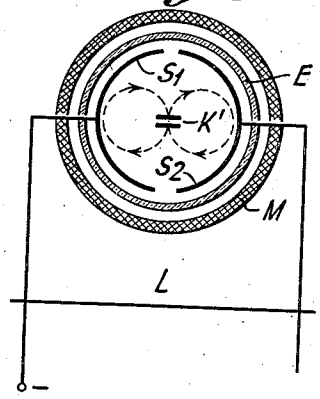

Fig. 5

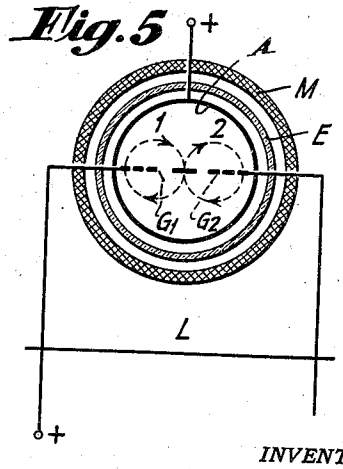

INVENTOR
HANS ERICH HOLLMANN

BY Charles McClain
ATTORNEY

Patented Aug. 29, 1939 2,171,212

UNITED STATES PATENT OFFICE

2,171,212

ELECTRON DISCHARGE DEVICE

Hans Erich Hollmann, Berlin, Germany, assignor to Telefunken Gesellschaft für Drahtlose Telegraphie m. b. H., Berlin, Germany, a corporation of Germany

Application March 27, 1937, Serial No. 133,316
In Germany April 20, 1936

7 Claims. (Cl. 250—27.5)

My invention relates to electron discharge devices utilizing the phenomena of secondary emission and magnetic control.

The electron tubes serving for the production of electrical oscillations operate ordinarily with glow emission, i. e., the electrons sustaining and controlling oscillations are emitted by a glow or thermionic cathode, the heating of which requires considerable energy in larger tubes. Recently however, tubes depending upon secondary electrons which are released from the atom structure of the cathode surface when primary electrons impinge thereon have become of increasing interest. In these tubes the cathode or the cathodes remain cold, thus avoiding the necessity of heating energy.

The object of my invention is to provide an improved type of electron discharge device utilizing secondary emission phenomena and magnetic control.

The novel features which I believe to be characteristic of my invention are set forth with particularity in the appended claims, but the invention itself will best be understood by reference to the following description taken in connection with the accompanying drawing in which Figure 1 is a schematic diagram of a conventional type of magnetically controlled secondary emission electron discharge device, Figures 2 to 5 inclusive are diagrammatic transverse sections of electron discharge devices made according to my invention.

In order that the electron current might be continuously maintained by secondary emission, it is necessary that all or part of the electrons once produced, again and again release new secondary electrons, and this in a number which is greater or at least equal to the number of electrons being lost at the transition to the anode or to other absorption electrodes. In order to obtain such continuous production of secondary electrons, the arrangement shown in Figure 1 has been developed. Here the two flat cold cathodes K_1 and K_2 have no emission property as such, but are covered with layers for producing secondary emission of a possibly high yield, such as caesium oxide layers. It is known that such layers are capable of emitting secondary electrons in an amount which is equal to from 10 to 20 times the number of primary electrons impinging thereon with sufficient velocity. Between the two cathodes K_1 and K_2 a suitable anode A is situated which permits the passage therethrough of all or a part of the electrons passing thereto. In the example herein shown, a grid shaped anode A is indicated which absorbs a small part of the electrons, but permits the passing of the greater part unhindered through its meshes. Principally, the scheme is the same if the real grid anode is replaced by a virtual acceleration grid, for instance in the form of an anode ring or the like surrounding the discharge space. In flat electrode structures it was found to be preferable to concentrate the electron current by means of an additional magnetic field whose lines of force extend in the direction of the electrical field lines, i. e., from cathode to cathode. However, through special electrode arrangements the desired concentration can also be obtained by purely electrostatic means.

The operation of the automatic secondary emission and the excitation of oscillations are believed to be as follows: When applying plate potential, a few electrons, for instance photo electrons, may at first be emitted by one of the two cathodes. These electrons are accelerated by the grid and a part thereof impinge on the opposite cathode where they may release for instance 10 times as many secondary electrons. These return again to the first cathode producing a still greater number of secondary electrons and so on. In this manner the entire emission is gradually built up, until a final stationary state is reached determined either by the limited yield of the cathodes, or else by the space charges.

The excitation of oscillations in such an arrangement can be considered simply as pendulum movements of the electrons such as are known in the Barkhausen retarding field method, and more especially in the push-pull retarding field tubes. The only difference which hereby exists is that the electrons do not return in front of the cathodes on both sides, and that therefore, a definite electron cloud can oscillate several times back and forth, but instead thereof in each alternation a new secondary cloud is produced and introduced into the oscillation performance. There is connected with the action a synchronous emission control in rhythm with the travel or transit lines of the electrons, resulting in an especially favorable excitation.

In the principal form as described so far, the building up performance is difficult since the secondary electrons emitted for instance by K_1 and after passing through the acceleration field between K_1 and A would be retarded to such a high degree in the equal but opposite retarding field between A and K_2 that they arrive at K_2 with zero velocity. Under these circumstances secondary electrons could not be released.

In order that a certain velocity of impinging is retained in the electrons passing to K_2 the latter must be positively biased to a slight degree. In the following alternation however, K_1 must have a positive bias potential in order that the same is also true as regards the secondary electrons passing from K_2 to K_1. Thus an alternating potential must exist between the two cathodes whose alternation conforms with the travel or transit time of the electrons from cathode to cathode. This auxiliary potential may be furnished by a special control transmitter. But it will be simpler to place between the two cathodes a suitable resonance circuit LC in Figure 1, or a Lecher line or the like. The latter is caused to oscillate by a periodic electron current, so that the transmitter supplies itself with the necessary control potential. Only with this presumption is the building up of the emission possible and the excitation of oscillations becomes an optimum.

As already above stated the maximum emission currents obtainable in the end state, depend on the yield of the cathode layers on the one hand, and on the other hand, upon the space charges between the cathodes. While the yield of the cathodes can be greatly enhanced through the choice of suitable materials, the space charges depend on the conditions established by the form and value of the discharge space.

In the present invention a way is shown whereby the arrangement is freed to a wide extent from this limitation. The principle serving this end resides in that the two electron currents in the opposite directions i. e. from K_1 towards K_2 and from K_2 towards K_1 are separated, and deflected into different discharge paths. The means by which such separation of the two electron currents is obtained is, in accordance with the invention, a magnetic field extending at right angle ot the electron movement.

The action of this magnetic field will now be explained in connection with the illustration in Figure 2. The tube shown comprises envelope E which has only a single flat cathode K provided on both sides however with layers capable of producing secondary emission. The cathode is surrounded by an anode cylinder A which plays the part of the acceleration grid in Figure 1. Furthermore, the tube is permeated by a homogeneous magnetic field induced by electromagnet M and the lines of force of which are vertical to the drawing plane. Now, if for instance photo electrons pass towards the left from the cathode, they prescribe approximately a circular course (1) under the simultaneous action of the radial electrical field and axial magnetic field, and after passing through this circle they impinge upon the rear, i. e., from the right again upon the cathode. Hereby secondary electrons are released departing from the cathode in the direction opposite to that of the primary electrons, and they are deflected by the magnetic field in the reversed circular course 2 and after having followed this course they again impinge upon the left of the cathode, whereafter the performance will be repeated. It can be seen that in the new arrangement the same building up performance takes place as in the purely electrostatic tube of Figure 1. The space charges previously concentrated upon the space between the two cathodes K_1 and K_2 are now distributed over the two spaces permeated by the circular paths 1 and 2.

In the case described the requirement must be fulfilled namely that the elctrons must impinge on the cathode always with sufficient velocity so as to be capable of carrying out the work necessary for releasing the secondary electrons from the cathode material. Also in this case, the cathode is to carry alternating potential whose frequency conforms with the travel periods of the electrons, and which potential is derived either from a separate auxiliary transmitter, or else through excitation of an oscillatory system connected to the tube.

The most favorable construction of this resonance system offers numerous possibilities of which only a few examples can herein be given. The simplest means resides in connecting the cathode to a straight wire and to carry out the tuning by means of a reflection disk displaceable on this wire. Another possibilty resides in that between cathode and anode a resonance system is placed so that the alternating potentials will be produced at the cathode and anode. When producing ultra-short waves, the anode and cathode can be designed as concentric energy lines whereby the effect will not be jeopardized when giving the cathode a cylindrical shape. In order to connect the cathode alone to a double line, it can be divided into two parts K'_1 and K'_2 such as indicated in the tube shown in Figure 3, the functoning of which is self evident in view of the above. Finally, since it is the field intensity between cathode and anode and not the absolute potential of the cathode that is to be considered, the resonance system to be excited and which performs the control can also be connected to a single anode cylinder for instance in that the anode cylinder in the manner known from the Habann-tube is divided ito two or a greater number of segments S_1 and S_2 as shown in Figure 4 and these connected to a Lecher line L, or continued as an energy line with arcuate cross section of the conductor. The simplest case of a double division resulting from these viewpoints such as shown schematically in Figure 4, likewise does not require further elucidation.

Finally, in Figure 5 an arrangement is shown in which the plate cylinder A produces a constant radial field, while the periodic acceleration and retarding of the electrons is obtained by two radially disposed grids G_1 and G_2 connected to a Lecher wire line L. After passing through the grids the electron currents periodically deliver energy to the grids and cause the outer system to oscillate.

Otherwise the operating conditions of the new arrangements with the additional magnetic field are the same as in the electrostatic transmitters. Aside from the decreased space charge they have the advantage over the latter in that they can be produced with substantially smaller dimensions, and that for this reason and owing to the higher average velocity of the electrons considerably higher frequencies are attainable.

While I have indicated the preferred embodiments of my invention of which I am now aware and have also indicated only one specific application for which my invention may be employed, it will be apparent that my invention is by no means limited to the exact forms illustrated or the use indicated, but that many variations may be made in the particular structure used and the purpose for which it is employed without departing from the scope of my invention as set forth in the appended claims.

What I claim as new is:

1. An electron discharge device having an evacuated envelope containing a straight cold cathode, an anode surrounding and parallel to

said cathode, means for providing only a constant magnetic field during operation of the device and parallel to and surrounding said cathode, for causing electrons leaving said cathode to travel in orbits, said orbits originating at a point in the surface of said cathode and describing a path intersecting the surface of said cathode substantially 180° removed from said point and with sufficient velocity to produce secondary electrons.

2. An electron discharge device having an evacuated envelope containing a straight cold cathode having flat parallel surfaces coated with material which readily emits secondary electrons, an anode surrounding and parallel to said cathode, means for providing only a constant magnetic field during operation of the device and parallel to and surrounding the cathode, for causing primary electrons to travel in orbits, said orbits originating at a point in a flat surface of said cathode and describing a path intersecting another flat surface of said cathode substantially 180° removed from said point and with sufficient velocity to produce secondary electrons.

3. An electron discharge device having an envelope containing a cold cathode comprising two flat parallel members coated on their outer surfaces with emitting material which readily emits secondary electrons, an anode coaxial with and surrounding said cathode, means for producing a magnetic field parallel to and surrounding said cathode, for causing electrons leaving the coated surface of one of said flat parallel members to travel in an orbit around the cathode and impinge on the coated surface of the other flat member of said cathode with sufficient velocity to produce secondary electrons, said secondary electrons in turn traveling through an orbit and impinging on the coated surface of the first flat electrode for producing other secondary electrons.

4. An electron discharge device having an envelope containing a straight cold cathode and an anode coaxial with and surrounding said cathode and comprising a pair of oppositely disposed segments, means for producing a magnetic field parallel to and surrounding said cathode, for causing the electrons leaving one side of said cathode to travel in an orbit around said cathode and impinge on the surface of the cathode substantially 180° removed from said one side of said cathode and with sufficient velocity to produce secondary electrons.

5. An electron discharge device having an envelope containing a straight cold cathode and an anode coaxial with and surrounding said cathode and comprising a pair of oppositely disposed segments, means for producing a magnetic field parallel to and surrounding said cathode, for causing the electrons leaving one side of said cathode to travel in an orbit around said cathode and impinge on the surface of the cathode substantially 180° removed from said one side of said cathode and with sufficient velocity to produce secondary electrons, and a Lecher wire system connected between the anode segments.

6. An electron discharge device having an envelope containing a straight cold cathode, an anode surrounding and parallel to said cathode, means for providing a magnetic field parallel to and surrounding said cathode, for causing electrons leaving said cathode to travel in orbits, said orbits originating at a point in the surface of said cathode and describing a path intersecting the surface of said cathode substantially 180° removed from said point with sufficient velocity to produce secondary electrons, and grid electrodes on opposite sides of said cathode and midway between the surfaces between which electrons travel.

7. An electron discharge device having an envelope containing a straight flat cold cathode, an anode surrounding and parallel to said cathode, means for providing a magnetic field parallel to and surrounding said cathode, for causing electrons leaving said cathode to travel in orbits, said orbits originating at a point in the surface of said cathode and describing a path intersecting the surface of said cathode substantially 180° removed from said point with sufficient velocity to produce secondary electrons, and a pair of grid electrodes lying in the same plane as said flat cathode whereby the electrons in moving from one surface of the cathode to the other must pass through said grid electrodes, and a Lecher wire system connected to said grid electrodes.

HANS ERICH HOLLMANN.