June 19, 1956 G. A. MITCHELL ET AL 2,751,526

MAGNETIZING APPARATUS

Filed April 13, 1954 2 Sheets-Sheet 1

Fig. 1

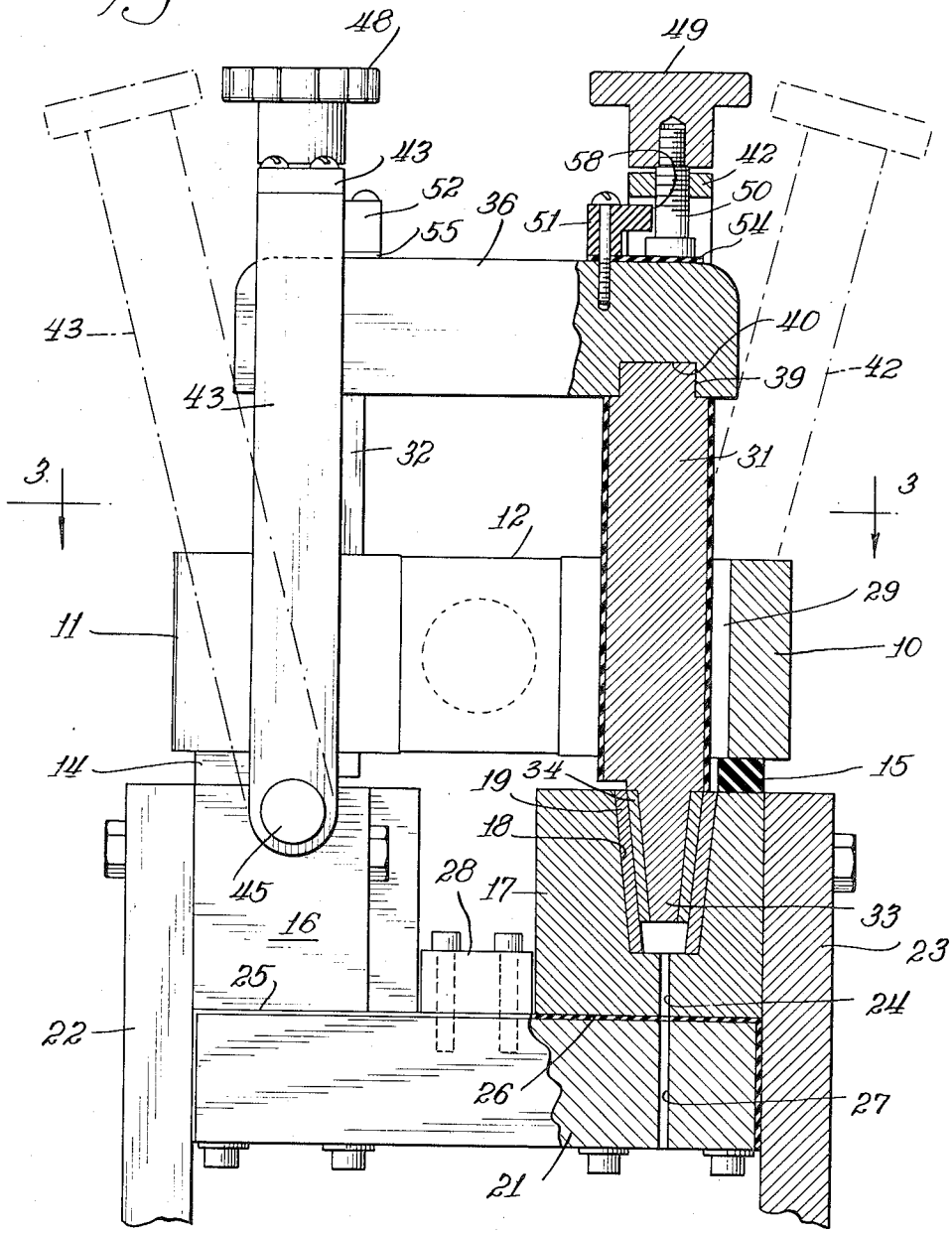

INVENTORS:
G. A. MITCHELL,
BY N. V. YOST
C. B. Hamilton
ATT'Y

June 19, 1956 G. A. MITCHELL ET AL 2,751,526

MAGNETIZING APPARATUS

Filed April 13, 1954 2 Sheets-Sheet 2

Fig. 3

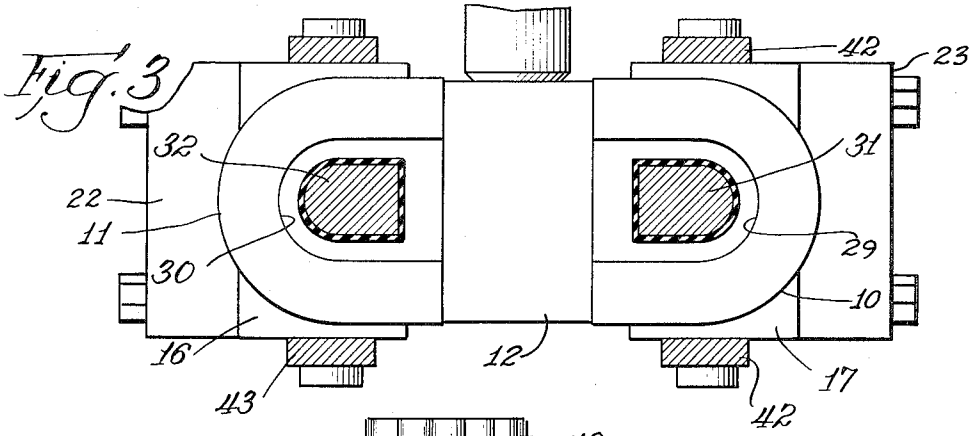

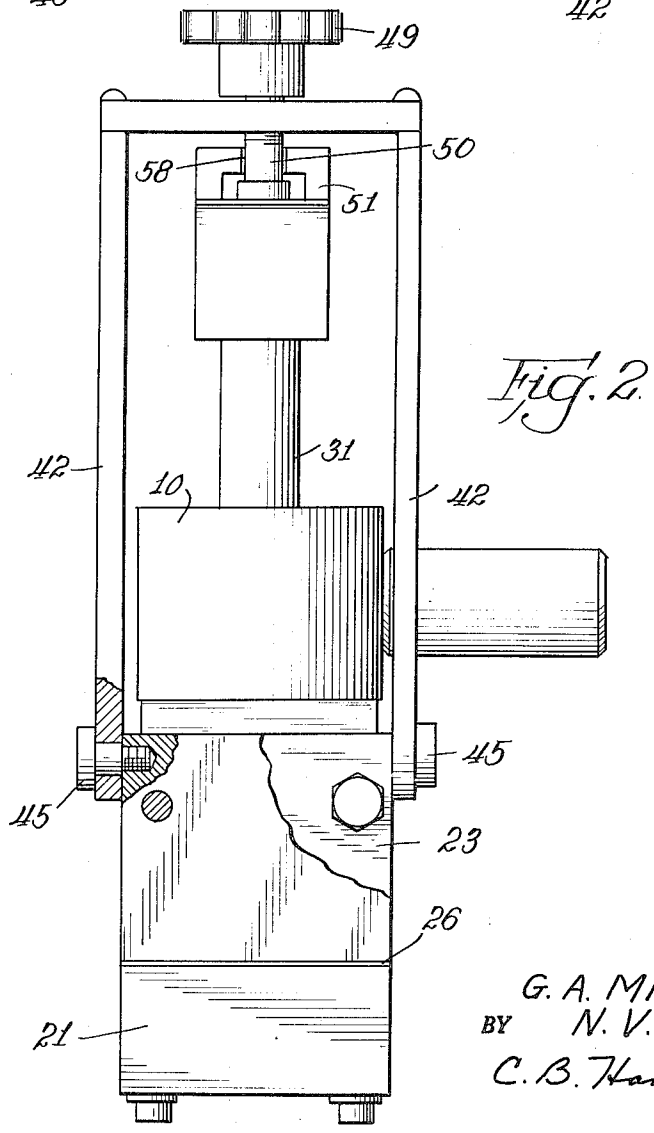

Fig. 2.

INVENTORS:
G. A. MITCHELL,
BY N. V. YOST
C. B. Hamilton
ATT'Y

United States Patent Office 2,751,526
Patented June 19, 1956

2,751,526

MAGNETIZING APPARATUS

Gerald A. Mitchell, White Bear Lake, and Norman V. Yost, St. Paul, Minn., assignors to Western Electric Company, Incorporated, New York, N. Y., a corporation of New York

Application April 13, 1954, Serial No. 422,728

5 Claims. (Cl. 317—203)

This invention relates to magnetizing apparatus, and more particularly to apparatus for magnetizing Alnico magnets of magnetrons.

An object of the invention is to provide apparatus for passing high currents through the cores of magnets to magnetize them.

Another object of the invention is to provide apparatus for passing high currents through pairs of magnets secured to magnetrons after the magnets have been brazed to the magnetrons to magnetize the magnets.

A further object of the invention is to provide a magnetizing apparatus which may be quickly assembled and disassembled for loading and unloading, and also may carry very large currents for magnetizing.

An apparatus illustrating certain features of the invention may include a pair of blocks having sockets therein connected to bus bars of the opposite polarity, and highly conductive cores having tapered ends are inserted into the sockets in upright positions after a magnetron having a permanent magnet to be magnetized on each side thereof has been mounted on the blocks. A spanning bar then is located on the cores and is locked thereto, and clamps pivotally secured to the blocks are actuated to lock the assembly together, after which a large current is passed through the cores and the spanning bar to magnetize the magnets.

A complete understanding of the invention may be obtained from the following detailed description of an apparatus forming a specific embodiment thereof, when read in conjunction with the appended drawings, in which:

Fig. 1 is a partially sectional front elevation of an apparatus forming one embodiment of the invention;

Fig. 2 is a side elevation of the apparatus shown in Fig. 1, and

Fig. 3 is a horizontal section taken along line 3—3 of Fig. 1.

Referring now in detail to the drawings, there is shown therein an apparatus for magnetizing Alnico magnets **10** and **11** of a magnetron **12**, and, to magnetize the magnets **10** and **11**, the magnetron is placed in a position resting on blocks **14** and **15** composed of insulating material secured to copper conductive blocks **16** and **17**, respectively. The blocks **16** and **17** are provided with conical sockets, of which a conical socket **18** is shown, having soldered thereto liners **19** composed of a copper-chromium alloy which is highly conductive and spark-resistant, such as, for example, Mallory metal. The conductive blocks **16** and **17** are mounted on a non-magnetic base **21** and have copper bus bars **22** and **23** secured thereto. The conductive blocks are insulated from the base by insulating plates **25** and **26** so that the base does not form a conductive path between the two blocks **16** and **17**. An insulated block **28** locates the blocks **16** and **17** precisely on the base **21**. Knockout and cleaning holes **24** and **27** are provided in the blocks **16** and **17** and the base **21**.

After the magnetron is placed on the insulating blocks

14 and **15** with openings **29** and **30** in the magnets **10** and **11** aligned with the sockets **18**, copper cores **31** and **32** having frustoconically tapered ends **33** mounting frustoconical sleeves **34** soldered rigidly thereto are placed in the liners **19** so that the cores **31** and **32** are in upright positions extending through the openings **29** and **30** in the magnets **10** and **11**. Thin coverings **35** of insulating material on the peripheries of the cores **31** and **32** prevent sparking between the cores and the magnets **10** and **11**. The sleeves **34** are complementary in shape to the liners **19** and are of the same metal as the liners **19**. A spanning bar **36** composed of copper then is placed on the cores **31** and **32** to connect them together electrically. Shanks **39** of the cores **31** and **32** fit closely into sockets **40** in the spanning bar **36**. Then yokes **42** and **43** composed of non-magnetic material and secured pivotally to the blocks **16** and **17** by pins **45** are swung over the spanning bar **36**, and knobs **48** and **49** are turned to push cap screws **50** downwardly against insulating plates **54** and **55** to form good electrical contact between the spanning bar **36** and the cores **31** and **32** and between the cores and the liners **19**. Pulling brackets **51** and **52** having locating notches **58** therein serve to correctly position the yokes **42** and **43** initially.

To magnetize the magnets **10** and **11**, D. C. power is applied to the bus bars **22** and **23** and current of about 150,000 amperes flows between the bus bars through a path including the block **16**, the core **32**, the spanning bar **36**, the core **31** and the block **17**, all in series, and the high current flowing through the cores **31** and **32**, which are highly conductive, magnetize the Alnico magnets **10** and **11** to produce the polarity desired. The current then is turned off, and the yokes **42** and **43** are released from the spanning bar and swung to the sides of the apparatus, after which the spanning bar **36** is lifted away from the cores **31** and **32**, the cores are removed from the blocks **16** and **17**, and the magnetron **12** is removed from the apparatus, after which the operation described hereinabove may be repeated.

Each element of the apparatus is composed of a non-magnetic material so that there is no hysteresis in the apparatus, and the conductivity thereof is constant. The apparatus has a constant resistance so that results are uniform, and may be quickly assembled and disassembled.

It is to be understood that the above-described arrangements are simply illustrative of the application of the principles of the invention. Numerous other arrangements may be readily devised by those skilled in the art which will embody the principles of the invention and fall within the spirit and scope thereof.

What is claimed is:

1. An apparatus for magnetizing magnetron magnets, which comprises a pair of copper sockets insulated electrically from one another, a base mounting the sockets, a pair of copper bus bars connected to the sockets, a pair of copper legs each having one end portion designed to fit into the sockets, a copper spanning yoke for connecting electrically the other ends of the legs, and non-magnetic means secured to the base for pressing the yoke against the legs and the legs against the sockets.

2. An apparatus for magnetizing magnetron magnets, which comprises a pair of copper terminals insulated from one another and having tapered sockets, a base supporting the terminals, a pair of non-magnetic bus bars connected to the terminals, a pair of copper legs each having one end portion tapered to fit into the sockets, a copper spanning yoke for connecting electrically the other ends of the legs, and non-magnetic means secured to the base for pressing the yoke against the legs and the legs into the sockets.

3. A magnetizing apparatus, which comprises a pair

of precisely spaced conductive copper blocks having conical openings lined with an alloy of copper and chromium, a pair of replaceable upright copper legs each of which has a conical end covered with an alloy of copper and chromium and also being provided with a boss on the opposite end, insulating coverings on the portions of the legs intermediate the ends thereof, a copper spanning bar having sockets for receiving in close-fitting engagement the bosses, a pair of pivotal yokes of non-magnetic material swingable over the ends of the bar, non-magnetic means carried by the yokes for pressing the bar against the legs and the legs against the conductive blocks, and means for applying a voltage across the blocks.

4. A magnetizing apparatus, which comprises a pair of precisely spaced electroconductive blocks having conical openings lined with an alloy of copper and chromium, a pair of replaceable upright copper legs each of which has a conical end covered with an alloy of copper and chromium and also being provided with a boss on the opposite end, electrically insulating coverings on the portions of the legs intermediate the ends thereof, a copper spanning bar having sockets for receiving the bosses, non-magnetic means for pressing the bar against the legs and the legs against the conductive blocks, and non-magnetic means for applying a voltage across the blocks.

5. A magnetizing apparatus, which comprises a base, a pair of non-magnetic electroconductive sockets mounted on the base and insulated therefrom, non-magnetic insulating means mounted on the sockets, a removable U-shaped non-magnetic electroconductive bar, and non-magnetic electroconductive means for electrically detachably connecting the arms of the bar within the sockets.

References Cited in the file of this patent

UNITED STATES PATENTS

534,802	Lemp	Feb. 26, 1895
2,202,884	Zuschlag	June 4, 1940
2,442,808	Granberry	June 8, 1948