May 10, 1927. 1,628,269

L. D. NELSON

BAG FILLING MACHINE

Original Filed March 20, 1924 3 Sheets-Sheet 1

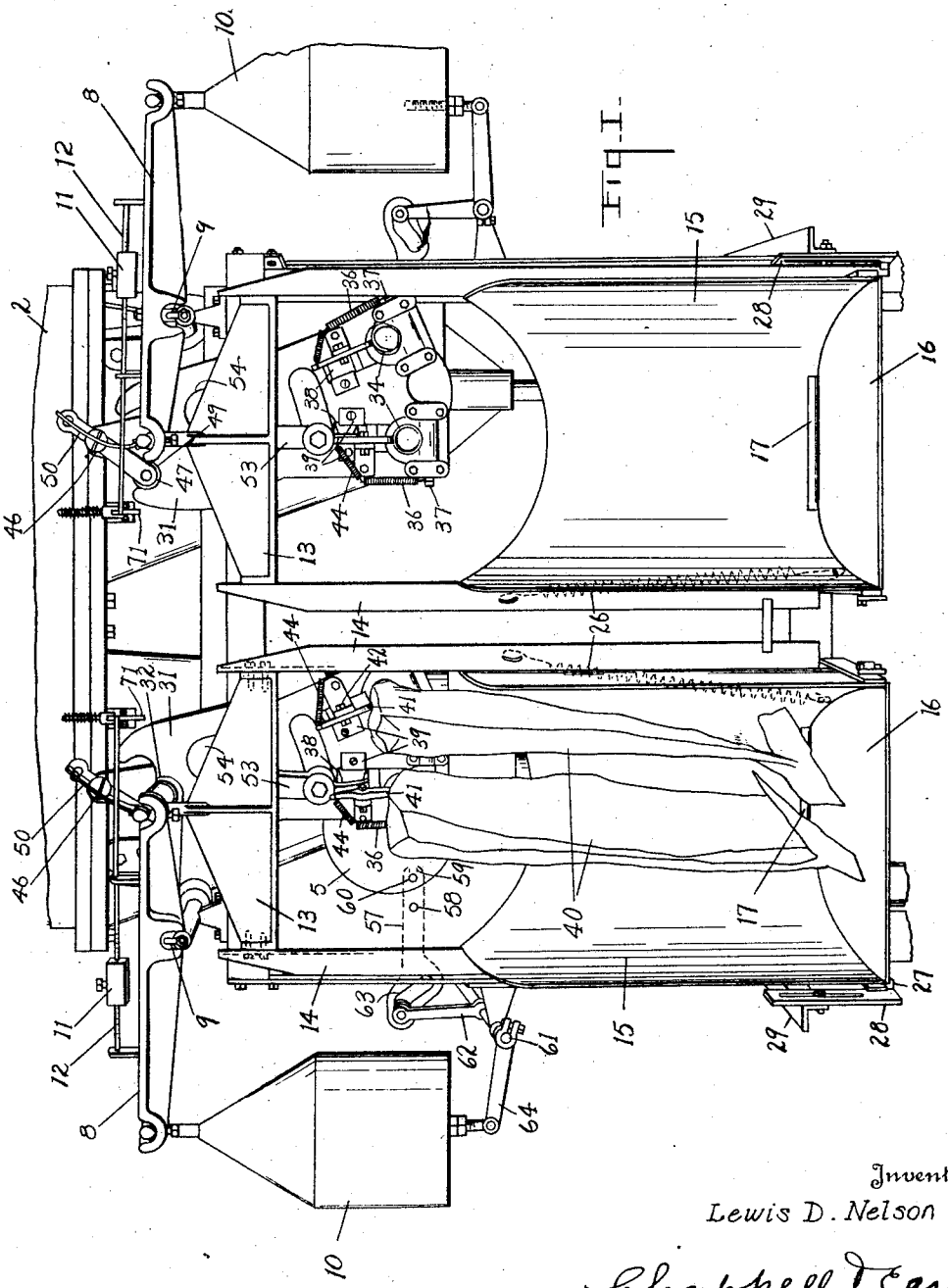

Fig. 1.

Inventor
Lewis D. Nelson

By Chappell & Earl

Attorneys

May 10, 1927. 1,628,269

L. D. NELSON

BAG FILLING MACHINE

Original Filed March 20, 1924 3 Sheets-Sheet 2

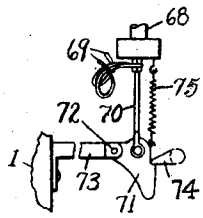

Fig. VII.

Fig. II.

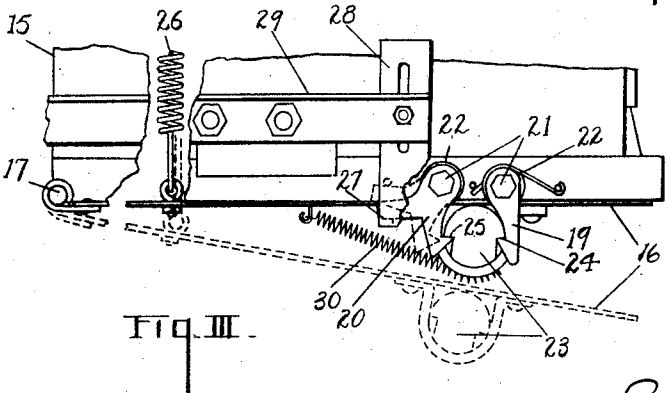

Fig. III.

Inventor
Lewis D. Nelson

By Chappell Dearl

Attorneys

May 10, 1927. 1,628,269

L. D. NELSON

BAG FILLING MACHINE

Original Filed March 20, 1924 3 Sheets-Sheet 3

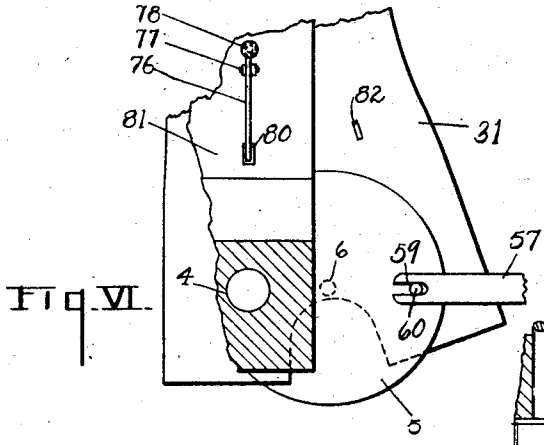

Fig. VI.

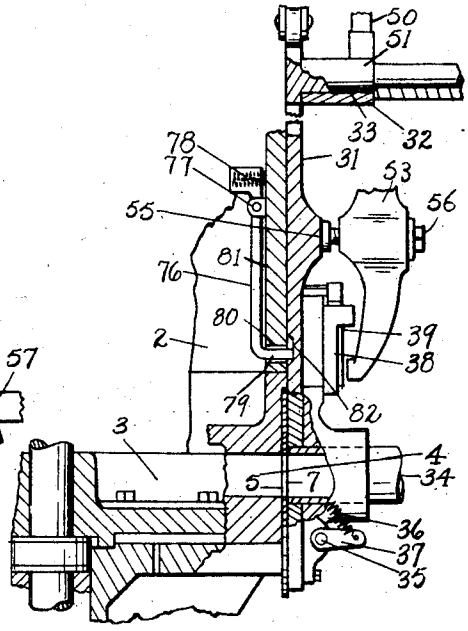

Fig. IV.

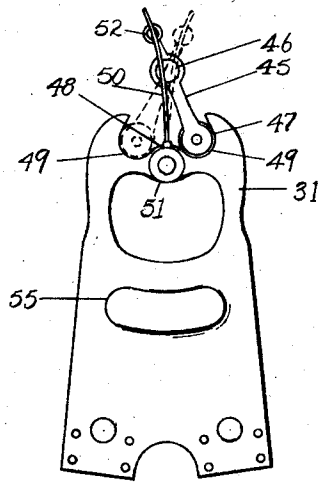

Fig. V.

Inventor
Lewis D. Nelson

By Chappell Earl

Attorneys

Patented May 10, 1927. 1,628,269

UNITED STATES PATENT OFFICE.

LEWIS D. NELSON, OF COLDWATER, MICHIGAN.

BAG-FILLING MACHINE.

Original application filed March 20, 1924, Serial No. 700,566. Divided and this application filed August 17, 1925. Serial No. 50,721.

This invention relates to improvements in bag filling machines.

My improvements are especially designed by me for the filling of bags with cement, lime and other heavy materials and I have illustrated the same as I have embodied them in a bag filling machine for handling cement, the present application being a division of my application for Letters Patent filed March 20, 1924, Serial No. 700,566.

The main objects of this invention are:

First, to provide an improved machine which is automatic in its operation, it only being required that the operator shall place the bags upon the feed spouts.

Second, to provide an improved bag filling machine of large capacity.

Objects pertaining to details and economies of construction and operation of my invention will definitely appear from the detailed description to follow.

I accomplish the objects of my invention by the devices and means described in the following specification. The invention is clearly defined and pointed out in the claims.

A structure embodying the features of my invention is clearly illustrated in the accompanying drawing forming a part of this application, in which:

Fig. I is a fragmentary front elevation of a bag filling machine embodying the features of my invention, the machine illustrated being a double unit machine.

Fig. II is a fragmentary front perspective view.

Fig. III is a fragmentary side elevation showing details of the platform support, the platform being shown in dropped position by dotted lines.

Fig. IV is a detail vertical section of the feed control means.

Fig. V is a fragmentary view showing details of the carrier actuating means.

Fig. VI is a fragmentary view showing details of the spout carrier and the valve and its operating connections.

Fig. VII is a detail view showing details of the switch control means.

In the drawing similar reference numerals indicate similar parts throughout the several views.

Referring to the drawing, I provide a supporting frame designated generally by the numeral 1. The details of this form no part of this invention, it being understood that it is of such character as to suitably support the associated parts. The structure shown in Fig. I is a double unit structure but as the units are duplicates a description of one will be sufficient.

The material is supplied to the hopper 2 by any suitable means. At the bottom of the hopper is an ejector 3 which is fully illustrated, described and claimed in my above mentioned original application.

The ejector is provided with a discharge opening 4 having a disk valve 5 pivoted at 6 and having a discharge opening 7 therein adapted to be brought into register with the discharge 4 of the feed mechanism. The valve is automatically operated by means which will be hereinafter described.

The machine is controlled by a weighing mechanism which in the structure illustrated comprises a scale beam 8 pivoted at 9 and provided with a weight 10 and also with an auxiliary weight 11 for accuracy in adjustment, the auxiliary weight being carried by the scale rod 12 mounted on the scale beam.

Suspended from the scale beam is a platform carrying frame comprising the head piece 13, uprights 14 at the ends thereof and a back wall 15 mounted on these uprights, the back wall being curved as shown. The platform 16 is pivoted at 17 so that its forward end may swing downwardly as shown by dotted lines in Fig. III. The platform is held in its erected position by means of the latches 19 and 20 mounted on the pivots 21 and provided with springs 22 by means of which the latches are urged to engaging position.

On the under side of the platform is a transversely disposed rod 23 having keepers 24 and 25 with which the latches 19 and 20 engage when the platform is in erected position. Springs 26 are connected to the frame and to the platform for returning the platform to its erected position after a filled bag has been discharged. When the platform moves downwardly the latch 20 comes into contact with the tripping lug 27 on the adjustable plate 28 carried by an arm 29 projecting from the frame, thereby disengaging the latch allowing the platform to drop. The rod 23 is supported for limited rotative movement thereby permitting it to become disengaged from the latch 19 when released by the latch 20. The spring 30 returns the rod to proper position to present

its keepers 24 and 25 to the latches when the platform is returned by the springs 26.

The scale beam also carries the spout carrier 31 which is pivoted on the inwardly projecting arm 32 of the scale beam at 33. The carrier overlaps and overhangs the valve 5 and is provided with a pair of spouts 34 mounted on the pivots 35 so that they may swing downward to discharge the filled bags. These spouts are returned to their erected position by the springs 36 connected to the carrier at one end and to the arms 37 on the pivots 35 at their other ends.

The sliding latches 38 are mounted on the carrier by means of the slide way 39 to engage the bases of the spouts when the spouts are in erected position. As the carrier is oscillated the spouts are alternately brought into register with the discharge opening 4.

The bags shown at 40 are of the valve or self-closing type especially designed to receive the spouts. The bags are retained upon the spouts by means of the bag holders 41 which are pivoted at 42 on the forwardly projecting arms 43 and held yieldingly in engaging position by the spring 44. The operator pushes the bag under the bag holders which are of such length that a push thereon tends to make the jaw grip the bag more firmly.

When, however, the latch 38 is released the spout drops downwardly thereby releasing the bag, and this is timed with the releasing of the platform so that the filled bag is ejected. The operator places an empty bag on a spout which is in non-filling position so that as soon as the bag is discharged the spouts are automatically shifted.

The carrier is automatically shifted or oscillated by means of the actuating lever 45 which is pivoted on the frame at 46 and provided with a roller 47 engaging in the yoke 48 formed in the upper end of the carrier. This yoke provides a pair of seats 49 on the opposite sides of the pivot of the yoke. The lever is actuated by a spring 50 one end of which is secured to the hub 51 of the carrier, see Figs. IV and V, and the other to a pin 52 projecting from the upper end of the lever 45.

When the scale beam is in its initial position this actuating spring is placed under stress as will be clear from Figs. I, II and V so that when the carrier is lowered by the lowering of the scale beam under load the lever is swung to the opposite end of the yoke, thereby actuating the carrier, this taking place as soon as the filled bag is discharged. This downward movement of the carrier also brings the latch 38 into engagement with the trip arm 53 which is mounted on the frame to project through an opening 54 in the carrier. This arm 53 also serves as a lateral support for the carrier 3 which is provided with a boss 55 with which the adjusting screw 56 slidably engages, that is, the screw has a bearing engagement with this boss. The latches 38 are alternately brought into coacting relation with this trip arm.

To time the actuation of the valve with the other parts the valve actuating lever 57 which is pivoted at 58 and has a slot 59 engaging a pin 60 on the valve is operated from a rockshaft 61 having an arm 62 thereon engaging the cam slot 63 in the lever 57. The arm 64 on the rockshaft is connected to the weight 10 so that when the weight moves forwardly under the rod on the scale beam, the arm 62 moves downwardly in the cam slot actuating the lever 57 to close the valve.

To accelerate or cause quick action of the parts, thereby closing the valve quickly and also causing quick movement of the connecting parts, I provide an electromagnet 65, the armature of which, not illustrated, is connected by the rod 66 to an arm 67 on the rockshaft 61. This electromagnet is in turn controlled from the switch designated generally by the numeral 68 connected by the wires 69 to the electromagnet. The switch illustrated is of the mercury type, it, however, being shown conventionally.

The switch actuating rod 70 is pivotally connected to the lever 71 which is pivoted at 72 on an arm 73 projecting from the frame. The scale rod 12 is provided with a tappet 74 adapted to engage this lever 71 on the downstroke of the rod, or when the scale beam is actuated by the weight thereon, thereby closing the switch and actuating the electromagnet as stated to accelerate the movement of the parts. The spring 75 yieldingly supports the trip lever 71 and allows the tappet to return to its initial position as shown in Fig. VII.

To lock the carrier in its actuated position, I provide a locking dog 76 which is pivoted at 77 and held yieldingly in engaging position by the coiled spring 78, the engaging end 79 of the dog projecting through a hole 80 in the frame-piece 81 to engage a recess-like keeper 82 in the carrier. As the carrier moves downwardly this locking dog is disengaged, the lower end of the keeper being inclined or beveled so that the dog is pushed rearwardly thereby releasing the carrier for its oscillating movement.

These various operations are timed so that all the operator is required to do is to place the bags on the spouts. As soon as the required weight of material has been discharged into the bag the weight of the filled bag actuates the scale, thereby engaging the spout supporting latch, and also when a predetermined point is reached the platform is released and the bag discharged.

When the parts reach the limit of their downward stroke the carrier actuating spring 50 under the power stored therein actuates or shifts the carrier. On the return movement the spring is again placed under stress of the power stored therein and the lever engaging one of the seats 49 of the carrier locks the carrier in its actuated position.

I have not attempted to illustrate and describe certain modifications and adaptations which I contemplate as I believe the disclosure made will enable those skilled in the art to embody or adapt my improvements as may be desired.

Having thus described my invention what I claim as new and desire to secure by Letters Patent is:

1. In a structure of the class described, the combination of a feed valve, a weighing mechanism including a scale beam, an oscillating carrier pivotally mounted on said scale beam, means for actuating said carrier controlled by the vertical movement thereof on said scale beam, spouts pivotally mounted on said carrier to be successively brought into register with said feed valve, means for normally holding said spouts in erected position, means for automatically releasing said spouts on the downward movement of the carrier, a pivoted platform carried by said scale beam, means for normally supporting said platform in erected position, means for releasing said platform on the downward movement of the scale beam, a dog for holding said carrier in its actuated position adapted to be disengaged by the downward movement of the carrier, and means for actuating said valve operatively associated with said scale beam.

2. In a structure of the class described, the combination of a feed valve, a weighing mechanism including a scale beam, an oscillating carrier pivotally mounted on said scale beam, means for actuating said carrier controlled by the vertical movement thereof on said scale beam, spouts pivotally mounted on said carrier to be successively brought into register with said feed valve, means for normally holding said spouts in erected position, means for automatically releasing said spouts on the downward movement of the carrier, a pivoted platform carried by said scale beam, means for normally supporting said platform in erected position, means for releasing said platform on the downward movement of the scale beam, and means for actuating said valve operatively associated with said scale beam.

3. In a structure of the class described, the combination of a feed valve, a weighing mechanism including a scale beam, an oscillating carrier pivotally mounted on said scale beam, means for actuating said carrier controlled by the vertical movement thereof on said scale beam, spouts pivotally mounted on said carrier to be successively brought into register with said feed valve, means for normally holding said spouts in erected position, means for automatically releasing said spouts on the downward movement of the carrier, a pivoted platform carried by said scale beam, means for normally supporting said platform in erected position, means for releasing said platform on the downward movement of the scale beam, an accelerating means including an electromagnet operatively connected to said scale beam, and a control switch for the electromagnet actuated by said scale beam.

4. In a structure of the class described, the combination of a weighing mechanism including a scale beam, an oscillating carrier pivotally mounted on said scale beam, means for actuating said carrier controlled by the vertical movement of the carrier, spouts pivotally mounted on said carrier to be successively brought into feeding position, means for normally holding said spouts in erected position, means for automatically releasing said spouts on the downward movement of the carrier, a pivoted platform carried by said scale beam, means for normally supporting said platform in erected position, means for releasing said platform on the downward movement of the scale beam, and a dog for holding said carrier in its actuated position adapted to be disengaged by the downward movement of the carrier.

5. In a structure of the class described, the combination of a weighing mechanism including a scale beam, an oscillating carrier pivotally mounted on said scale beam, means for actuating said carrier controlled by the vertical movement of the carrier, spouts pivotally mounted on said carrier to be successively brought into feeding position, means for normally holding said spouts in erected position, means for automatically releasing said spouts on the downward movement of the carrier, a pivoted platform carried by said scale beam, means for normally supporting said platform in erected position, and means for releasing said platform on the downward movement of the scale beam.

6. In a structure for the class described, the combination of a weighing mechanism including a scale beam, means for actuating said carrier controlled by the vertical movement of the carrier, spouts pivotally mounted on said carrier to be successively brought into feeding position, means for normally holding said spouts in erected position, means for automatically releasing said spouts on the downward movement of the carrier, a pivoted platform carried by said scale beam, means for normally supporting said platform in erected position, means for

releasing said platform on the downward movement of the scale beam, an accelerating means including an electromagnet operatively connected to said scale beam, and a control switch for the electromagnet actuated by said scale beam.

7. In a structure of the class described, the combination of a disc feed valve, a weighing mechanism including a scale beam, a carrier pivotally mounted on said scale beam to overlap said valve, means for oscillating said carrier controlled by the vertical movement thereof, spouts pivotally mounted on said carrier to be alternately brought into operative relation to said feed valve, latches on said carrier for locking said spouts in erected position, a supporting arm depending in front of and with which said carrier slidably engages, said arm being provided with a trip with which said latches are alternately brought into operative relation so that on the downward movement of the carrier the latches are released to free the spouts, springs for returning said spouts to erected position, and means for actuating said valve operatively associated with said scale beam.

8. In a structure of the class described, the combination of a weighing mechanism including a scale beam, a carrier pivotally mounted on said scale beam, means for oscillating said carrier controlled by the vertical movement thereof, spouts pivotally mounted on said carrier to be alternately brought into operative position, latches on said carrier for locking said spouts in erected position, a trip with which said latches are alternately brought into operative relation so that on the downward movement of the carrier the latches are released to free the spouts, and springs for returning said spouts to erected position.

9. In a structure of the class described, the combination of a disc valve, a weighing mechanism including a scale beam, an oscillating carrier pivotally mounted on said scale beam to overhang said valve, said carrier being conformed at its upper end to provide a yoke having seats on opposite sides of the carrier pivot, a pivotally mounted actuating lever coacting with said yoke to actuate said carrier as the lever is actuated and hold it in its actuated positions when said scale beam is in its initial position, a lever actuating spring carried by said carrier and connected to said lever so that the spring is placed under stress when the scale beam is in its initial position and on the actuating of the scale beam the lever is actuated, and spouts mounted on said carrier to be alternately brought into register with said feed valve.

10. In a structure of the class described, the combination of a weighing mechanism including a scale beam, said carrier being conformed at its upper end to provide a yoke having seats on opposite sides of the carrier pivot, a pivotally mounted actuating lever coacting with said yoke to actuate said carrier as the lever is actuated and hold it in its actuated positions when said scale beam is in its initial position, a lever actuating spring carried by said carrier and connected to said lever so that the spring is placed under stress when the scale beam is in its initial position and on the actuating of the scale beam the lever is actuated, and spouts mounted on said carrier to be alternately brought into operative position.

11. In a structure of the class described, the combination of a weighing mechanism, a carrier supported for vertical and oscillating movement by said weighing mechanism, said carrier being conformed at its upper end to provide a yoke, a pivotally mounted actuating lever coacting with said yoke to actuate said carrier as the lever is actuated, an actuating spring for said lever connected to said carrier so that it is placed under stress when the parts are in initial position and on the lowering of the carrier, the lever is actuated to oscillate the carrier, and spouts mounted on said carrier to be alternately brought into operative position.

12. In a structure of the class described, the combination of a weighing mechanism including a scale beam, a carrier pivotally mounted on said scale beam, means for automatically actuating said carrier upon the actuation of said scale beam, spouts mounted on said carrier to be successively brought into operative position, a platform frame carried by said scale beam, a platform pivotally mounted on said frame, a latch for supporting said platform in erected position, a trip for releasing said latch on the downward movement of said platform frame whereby the platform is released to discharge the filled bag from the spout, and a return spring for said platform.

13 In a structure of the class described, the combination of a weighing mechanism, an oscillating carrier supported by said weighing mechanism for vertical movement, means for oscillating said carrier controlled by the vertical movement thereof, spouts pivotally mounted on said carrier to be alternately brought into operative position, means for holding said spouts in erected position released by the vertical movement of said carrier, a tilting platform operatively associated with said weighing mechanism, means for holding said platform in its erected position adapted to be released upon the actuation of said weighing mechanism, and a dog for holding said carrier in its actuated positions adapted to be disengaged by the downward movement of the carrier.

14. In a structure of the class described, the combination of a weighing mechanism,

an oscillating carrier supported by said weighing mechanism for vertical movement, means for oscillating said carrier controlled by the vertical movement thereof, spouts pivotally mounted on said carrier to be alternately brought into operative position, means for holding said spouts in erected position released by the vertical movement of said carrier, a tilting platform operatively associated with said weighing mechanism, means for holding said platform in its erected position adapted to be released upon the actuation of said weighing mechanism, and bag holders operatively associated with said spouts when the spouts are in erected position.

15. In a structure of the class described, the combination of a weighing mechanism, a feed valve, an oscillating carrier supported by said weighing mechanism for vertical movement, means for oscillating said carrier controlled by the vertical movement thereof, spouts pivotally mounted on said carrier to be alternately brought into operative relation to said valve, means for holding said spouts in erected position released by the vertical movement of said carrier, a tilting platform operatively associated with said weighing mechanism, means for holding said platform in its erected position adapted to be released upon the actuation of said weighing mechanism, and means for actuating said valve operatively associated with said weighing mechanism.

16. In a structure of the class described, the combination of a weighing mechanism, a feed valve, an oscillating carrier supported by said weighing mechanism for vertical movement, means for oscillating said carrier controlled by the vertical movement thereof, spouts mounted on said carrier to be alternately brought into operative relation to said valve, and means for actuating said valve operatively associated with said weighing mechanism.

17. In a structure of the class described, the combination of a weighing mechanism, a feed valve, an oscillating carrier supported by said weighing mechanism for vertical movement, means for oscillating said carrier controlled by the vertical movement thereof, spouts mounted on said carrier to be alternately brought into operative relation to said valve, means for actuating said feed valve operatively associated with said weighing mechanism, and an electromechanical accelerating means for said weighing mechanism operatively connected thereto and provided with a switch controlled by a movable member of said weighing mechanism.

18. In a structure of the class described, the combination of a weighing mechanism, an oscillating carrier supported by said weighing mechanism for vertical movement, means for oscillating said carrier controlled by the vertical movement thereof, spouts pivotally mounted on said carrier to be alternately brought into operative position, means for holding said spouts in erected position released by the vertical movement of said carrier, a tilting platform operatively associated with said weighing mechanism, means for holding said platform in its erected position adapted to be released upon the actuation of said weighing mechanism, and an electromechanical accelerating means for said weighing mechanism operatively connected thereto and provided with a switch controlled by a movable member of said weighing mechanism.

19. In a structure of the class described, the combination of a weighing mechanism, an oscillating carrier supported by said weighing mechanism for vertical movement, means for oscillating said carrier controlled by the vertical movement thereof, spouts pivotally mounted on said carrier to be alternately brought into operative position, means for holding said spouts in erected position released by the vertical movement of said carrier, a tilting platform operatively associated with said weighing mechanism, and means for holding said platform in its erected position adapted to be released upon the actuation of said weighing mechanism.

20. In a structure of the class described, the combination of a weighing mechanism, an oscillating carrier supported by said weighing mechanism for vertical movement, means for oscillating said carrier controlled by the vertical movement thereof, spouts mounted on said carrier to be alternately brought into operative position, a tilting platform operatively associated with said weighing mechanism, means for holding said platform in its erected position adapted to be released upon the actuation of said weighing mechanism, and an electromechanical accelerating means for said weighing mechanism operatively connected thereto and provided with a switch controlled by a movable member of said weighing mechanism.

21. In a structure of the class described, the combination of a weighing mechanism, an oscillating carrier supported by said weighing mechanism for vertical movement, means for oscillating said carrier controlled by the vertical movement thereof, spouts mounted on said carrier to be alternately brought into operative position, and an electromechanical accelerating means for said weighing mechanism operatively connected thereto and provided with a switch controlled by a movable member of said weighing mechanism.

22. In a structure of the class described, the combination of a weighing mechanism,

an oscillating carrier supported by said weighing mechanism for vertical movement, means for oscillating said carrier controlled by the vertical movement thereof, spouts mounted on said carrier to be alternately brought into operative position, a tilting platform operatively associated with said weighing mechanism, and means for holding said platform in its erected position adapted to be released upon the actuation of said weighing mechanism.

23. In a structure of the class described, the combination of a weighing mechanism, a feed means, an oscillating carrier supported by said weighing mechanism for vertical movement, means for oscillating said carrier controlled by the vertical movement thereof, and spouts mounted on said carrier to be alternately brought into operative position relative to said feed means.

24. In a structure of the class described, the combination of a weighing mechanism, a tilting platform operatively associated with said weighing mechanism, a pivoted discharge spout adapted to deliver to receptacles resting on said platform, means for holding said spout in erected position, means for releasing said spout operatively associated with said weighing mechanism, and means for releasing said platform operatively associated with said weighing mechanism.

25. In a structure of the class described, the combination of a weighing mechanism, a tilting spout, a tilting platform for supporting receptacles to be charged by said spout, and means operatively associated with said weighing mechanism for controlling the tilting of said spout and platform whereby they are tilted to discharge the filled receptacle.

26. In a structure of the class described, the combination of a weighing mechanism including a scale beam, an oscillating carrier pivotally mounted on said scale beam, means for actuating said carrier controlled by the vertical movement of the carrier, spouts pivotally mounted on said carrier to be successively brought into feeding position, and means for normally holding said spouts in erected position adapted to be automatically released on the downward movement of the carrier.

27. In a structure of the class described, the combination of a weighing mechanism, a feed means, an oscillating carrier supported by said weighing mechanism for vertical and oscillating movements, spouts pivotally mounted on said carrier to be alternately brought to operative position relative to said feed means, and means for supporting said spouts in erected position adapted to be released by the vertical movement of the carrier.

28. In a structure of the class described, the combination of a weighing mechanism, a tilting spout, a bag holder operatively associated with said spout, and means for releasing the spout operatively associated with said weighing mechanism whereby the spout is tilted to discharge the filled bag.

29. In a structure of the class described, the combination of a weighing mechanism, a dumping platform operatively associated with said weighing mechanism, a tilting discharge spout, and means operatively associated with said weighing mechanism for controlling the tilting of said spout for facilitating the discharge of the filled receptacle, said dumping platform co-acting with said spout in supporting the receptacle as it is being filled, said dumping platform being actuated upon the releasing of said receptacle from said spout.

30. In a structure of the class described, the combination of a weighing mechanism, a tilting spout, a receptacle holding means operatively associated with said spout, and means operatively associated with said weighing mechanism for controlling the tilting of said spout for facilitating the discharge of the filled receptacle, said receptacle holding means being released by the tilting of said spout.

31. In a structure of the class described, the combination of a weighing mechanism, a feed means, an oscillating carrier supported by said weighing mechanism for vertical movement, means for oscillating said carrier controlled by the vertical movement thereof, spouts tiltingly mounted on said carrier to be alternately brought into operative position relative to said feed means, means for supporting said spouts in erected position adapted to be disengaged by the downward movement of the carrier, and a dumping platform operatively associated with said weighing mechanism.

32. In a structure of the class described, the combination of a weighing mechanism, a feed means, an oscillating carrier supported by said weighing mechanism for vertical movement, means for oscillating said carrier controlled by the vertical movement thereof, spouts mounted on said carrier to be alternately brought into operative position relative to said feed means, means for supporting said spouts in erected position adapted to be disengaged by the downward movement of the carrier, and a dumping platform operatively associated with said weighing mechanism.

33. In a structure of the class described, the combination of a weighing mechanism a feed means, an oscillating carrier supported by said weighing mechanism for vertical movement, means for oscillating said carrier controlled by the vertical movement

thereof, and spouts tiltingly mounted on said carrier to be alternately brought into operative position relative to said feed means.

34. In a structure of the class described, the combination of a weighing mechanism, a feed means, a carrier supported for vertical and oscillating movement by said weighing mechanism, and means for oscillating said carrier comprising a yoke on said carrier, a pivotally mounted actuating lever coacting with said yoke, means for actuating said lever on the downward movement of the carrier, and spouts mounted on said carrier to be alternately brought to operative position relative to said feed means.

35. In a structure of the class described, the combination of a weighing mechanism, a feed means, an oscillating carrier supported by said weighing mechanism for vertical movement, means for oscillating said carrier controlled by the vertical movement thereof, and spouts mounted on said carrier to be alternately brought to operative position relative to said feed means.

In witness whereof I have hereunto set my hand.

LEWIS D. NELSON.