(12) INTERNATIONAL APPLICATION PUBLISHED UNDER THE PATENT COOPERATION TREATY (PCT)

(19) World Intellectual Property Organization
International Bureau

(43) International Publication Date
8 January 2015 (08.01.2015)

WIPO | PCT

(10) International Publication Number
WO 2015/001561 A1

(51) International Patent Classification:
A61M 15/00 (2006.01) *B65D 83/52* (2006.01)
A61M 11/02 (2006.01) *B65D 83/62* (2006.01)
B65D 83/06 (2006.01) *B65D 83/64* (2006.01)
B65D 83/16 (2006.01) *B05B 1/02* (2006.01)
B65D 83/28 (2006.01) *B05B 11/06* (2006.01)

(21) International Application Number:
PCT/IL2014/050600

(22) International Filing Date:
3 July 2014 (03.07.2014)

(25) Filing Language: English

(26) Publication Language: English

(30) Priority Data:
61/842,446 3 July 2013 (03.07.2013) US

(71) Applicant: **MEway Pharma LTD** [IL/IL]; 1 Oley Bavel, 46344 Herzliya (IL).

(72) Inventors: **EILAT, Eran**; 1 Oley Bavel St., 46344 Herzliya (IL). **ALTMAN, Joshua**; 31 Yehuda Hanassi St., 69391 Tel Aviv (IL).

(74) Agents: **SWARTZ, Yair** et al.; Dr Eyal Bressler Ltd, Lazrom House, 11 Tuval st, 52522 Ramat- Gan (IL).

(81) Designated States *(unless otherwise indicated, for every kind of national protection available)*: AE, AG, AL, AM, AO, AT, AU, AZ, BA, BB, BG, BH, BN, BR, BW, BY, BZ, CA, CH, CL, CN, CO, CR, CU, CZ, DE, DK, DM, DO, DZ, EC, EE, EG, ES, FI, GB, GD, GE, GH, GM, GT, HN, HR, HU, ID, IL, IN, IR, IS, JP, KE, KG, KN, KP, KR, KZ, LA, LC, LK, LR, LS, LT, LU, LY, MA, MD, ME, MG, MK, MN, MW, MX, MY, MZ, NA, NG, NI, NO, NZ, OM, PA, PE, PG, PH, PL, PT, QA, RO, RS, RU, RW, SA, SC, SD, SE, SG, SK, SL, SM, ST, SV, SY, TH, TJ, TM, TN, TR, TT, TZ, UA, UG, US, UZ, VC, VN, ZA, ZM, ZW.

(84) Designated States *(unless otherwise indicated, for every kind of regional protection available)*: ARIPO (BW, GH, GM, KE, LR, LS, MW, MZ, NA, RW, SD, SL, SZ, TZ, UG, ZM, ZW), Eurasian (AM, AZ, BY, KG, KZ, RU, TJ, TM), European (AL, AT, BE, BG, CH, CY, CZ, DE, DK, EE, ES, FI, FR, GB, GR, HR, HU, IE, IS, IT, LT, LU, LV, MC, MK, MT, NL, NO, PL, PT, RO, RS, SE, SI, SK, SM, TR), OAPI (BF, BJ, CF, CG, CI, CM, GA, GN, GQ, GW, KM, ML, MR, NE, SN, TD, TG).

Declarations under Rule 4.17:

— *as to applicant's entitlement to apply for and be granted a patent (Rule 4.17(ii))*

Published:

— *with international search report (Art. 21(3))*

(54) Title: METERED DOSE INHALER AND METHODS THEREOF

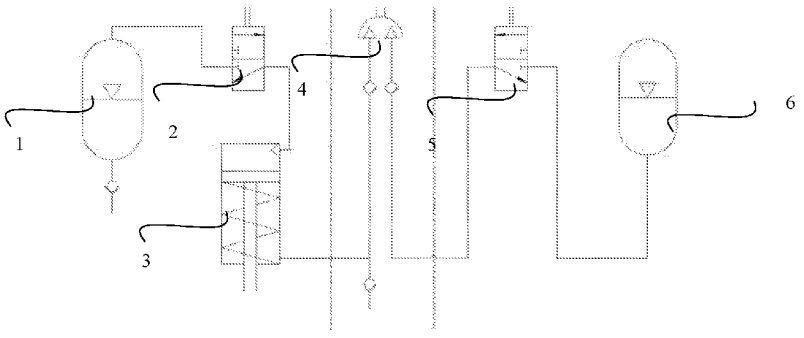

FIG. 1A

(57) Abstract: A process and a metered dose inhaler, comprising: an air actuator comprising at least one inlet of liquefied gas (LG), at least one air outlet, at least one first LG-expanding volume and at least one second air-containing volume, the first and second volumes are effectively separated by means of a LG-blocking member; a container with an LG source; said container is in a fluid connection with said LG-expanding volume via the at least one LG inlet; The air actuator is facilitating a metered dose airflow by allowing the expansion of said LG in said at least one LG-expanding volume from its condensed liquid phase to its expanded gas phase. The expansion of said LG facilitates the compression of the air within said at least one air-containing volume, such that a metered dose LG-free air flow is inhalable via at least one air outlet.

WO 2015/001561 A1

METERED DOSE INHALER AND METHODS THEREOF

FIELD OF THE INVENTION

The present invention is related to an air pressure-operated metered dose inhaler. More particularly, the invention pertains to an air pressure-operated metered dose inhaler which comprises an air actuator adapted for releasing a flow of compressed air at such time as a predetermined liquefied gas (LG) pressure has been reached, and to methods thereof.

BACKGROUND OF THE INVENTION

Among the many devices which are adapted to deliver gas, fluid or further medicaments, to the lung, metered inhalers are widely used. Several patents describe metered inhalers for delivering gas, fluid or medicaments.

US patent application No. 4017007 discloses an air pressure-operated dispenser for spraying a single dose of a fluent material of liquid or powder form. The dispenser has a single dose container having a compressed air inlet opening and a closable discharge orifice and means for closing the discharge orifice in a non-dispensing position of the dispenser. An air-compressing piston pump having a compressed air outlet from a compression space thereof is further provided on the dispenser at the junction of the inlet opening and the compressed air outlet. The inlet opening of the single dose container is joined to the compressed air outlet of the compression space and valve means is provided on the piston pump for releasing a flow of compressed air.

US patent No. 5893515 discloses a device for generating a spray of mist or fine droplets includes a spinning rotor within a mist chamber. The rotor has inner walls which taper conically outwardly from the open bottom of the rotor to a hole near the top of the rotor. Liquid is pumped by a finger actuated pump from a cartridge module into a bowl surrounding the bottom end of the rotor. The spray is created as the liquid is formed into droplets as it passes through the hole in the rotor under centrifugal force.

PCT patent application No. 2004011068 discloses a medicament dispenser device for use in the delivery of a combination medicament product. The dispenser comprises a first medicament container for containing a first medicament component, a first release means for releasing the contents of said first medicament container, at least one medicament container for containing at least one further medicament component, and at least one release means for

releasing the contents of at least one medicament. The first medicament component is kept separate from the at least one further medicament component until the point of release thereof for delivery in combination. The dispenser additionally comprises an electronic control system for controlling the release of contents from the medicament container.

EP patent application No. 1689474 discloses an inhaler which comprises a compressed gas, in a first chamber which is in communication with an equalization chamber having pressure lower than the pressure of the gas in the first compressed chamber and having a drug storage chamber which is detachably coupled to the equalization chamber operable such that a portion of the compressed gas from the equalization chamber fluidizes and aerosolizes the drug to produce a drug cloud and which can then be injected into a spacer where it can be inhaled by a user.

PCT application No. 1999021659 discloses a device and a method of reducing the droplet size of a composition sprayed from an aerosol spray device comprising a compressed gas propellant, which method comprises imparting a unipolar charge to the liquid droplets by double layer charging during the spraying of the liquid droplets from the aerosol spray device, the unipolar charge being at a level such that the droplets have a charge to mass ratio of at least +/- 1 x 10<-4> C/kg.

The above-described devices are electrically powered, less portable or provide long treatment time. It therefore remains a long felt and unmet need to provide novel means and methods for an inhaler device which generates and delivers a dose of gas, fluid or a mixture thereof in a more effective and short term manner.

SUMMARY OF THE INVENTION

It is an object of the present invention to disclose a novel metered dose inhaler. This inhaler comprises an air actuator comprising at least one inlet of liquefied gas (LG), at least one air outlet, at least one first LG-expanding volume and at least one second air-containing volume, the first and second volumes are effectively separated by means of an LG-blocking member, a container with an LG source; the container is in a fluid connection with the LG-expanding volume *via* the at least one LG inlet; wherein the air actuator is facilitating a metered dose airflow by allowing the expansion of the LG in the at least one LG-expanding volume from its condensed liquid phase to its expanded gas phase, and further wherein the expansion of the

LG facilitates the compression of the air within the at least one air-containing volume, such that a metered dose LG-free air flow is inhalable *via* the at least one air outlet.

It is another object of the present invention to disclose a metered dose inhaler which comprises (a) a liquefied gas (LG)source, (b) a volume adapted to contain LG, the volume fluidly connected to the LG source, (c) an air-containing volume, (d) an air outlet fluidly connected to the air-containing volume and, (e) an air actuator separating the LG-containing volume from the air-containing volume; the air actuator is adapted to release a flow of compressed air through the air outlet at such time as a predetermined LG pressure has been reached in the volume adapted to contain LG; wherein the LG and the air remain separate at all times; further wherein the compressed air is released at a predetermined pressure.

It is another object of the present invention to provide the inhaler as defined in any of the in any of the above, wherein the air actuator is selected from a group consisting of a piston pump, a turbine, a rotor, an inflatable membrane and a combination thereof.

It is another object of the present invention to provide the inhaler as defined in any of the above, wherein the inhaler additionally comprising a valve means in communication with the air actuator; the valve means comprising at least one control valve having a single state and at least two directing valves configured to identify and control the actuator movement, position and direction.

It is another object of the present invention to provide the inhaler as defined in any of the above, wherein the at least two directing valves are based on ferromagnetic mechanism.

It is another object of the present invention to provide the inhaler as defined in any of the above, wherein the inhaler additionally comprising a valve in a fluid connection with the LG source.

It is another object of the present invention to provide the inhaler as defined in any of the above, wherein additionally comprising an energy source selected from the group consisting of: electric motor, electric linear actuator, electromagnetic solenoid based actuator, spring operated mechanism, hydraulic pump, compressed gas (CG), flywheel, steam engine, carnot machine, stirling cycle and a combination thereof.

It is another object of the present invention to provide the inhaler as defined in any of the above, wherein the air actuator is adapted for controlling the flow of the compressed air after build-up of a predetermined pressure.

It is another object of the present invention to provide the inhaler as defined in any of the above, wherein the inhaler additionally comprising an air inlet.

It is another object of the present invention to provide the inhaler as defined in any of the above, wherein the inhaler additionally comprising an LG outlet.

It is another object of the present invention to provide the inhaler as defined in any of the above, wherein the LG-expanding volume contains a first compressed LG compressed between about 20 and about 200 psig, and the air containing volume contains compressed air compressed between about 3 and about 10 psig.

It is another object of the present invention to provide the inhaler as defined in any of the above, wherein the membrane, when inflated by the LG source, compresses air flow *via* the air outlet.

It is another object of the present invention to provide the inhaler as defined in any of the above, wherein the membrane is configured as a diaphragm-like shape or a condom-like shape.

It is another object of the present invention to provide the inhaler as defined in any of the above, wherein the inhaler additionally comprising a mist nozzle in a fluid connection with the air outlet.

It is another object of the present invention to provide the inhaler as defined in any of the above, wherein the LG is selected from the group consisting of liquefied petroleum gas (LPG), propane, butane and a combination thereof.

It is another object of the present invention to provide the inhaler as defined in any of the above, wherein the inhaler additionally comprising a medicament metering mechanism comprising a medicament chamber and a medicament metering valve, the valve is in a fluid connection with the medicament chamber.

It is another object of the present invention to provide the inhaler as defined in any of the above, wherein the medicament is in a form selected from the group consisting of solid form, gas form, liquid form and a combination thereof.

It is another object of the present invention to provide the inhaler as defined in any of the above, wherein the medicament is administrated in a manner selected from the group consisting of: systemic administration *via* the patient's lungs, topical administration and a combination thereof.

It is another object of the present invention to provide the inhaler as defined in any of the above, wherein the inhaler is configured for spraying one or more members of a group

consisting of gas materials, liquid materials, fine particles, powder materials and a mixture thereof.

It is another object of the present invention to provide the inhaler as defined in any of the above, wherein the inhaler is portable and handheld.

It is another object of the present invention to provide the inhaler as defined in any of the above, wherein the inhaler is used for treating asthma, chronic obstructive pulmonary disease (COPD) and other respiratory diseases and conditions.

It is another object of the present invention to disclose a nozzles system for dispensing a consecutively dose of a medicament in the form of a mist, comprising:

a. an inhaler comprising an air actuator comprising at least one inlet of liquefied gas (LG), at least one air outlet, at least one first LG-expending volume and at least one second air-containing volume, the first and second volumes are effectively separated by means of an LG-blocking member;
b. a container with a LG source; the container is in a fluid connection with the LG-expending volume *via* the at least one LG inlet and a spring means in communication with the air actuator;
c. at least two nozzles in fluid communication with the air outlet;

wherein the nozzles are venturi nozzles arrange in a predetermined angle such that the droplet size of a medication dispersed from the inhaler is in a range of about 1μ to about 5μ;

It is another object of the present invention to provide the nozzles system according as defined in any of the above, wherein nozzles are configured to disperse at least 2.5 ml of the medication in approximately 2 minutes.

It is another object of the present invention to provide the nozzles system according as defined in any of the above, wherein the at least two nozzles are interconnected in a vertically or to each other.

It is another object of the present invention to provide the nozzles system according as defined in any of the above, wherein the nozzle type is selected from the group consisting of laskin nozzle, annular flow high velocity , colliding streams nozzle, additive energy nozzles, swirl nozzle and a combination thereof.

It is another object of the present invention to provide the nozzles system according as defined in any of the above, wherein the nozzles are with a diameter configured to disperse a droplets size less than 5μ vs the released dose or medication.

It is another object of the present invention to provide the nozzles system according as defined in any of the above, wherein the nozzles are configured with a diameter of about 0.5mm to provide a droplets distribution of more than 70% of the medication.

It is another object of the present invention to provide the nozzles system according as defined in any of the above, wherein the nozzles are with a diameter of about 0.5mmto disperse a droplets size is in a range of about 2μ to about 3μ

It is another object of the present invention to provide the nozzles system according as defined in any of the above, wherein the at least two nozzles interconnected in a vertical angle generate a mist of about 80% droplets smaller than 3μ.

It is another object of the present invention to provide the nozzles system according as defined in any of the above, wherein the at least two nozzles interconnected in a vertical angle generate a mist of about 90% droplets smaller than 5μ.

It is another object of the present invention to disclose a method of introducing a dose from a metered dose inhaler, comprising steps of: providing a metered dose inhaler with an air actuator; providing at least one inlet of liquefied gas (LG), at least one air outlet, at least one first LG-expanding volume and at least one second air-containing volume, providing the first and second volumes separated by means of an LG-blocking member; a container with an LG source; providing the container in a fluid connection with the LG-expanding volume *via* the at least one LG inlet and, then releasing the LG directly to the actuator;

wherein the method of releasing the LG directly to the actuator further comprises steps of facilitating metered dose airflow by an air actuator thereby allowing the expansion of the LG in the LG-expanding volume from its condensed liquid phase to its expanded gas phase, and further wherein the method additionally comprising steps of facilitating the compression of the air within the air-containing volume by the expansion of the LG, such that a metered dose LG-free air flow is inhaled *via* the air outlet.

It is another object of the present invention to provide the method as defined in any of the above, wherein the method additionally comprising step of selecting the air actuator from a group consisting of a piston pump, a rotor, a turbine, an inflatable membrane and a combination thereof.

It is another object of the present invention to provide the method as defined in any of the above, wherein the method additionally comprising steps of configuring the membrane as a diaphragm or condom.

It is another object of the present invention to provide the method as defined in any of the above, wherein the method additionally comprising step of providing a mist nozzle in a fluid connection with the inhaler.

It is another object of the present invention to provide the method as defined in any of the above, wherein the method additionally comprising step of selecting the LG from a group consisting of liquefied petroleum gas (LPG), propane , butane and a mixture thereof.

It is another object of the present invention to provide the method as defined in any of the above, wherein the method additionally comprising step of providing a medicament selected from a group consisting of solid form, gas form, liquid form and a mixture thereof.

It is another object of the present invention to provide the method as defined in any of the above, wherein the method additionally comprising step of configuring the inhaler for spraying at least one dose form selected from the group consisting of a gas material, a flow material, fine particles, a liquid material, a powder material and a mixture thereof.

It is another object of the present invention to provide the method as defined in any of the above, wherein the method additionally comprising step of providing the inhaler as a portable and handheld device.

It is another object of the present invention to provide the method as defined in any of the above, wherein the method additionally comprising step of introducing the inhaler to the topical system or the systemic system *via* the patient's lungs.

It is another object of the present invention to disclose a method of treating respiration disorders in a patient which comprises use by the patient of a metered dose inhaler of the present invention.

It is another object of the present invention to disclose a device operative in a method of dispersing a dose, comprising steps of: providing a metered dose inhaler with an air actuator comprising at least one inlet of liquefied gas (LG), at least one air outlet, at least one first LG-expanding volume and at least one second air-containing volume, the first and second volumes are effectively separated by means of an LG-blocking member; providing a container with an LG source; the container is in a fluid connection with the LG-expanding volume *via* the at least one LG inlet; releasing the LG directly to the actuator ;

wherein the step of releasing the LG directly to the actuator is followed by an additional step of facilitating a metered dose airflow by the air actuator, thereby allowing the expansion of the LG in the LG-expanding volume from its condensed liquid phase to its expanded gas phase, and further wherein the step is followed by an additional step of facilitating the compression of the air within the air-containing volume by the expansion of the LG, such that a metered dose LG-free air flow is inhaled *via* the air outlet.

It is another object of the present invention to disclose a metered dose inhaler for improving medicament's alveolar deposition comprising: at least one inlet of liquefied gas (LG) communicating with at least one first volume for LG-expansion; at least one second volume for containing a medicament, the second volume in in fluid connection with at least one medicament outlet; an air actuator configured for moving air and the medicament towards patient's respiratory tract; and a container with a liquefied LG source, the container is in fluid connection with the first volume, where the LG is allowed to gasify, *via* the at least one LG inlet; wherein the air actuator comprises an LG-blocking member separating the first volume where LG is in liquid phase and the second volume where the LG is in it gas phase; and wherein the LG-blocking member moveable towards the medicament outlet by means of a pressure exerted by the LG-phase transition, thereby emitting effective measure of the medicament.

It is another object of the present invention to provide the inhaler as defined in any of the above, wherein the air actuator is selected from a group consisting of a piston pump, a turbine, a rotor, an inflatable membrane and a combination thereof.

It is another object of the present invention to provide the inhaler as defined in any of the above, wherein the outlet is provided with an orifice having a diameter of about 0.2mm to about 0.9mm, operably configured to emit effective measure of the medicament having average particles size equal to or less than 5μm.

It is another object of the present invention to provide the inhaler as defined in any of the above, wherein the LG is with a pressure operably configured to emit effective measure of the medicament having average particles size equal to or less than 5μm.

It is another object of the present invention to provide the inhaler as defined in any of the above, wherein the second volume is with a volume operably configured to emit effective measure of the medicament having average particles size equal to or less than 5μm.

It is another object of the present invention to provide the inhaler as defined in any of the above, wherein the LG blocking member is with a speed of movement operably configured to emit high medicament quantity having average particles size equal to or less than 5µm.

It is another object of the present invention to disclose a method of improving medicament's alveolar deposition characterized by the following steps:

providing a metered dose inhaler for improving medicament's alveolar deposition with at least one inlet of liquefied gas (LG) communicating with at least one first volume for LG-expansion; at least one second volume for containing a medicament, the second volume in in fluid connection with at least one medicament outlet; an air actuator configured for moving air and the medicament towards patient's respiratory tract; and a container with a liquefied LG source, the container is in fluid connection with the first volume, where the LG is allowed to gasify, *via* the at least one LG inlet;

releasing the liquefied LG directly to the actuator, thereby gasifying the LG and actuating the actuator; and facilitating the flow of an effective measure of the medicament towards the alveoli *via* patient's respiratory tract.

It is another object of the present invention to provide the method as defined in any of the above, wherein the method additionally comprising step of reducing, by means of the medicament dispensing nozzle, the average particle size of the medicament outflow to value being equal to or less than 5µm, followed by a step of facilitating the flow of the medicament.

It is another object of the present invention to provide the method as defined in any of the above, wherein the method additionally comprising step of selecting the air actuator from a group consisting of a piston pump, a rotor, a turbine ,an inflatable membrane and a combination thereof.

It is another object of the present invention to disclose a standard of care protocol for increasing both *(i)* deposition of a medicament and *(ii)* kinetics per internal surface area of the alveoli to the respiratory tract by means of a metered dose inhaler, the protocol characterized by providing a metered dose inhaler for improving medicament's alveolar deposition with at least one inlet of liquefied gas (LG) communicating with at least one first volume for LG-expansion; at least one second volume for containing a medicament, the second volume in in fluid connection with at least one medicament outlet;

an air actuator configured for moving air and the medicament towards patient's respiratory tract; and

a container with a liquefied LG source, the container is in fluid connection with the first volume, where the LG is allowed to gasify, *via* the at least one LG inlet; and facilitating the flow towards the respiratory tract of a patient, by the air actuator, an LG-free meter-dose medicament comprising a medicament, wherein the inhaled medicament is of an average particles size equal to or less than 5μm, thereby absorbing more than 50% of the medicament in the alveoli.

It is another object of the present invention to provide the standard of care protocol as defined in any of the above, wherein the standard of care protocol additionally comprising step of selecting the air actuator from a group consisting of a piston pump, a rotor, a turbine ,an inflatable membrane and a combination thereof.

BRIEF DESCRIPTION OF THE DRAWINGS

In the following description of the preferred embodiments, reference is made to the accompanying drawings that form a part hereof, and in which are shown by way of illustration specific embodiments in which the invention may be practiced. It is understood that other embodiments may be utilized and structural changes may be made without departing from the scope of the present invention. The present invention may be practiced according to the claims without some or all of these specific details. For the purpose of clarity, technical material that is known in the technical fields related to the invention has not been described in detail so that the present invention is not unnecessarily obscured. In the accompanying drawing:

FIGS. 1A-C present a schematic view of metered dose inhaler system of the present invention;

FIG. 2 presents a schematic view of the metered dose inhaler of the present invention comprising a piston pump as an actuator;

FIGs. 3A-B present a schematic view of the metered dose inhaler of the present invention comprising an inflatable membrane as an actuator;

FIG. 4 and 5 presents a schematic view of the metered dose inhaler of the present invention comprising turbine-compressor means as an actuator;

FIG. 6 presents a graph of the droplets size vs. the droplets percentage amount of the metered dose inhaler of the present invention;

FIG. 7 presents a cross section view of the venturi nozzle system of the metered dose inhaler of the present invention;

FIG. 8 presents a graph of the droplets size vs. the droplets velocity of the metered dose inhaler of the present invention;

FIG. 9 presents a cross section of the metered dose inhaler of the present invention comprising a venturi system for dispersing medication; and,

FIGS. 10-11 present graphs of a medication droplets distribution of the inhaler comprising a dual nozzle, of the present invention.

DETAILED DESCRIPTION OF THE PREFERRED EMBODIMENTS

The present invention have been defined specifically to provide device, means and method for an air pressure-operated inhaler for spraying at least one dose form, comprising: a gaseous propellant, actuator means adapted to release a flow of compressed air after a predetermined liquefied gas (LG) pressure has been reached, and, an air outlet. The actuator means operated by the activated liquefied gas (LG) pressure in order to compress air *via* the air outlet. The actuator means builds up a pressure on the air delivery side for causing metered dose airflow.

Reference is now made to **Figures 1a-c** which illustrate a schematic view of metered dose inhaler system, comprising: an air actuator comprising at least one inlet of liquefied gas (LG), at least one air outlet, at least one first LG-expanding volume and at least one second air-containing volume. The first and second volumes are effectively separated by means of an LG-blocking member. The inhaler further comprises a container with LG source. The container is in a fluid connection with LG-expanding volume *via* at least one LG inlet. The air actuator is facilitating the metered dose airflow by allowing the expansion of the LG in at least one LG-expanding volume from its condensed liquid phase to its expanded gas phase. Furthermore the expansion of the LG facilitates the compression of the air within the at least one air-containing volume, such that a metered dose LG-free air flow is inhalable *via* the at least one air outlet.

The present invention further provides an air pressure-operated inhaler for spraying at least one dose form, comprising: (a) a liquefied gas (LG) source 1; (b) a volume adapted to contain LG, the volume is fluidly connected to the LG source, (c) an air-containing volume,(d)at least one air outlet fluidly connected to air-containing volume and, (e) actuator means 3 separating the LG-containing volume from the air-containing volume. The actuator means is adapted to release a flow of compressed air through the air outlet at such time as a predetermined LG pressure has been reached in the volume adapted to contain LG.

The LG and the air remain separate at all times. Furthermore the compressed air is released at a predetermined pressure. The airflow released from the inhaler outlet depended upon differential pressure gauges between the one LG-expanding volume and the air-containing volume separated by means of an LG-blocking member.

In another embodiment of the present invention the inhaler comprises an orifice having a diameter for emitting effective measure of about 0.1ml to about 3ml of medicament in less than about 6 minutes.

The LG-expanding volume is adapted for containing a compressed LG at a first pressure. The air containing volume may be in a selective communication with LG-expanding volume. The air containing volume is adapted for containing a compressed air at a second pressure less than the first pressure. Both of the volumes are cooperating so as to yield a second pressure of the compressed air within the air containing volume.

The LG-expanding volume contains a compressed LG compressed between about 20 to about 200 psig, and the air containing volume contains compressed air compressed between about 3 to about 10 psig.

As used herein the term **"about"** denotes ± 25% of the defined amount or measure or value.

Furthermore, a differential pressure gauge is further created between the outlet and inlet ports, each connected to one of the volume portions whose pressure is to be monitored.

The inhaler may further comprise a system or mechanism for delivering a medicament, the system may comprise an additionally medicament chamber 6 for loading a medicament and a medicament metering valve 5 for releasing the medicament from the chamber. The medicament metering valve is in fluid connection with the medicament chamber. The medicament metering valve is in charged on delivering a specific amount of medicament to the patient's lungs. The medicament may be delivered in a form of a short burst of aerosolized medicine that is inhaled by the patient.

In another embodiment of the present invention, the inhaler is further configured with an LG-blocking member to prevent contamination between the air and/or medicament within the air containing volume and the LG within LG-expanding volume. The LG-blocking member may be an integral part of the actuator or an independent unit such as slidable rod-like for separating the two volumes and for better sealing.

The inhaler of the present invention may further comprise a mist nozzle, such that the compressed LG pushes a predetermined amount of a medicament through a nozzle generating

an aerosol for inhalation. The medicament may be further admixed with the compressed air creating a mist to be dispersed from the the mist nozzle. The mist nozzle may comprise a plurality of apertures having different diameter for controlling the particles size diameter of a dispersed medicament.

Figure 1c further illustrates the inhaler system comprising valve means 7a-7f designated herein in a predefined arrangement adjacent to the inhaler LG inlet having high pressure LG supplied directly to the valve so that when at least one of valve is opened in response to system determinations, the gas at high pressure can be substantially immediately delivered at a steady state of flow and pressure to the inhaler unit to nearly or substantially instantaneously begin nebulization producing the proper distribution range and of particle sizes at a desired density. The valve means further comprising at least one control valve 7d,7f and at least three directing valves 7a,7b,7c. The control valve 7d comprises a single state and may further comprise an idle state and an automatic (auto) state for activating the inhaler. The directing valves 7a,7b,7c control and further monitor the actuator movement in the axial direction whilst LG is released by the LG-directing valve 7c to the LG-expanding volume and further forcing the actuator to downward position . The directing valves 7b,7a are based upon ferromagnetic mechanism such that when the actuator is forced to a downward position valve 7b pulls down the actuator and when the actuator reaches to valve 7a the actuator is released back to its rest position . The valve means further comprising a medication metering valve 7e which controls the medication release from the medication container 15 to a nozzles system 16.

The present invention further provides a device operative in a method of dispersing a dose, comprising steps of providing a metered dose inhaler with an air actuator comprising at least one inlet of liquefied gas (LG), at least one air outlet, at least one first LG-expanding volume and at least one second air-containing volume. The first and second volumes are effectively separated by means of an LG-blocking member; providing a container with an LG source.

The container is in a fluid connection with the LG-expanding volume *via* at least one LG inlet, releasing the LG directly to the actuator, wherein the step of releasing the LG directly to the actuator additionally comprising step of facilitating metered dose airflow by air actuator thereby allowing the expansion of the LG in the LG-expanding volume from its condensed liquid phase to its expanded gas phase, and further wherein the method additionally comprising step of facilitating the compression of the air within the air-containing volume by the expansion of the LG, such that a metered dose LG-free air flow is inhaled *via* the air outlet.

In another embodiment of the present invention, the LG-blocking member is moveable towards the medicament outlet by means of a pressure exerted by the LG-phase transition, thereby emitting effective measure of a medicament.

The term "**effective measure**" of a medicament refers hereinafter to a medicament dose to be delivered towards patient's respirator tracks, wherein the dose is sufficient for curing the patient according to a predefined treatment protocol. It is well within the scope of the invention, where effective measure ranges from 1 microgram to 1 gram, It is further in the scope of the invention, where effective measure of the medicaments is provided when characterized by an average particles size of less than about 5μm. Additional or alternatively, it is in the scope of the invention, where effective measure of the medicaments is characterized by a homogeneous medicament, i.e., one or more medicaments introduced to patient's respiratory tract by air carrier, and not another carrier, such as a carbon-containing liquefied gas (carbon dioxide, butane, propane etc.). Additional or alternatively, it is in the scope of the invention, where effective measure of the medicaments is a minimal dose useful for providing enhanced medicament absorption and kinetics per internal surface area of patient's alveoli. Additional or alternatively, it is in the scope of the invention, where effective measure of the medicaments is characterized by an average particles size (APS) μm, wherein the inhaled medicament is sized equal or less the APS to absorbed more than 50% per internal surface area in the alveoli. According to an embodiment of the invention the average particles size is in a range 0.75 μm≤ APS ≤ 5.0 μm.

In another embodiment of the present invention, the air outlet may be provided with an orifice having a diameter of about 0.2mm to about 0.9mm. The air outlet may be provided with an orifice operably configured to emit effective measure of the medicament having average particles size between one or more of the following rangers: 0.5-7.5 μm, 0.5-2.5 μm, 2.5-5.0 μm or 5.0-7.5μm. The inhaler may further provide droplets distribution having a diameter equal to or less than 5μm.

Additional or alternatively, the LG is with a pressure operably configured to emit effective measure of the medicament having average particles size equal to or less than 5μm. Additional or alternatively, the second air-containing volume is with a volume operably configured to emit effective measure of the medicament having average particles size equal to or less than 5μm. Additional or alternatively, the LG blocking member is with a speed of movement operably

configured to emit high medicament quantity having average particles size equal to or less than 5µm.

The present invention further provides a method of improving medicament's alveolar deposition characterized by the following steps: providing a metered dose inhaler for improving medicament's alveolar deposition with at least one inlet of liquefied gas (LG) communicating with at least one first volume for LG-expansion; at least one second volume for containing a medicament, the second volume in in fluid connection with at least one medicament outlet; an air actuator configured for moving air and the medicament towards patient's respiratory tract; and a container with a liquefied LG source, the container is in fluid connection with the first volume, where the LG is allowed to gasify, *via* the at least one LG inlet;

The method additionally comprising the step of releasing the liquefied LG directly to the actuator, thereby gasifying the LG and actuating the actuator and facilitating the flow of an effective measure of the medicament towards the alveoli *via* patient's respiratory tract.

The method additionally comprising step of reducing, by means of the medicament dispensing nozzle, the average particle size of the medicament outflow to a diameter value being equal to or less than 5µm, followed by a step of facilitating the flow of the medicament.

It is another object of the present invention to provide a standard of care protocol for increasing both *(i)* deposition of a medicament and, *(ii)* kinetics per internal surface area of the alveoli *via* the respiratory tract by means of a metered dose inhaler. The protocol is characterized by providing a metered dose inhaler for improving medicament's alveolar deposition with at least one inlet of the liquefied gas (LG) communicating with at least one first volume for LG-expansion; at least one second volume for containing a medicament, the second volume in in fluid connection with at least one medicament outlet; an air actuator configured for moving air and the medicament towards patient's respiratory tract; and a container with a liquefied LG source, the container is in fluid connection with the first volume, where the LG is allowed to gasify, *via* the at least one LG inlet; and facilitating the flow towards the respiratory tract of a patient, by the air actuator, an LG-free meter-dose medicament comprising a medicament, wherein the inhaled medicament is of an average particles size equal to or less than 5µm, thereby absorbing more than 50% of the medicament in the alveoli. The standard of care protocol additionally comprising step of selecting the air actuator from a group consisting of a piston pump, a rotor, a turbine ,an inflatable membrane, a spring and a combination thereof.

According to one embodiment of the present invention, the medicament may be selected from granular matter, a drug sized to form fine particles, powder, sol, gel, sol-gel, glass, encapsulated matter, milled composition or any combination thereof. Alternatively or additionally, the medicament may be utilized in a liquid phase. In such a case, the fluid is selected in a non-limiting manner from water miscible compositions, water immiscible compositions, emulsions, extracts, dispersions, suspensions, vasiculated solutions, aggregated phases or any combination thereof. It is according to another embodiment of the present invention wherein the fluid or medicament is selected in a non-limiting manner from at least one of the group of Braochodilators, especially sympatic mimetics, alfa antagonists, anti cholinergics; nasal decongestants, such as pseudoehedrines, ephedrines; steroids; anti histamines; anti prostaglandins, alternative or homeopathic medicaments; vaso constrictors; local anesthetics; mast cell stabilizers; antibiotics, such as biocides, fungicides etc; pleasant odor; pheromones; hormone treatments, such as ADH, insulin, growth hormones; vapors, humidifiers; drying compositions; hot or cold vapors; hyper-, iso- or hypotonic vapors or any combination thereof, or decongestants, essential oils, volatile compounds, etheric oils, terepenes, terpanols and either water miscible or water-immiscible extracts, especially oils or extracts .

The inhaler can be adapted for treating asthma, chronic obstructive pulmonary disease (COPD) and other respiratory diseases and conditions. The medicament may be in a form selected from a group consisting of solid form, gas form, liquid form and combination thereof.

According to one embodiment of the present invention, the inhaler may further be adapted to deliver medicament for treating chronic inflammatory diseases such as asthma, as presented in **Table 1** below;:

Category	**Purpose**	**Medicament types**
Long-term asthma control medicaments	Taken regularly to control chronic symptoms and prevent asthma attacks — the most important type of treatment for most people with asthma	Inhaled corticosteroids Leukotriene modifiers Long-acting beta agonists (LABAs) Theophylline Combination inhalers that contain both a corticosteroid and a LABA
Quick-relief	Taken as needed for rapid, short-term	Short-acting beta agonists

medicaments (rescue medicaments)	relief of symptoms — used to prevent or treat an asthma attack	such as albuterol Ipratropium (Atrovent) Oral and intravenous corticosteroids (for serious asthma attacks)
Medicaments for allergy-induced asthma	Taken regularly or as needed to reduce your body's sensitivity to a particular allergy-causing substance (allergen)	Allergy shots (immunotherapy) Omalizumab (Xolair)

Other medicaments may further be adapted , selected from the group consisting of: Bronchodilators Short-acting bronchodilators (including: Anticholinergics (such as ipratropium),Beta2-agonists (such as albuterol and levalbuterol)), a combination of the two Long-acting bronchodilators, (including: Anticholinergics (such as tiotropium),Beta2-agonists (such as salmeterol, formoterol, and arformoterol)),Phosphodiesterase-4 (PDE4) inhibitors, Corticosteroids (such as prednisone) ,Expectorants, (such as guaifenesin (Mucinex)), Methylxanthines.

Other medicaments may further be adapted for treating Chronic obstructive pulmonary disease (COPD), selected from the group consisting of: Aclidinium inhalation, aclidinium/formoterol inhalation, AM211, AZD1981(CRTh2 receptor antagonist) , AZD 2115 (MABA), AZD2423 (CCR2b antagonist), AZD3199(iLABA), AZD5069(CXCR2), AZD5423, AZD3199, AZD5069(CXCR2), AZD5423

(inhaled SEGRA), AZD8683(muscarinic antagonist), BCT197, BI-137882, BIO-11006, Dulera mometasone/formoterol, EP-101(LAMA), EP-102(LAMA/LABA), EPI-12323, formoterol/ fluticasone fixed-dose combination(inhalation), GSK256066(inhaled PDE4 inhibitor), GSK573719(muscarinic acetylcholine antagonist), GSK573719/ vilanterol (muscarinic acetylcholine antagonist/long-acting beta2 agonist), GSK610677 (inhaled p38 kinase inhibitor), GSK961081(muscarinic antagonist/beta2 agonist), GSK1325756(chemokine receptorantagonist-2), GSK2245840

(SIRT1 activator), Ilaris canakinumab, LAS 100977(LABA), levosalbutamol /ipratropiuminhalation solution, losmapimod(oral p38 kinase inhibitor), MEDI-2338(anti-IL-18 mAb), MEDI-8968(anti-IL-1R), MK-7123(navarixin), MN-166(ibudilast), MN-221(bedoradrine), NVA237

(glycopyrrolate inhalation), O-desulfated heparin intravenous, olodaterol, olodaterol/tiotropium bromide, paclitaxel-loaded stent, PF-03715455, PH-797804, Prochymal remestemcel-L, PT001(glycopyrrolate inhalationaerosol), PT003(glycopyrrolate/formoterol inhalation aerosol), PT005(formoterol inhalation aerosol), PUR118, QMF149 (indacaterol/mometasone), QVA149(glycopyrrolate/indacaterol inhalation), Relovair vilanterol/fluticasone furoate, RV568, TD-4208(LAMA), tetomilast, vilanterol(long-acting beta2 agonist), Veldona interferon-alpha, and a combination thereof.

The inhaler of the present invention may be adapted for topical administration or for systemic absorption of drugs delivered for the local treatment of respiratory disease. The inhaler is further efficient and reproducible systemic delivery is lung deposition.

The inhaler of the present invention may be used with therapeutic agents that are antiasthmatics, including bronchodilators and anti-inflammatories, particularly of steroid type, having a local therapeutic action in the lungs and/or a systemic therapeutic action after absorption in the blood.

The inhaler of the present invention are also suitable for dispensing any medicaments which may be administered in aerosol formulations and useful in inhalation therapy e.g.; anti-allergics, e.g. cromoglycate (e.g. as the sodium salt), ketotifen or nedocromil (e.g. as sodium salt); anti-inflammatory steroids, e.g. beclomethasone (e.g. as dipropionate), fluticasone (e.g. as propionate), flunisolide, budesonide, rofleponide, mometasone (e.g as furoate), ciclesonide, triamcinolone acetonide; anticholinergics, e.g. ipratropium (e.g. as bromide), tiotropium, atropine or oxitropium and salts thereof. It will be clear to a person skilled in the art that, where appropriate, the medicaments may be used in the form of salts, (e.g. as alkali metal or amine salts or as acid addition salts) or as esters (e.g. lower alkyl esters) or as solvates (e.g. hydrates) to optimize the activity and/or stability of the medicament and/or to minimise the solubility of the medicament in the propellant. Medicament may be used in the form of racemate or in the form of a pure isomer e.g. R-salmeterol or S-salmeterol.

In another embodiment of the present invention, the LG is released to LG-containing volume using an LG-release valve means 2 which may further control the LG- pressure delivered to the inhaler. The LG source is provided as a gaseous propellant having a vapor pressure.

In another embodiment of the present invention, the air pressure-operated inhaler of the present invention is provided with at least two configurations. One configuration is before activating the LG source therefore the air actuator is in a resting position. The second

configuration is when activating the LG valve and releasing LG for compressing the air actuator for releasing air flow from the inhaler air outlet.

In another embodiment of the present invention, the inhaler can be used as a dispensing system for creating an aerosol mist of liquid particles.

In another embodiment of the present invention, the inhaler is suitable for infants, small children and elderly patients or patients with nerve or muscle weakness.

In another embodiment of the present invention, the inhaler is a portable device and is effective for short and long treatment. Furthermore, the inhaler provides an improved lung deposition. The inhaler is constructed such that the actuator allows the delivery of a sufficient amount of a compressed air and directs the compressed air flow in such manner toward the air outlet such that an entire mass of a latter is released from the inhaler.

In another embodiment of the present invention, the LG is preferably Liquefied petroleum gas, also known as LPG, GPL, LP Gas, liquid petroleum gas or simply propane or butane. The LPG is a flammable mixture of hydrocarbon gases used as an aerosol propellant.

In another embodiment of the present invention, the inhaler the present invention may comprise a compressed or pressurized gas.

The LG is further selected from the group consisting of: 1,1,1,2-tetrafluoroethane (HFA 134a) or 1 ,1 ,1 ,2,3,3,3-heptafluoropropane (HFA 227) or a mixture thereof. In alternative propellants such as carbon dioxide or other which are gaseous at room temperature and standard atmospheric pressure may be used.

The inhaler of the present invention may further adapted for releasing a therapeutic agent or nontherapeutic agent such as fragrances, paints, stains, dyes, inks, lacquers, urethanes or lubricants.

Reference is now made to **Figures 2 and 3** which illustrate a schematic view of a metered dose inhaler, comprising: an air actuator comprising at least one inlet of liquefied gas (LG), at least one air outlet, at least one first LG-expanding volume and at least one second air-containing volume. The first and second volumes are effectively separated by means of an LG-blocking member. The LG source in the present invention may be a separated LG container. The container is in a fluid connection with LG-expanding volume *via* at least one LG inlet.

The air actuator is adapted to facilitated a metered dose airflow by allowing the expansion of the LG in the at least one LG-expanding volume from its condensed liquid phase to its expanded gas phase. Furthermore the expansion of the LG facilitates the compression of the

air within the at least one air-containing volume, such that a metered dose LG-free air flow is inhalable *via* the at least one air outlet

The actuator means presented in **Fig. 2** is a piston pump or plunger 15 which acts as a recoil spring-like. The piston is an air-compressing piston which further configured as a barrier between the LG-expanding volume 16 and the air-containing volume 17. The compressed LG applies a force upon the piston 15 toward the air-containing volume17 to release air flow. Furthermore air may be compressed to apply a force upon the piston toward the LG volume to disposed LG flow. The piston allows the LG and the air to remain separately at all times such that the compressed air is released at a predetermined pressure via the air outlet 12. The piston15 is coupled to the air-containing volume 17such that that the piston is biased toward air-containing volume. The piston further controls the flow rate of the pressurized air.

The inhaler of the present invention comprises at least one air outlet 12 for releasing compressed air and air inlet 11 for air entrance to the air-containing volume 17. When air is inserted to the air-containing volume the piston 15 is in its unpressurized configuration meaning inactivating position. Furthermore, when air is released from the air-containing volume 17, the piston is in its pressurized configuration, meaning activating position.

The inhaler of the present invention further comprises at least one LG inlet 14 for LG entrance to the LG-volume portion 16 within the inhaler for compressing the piston to its pressurized configuration. The inhaler may further comprise an LG outlet 13 for LG exit when the piston is in its unpressurised configuration and, in parallel air is inserted into the inhaler through the air inlet. The opening and closing of the LG inlet, air inlet and LG and air outlets are controlled by the movement of the actuator.

In another embodiment of the present invention, the LG container comprises propane, butane and a mixture thereof.

The inhaler of the present invention is configured for spraying at least one dose selected from a group consisting of a gas material, fine particles, liquid material, powder form and a combination thereof.

In another embodiment of the present invention, the inhaler may be a portable device and/or a handheld device.

Reference is now made to **Figures 3a-b** which illustrate a schematic view of the metered dose inhaler container of the present invention, comprising: an air actuator such as a membrane 21 comprising at least one inlet of liquefied gas (LG) 23, at least one air outlet 22, at least one first

LG-expanding volume and at least one second air-containing volume. The first and second volumes are effectively separated by means of an LG-blocking member.

The inhaler further comprises a container with LG source. The container is in a fluid connection with LG-expanding volume *via* at least one LG inlet. The inhaler may further comprise an LG outlet 24 for LG exit when the membrane is in its deflated configuration and, in parallel air is inserted into the inhaler through the air inlet 25.

The air actuator is facilitating a metered dose airflow by allowing the expansion of the LG in the at least one LG-expanding volume from its condensed liquid phase to its expanded gas phase. Furthermore the expansion of the LG facilitates the compression of the air within the at least one air-containing volume, such that a metered dose LG-free air flow is inhalable *via* the at least one air outlet

The air actuator is an inflatable membrane 20, adapted to release a flow of compressed air through the air outlet at such time as a predetermined LG pressure has been reached in the volume adapted to contain LG.

The membrane is provided in two configurations, inflated configuration 21b and deflated configuration 21a. The inflatable membrane is further configured to provide a barrier between air-containing volume and the LG volume portion. The inflated membrane further allows the LG and the air to remain separately at all times such that the compressed air is released at a predetermined pressure. The membrane is inflated by activated LG pressure in order to compress air *via* the air outlet 22. The membrane is an expandable flexible elastic member.

In another embodiment of the present invention, the membrane is configured as a diaphragm-like shape or condom-like shape, composed of an elastic resilient material, whereby the slit of the membrane will open at a given excess pressure in the compression air containing volume.

Figure 3a further illustrate the inhaler in a deflated configuration meaning unpressurized configuration. Figure 43b illustrated the inflatable configuration meaning pressurized configuration.

Reference is now made to **Figures 4** and **5** which illustrate a schematic view of the metered dose inhaler container of the present invention, comprising: an air actuator 30a-b comprising at least one inlet of liquefied gas (LG), at least one air outlet 31, at least one first LG-expanding volume and at least one second air-containing volume.

In another embodiment of the present invention, the first and second volumes may be effectively separated by means of an LG-blocking member.

The inhaler further comprises a container with LG. The container is in a fluid connection with LG-expanding volume *via* at least one LG inlet 33.

The air actuator is facilitating a metered dose airflow by allowing the expansion of the LG in the at least one LG-expanding volume from its condensed liquid phase to its expanded gas phase. Furthermore the expansion of the LG facilitates the compression of the air within the at least one air-containing volume, such that a metered dose LG-free air flow is inhalable *via* the at least one air outlet

The air actuator is a turbine-compressor, impeller or a rotor- compressor 30a-b, adapted to release a flow of compressed air through the air outlet at such time as a predetermined LG pressure has been reached in the LG-expanding volume.

The rotor is operated by pressurized LG in order to compress air flow *via* the air outlet 31. As Fig. 4 illustrates, the inhaler comprising two rotors 30a and 30b, which are fixedly connected to an axle 37 such that the angular velocity of the axle is such as the angular velocity of the two rotors. The inhaler may further comprise an LG outlet 34 for LG exit when the second rotor 30b is in its spinning configuration and, in parallel air is inserted into the inhaler through the air inlet 32.

In another embodiment of the present invention the inhaler may comprise at least one energy source which further may replace the LG source for compressing the actuator.

The energy source is selected from the group consisting of: electric motor, electric linear actuator, electromagnetic solenoid based actuator, spring operated mechanism, hydraulic pump, compressed gas – CG, flywheel, heat engine of sorts (such as, steam engine, carnot machines, stirling cycle) and a combination thereof. **Figure 5** further illustrates an impeller housing 41 comprising an energy source such as a motor or engine 45 fixedly connected to a rotor actuator 44 via an axle 43 such that the angular velocity of the axle is such as the angular velocity of the rotor and the motor . In another embodiment of the present invention, the turbine acts as a rotary mechanical device that extracts energy from a gas flow and converts it into useful work energy therefore to release air from the inhaler. The turbine illustrated is a turbo-machine having at least one moving part, a rotor assembly, which is a shaft or drum with blades attached. The moving gas or fluid acts on the blades so that they move and impart rotational energy to the rotor. A working gas or fluid contains potential energy and kinetic

energy . The gas or fluid may be compressible or incompressible. Impulse turbines change the direction of flow of a high velocity fluid or gas jet. The resulting impulse spins the turbine and leaves the fluid flow with diminished kinetic energy. There is no pressure change of the fluid or gas in the turbine blades, as in the case of a steam or gas turbine, all the pressure drop takes place in the stationary blades (the nozzles). Before reaching the turbine, the fluid's pressure head is changed to velocity head by accelerating the fluid with a nozzle. Impulse turbines do not require a pressure casement around the rotor since the fluid jet is created by the nozzle prior to reaching the blading on the rotor. Reaction turbines develop torque by reacting to the gas or fluid's pressure or mass. The pressure of the gas or fluid changes as it passes through the turbine rotor blades. A pressure casement is needed to contain the working fluid as it acts on the turbine stage(s) or the turbine must be fully immersed in the gas or fluid flow .The casing contains and directs the working fluid and, for water turbines, maintains the suction imparted by the draft tube. For compressible working fluids, multiple turbine stages mat be used to harness the expanding gas efficiently.

Reference is now made to **Figure 6** which illustrates a Gaussian curve of the droplets diameter of a medication dispersed from the inhaler of the present invention vs. the particles percentage amount . As illustrated, the inhaler may provide more that 50% droplets from the medication droplets population having a 2mμ diameter. Furthermore, the inhaler may further provide more than 75% droplets from the medication droplets population having a 3mμ diameter.

Reference is now made to **Figures 7**a-b which further illustrate the inhaler of the present invention comprising a venturi nozzle system 100 having an air inlet 120, a medication inlet 110 and a medication- air mixture outlet 130. The venturi nozzle system is designated for the medication rate of flow comparing to the air rate of flow and further for decrease the medication droplet size or medication particle size. The medication particle size dispersed from the inhaler of the present invention is proportional to the air velocity due to the shear forces and surface tension balance on each droplet.

The nozzles system 100 of the present invention is configured to dispense an effective measure of a medicament in the form of a mist. The system comprises an inhaler comprising an air actuator comprising at least one inlet of liquefied gas (LG), at least one air outlet, at least one first LG-expending volume and at least one second air-containing volume, the first and second volumes are effectively separated by means of an LG-blocking member, a container with a LG source. The container is in a fluid connection with the LG-expending volume *via* at least one

LG inlet , valve means in communication with the air actuator and at least two nozzles in fluid communication with the inhaler's air outlet.

Figure 7a further illustrates a classic venturi nozzles system 100 comprising an air inlet 120, a medication inlet 110 and a medication- air mixture outlet 130. The venturi nozzles system is designated for the medication rate of flow comparing to the air rate of flow and further for decrease the medication droplet size or medication particle size. The medication particle size dispersed from the inhaler of the present invention is proportional to the air velocity due to the shear forces and surface tension balance on each droplet.

Figure 7b further illustrates a cross section of the inhaler of the present invention comprising venturi nozzles in a predefined arrangement. The venturi nozzle is based upon a push and pulls mechanism. The inhaler comprises an air inlet 160 for delivering air flow , a medication inlet 170 ,a medication reservoir 150 and an air-medication mixture outlet 140 for delivering the fluid or medication droplets. The air inlet diameter is configured to provide a pressure difference such that the downstream pressure may further empty the inner cavity of the liquid reservoir and prevent unnecessary residuals resulting from low pressure or any fluid adherent within the inhaler. The venturi nozzle, low pressure mixing chamber and the air-containing volume are configured such that at standard temperature and pressure (STP) a differential pressure results in no medication that is drawn upward through the primary suction line for nebulization and discharged through the inhaler outlet until a negative inspiratory pressure is created from inhalation by the subject. Furthermore, the venturi nozzle may be horizontally oriented when in use.

It is another embodiment of the present invention,,at least one nozzle is configured with a diameter of about 0.2mm to about 0.9mm to provide a droplets distribution of more than 70% of a medication.

It is another embodiment of the present invention, at least one nozzle is with a diameter of about 0.5mm to disperse a droplets size is in a range of about 2μ to about 3μ.

Preferably, the overall cross sectional area of the nozzle outlets is 25 to 500 square micrometers.

As **Figure 7b** demonstrates, the air within the air inlet flow via constricted section with a reduced diameter, the reduction in diameter causes an increase in the fluid flow speed thus the velocity of the fluid increases as the cross sectional area decreases, with the static pressure correspondingly decreasing resulting a fluid suction. Thereby ,an increase in the speed of the fluid occurs simultaneously with a decrease in pressure or a decrease in the fluid's potential

energy (e.g Venturi effect).Furthermore, when the fluid such as a medication, flows through the nozzle tube that narrows to a smaller diameter, the partial restriction causes a higher pressure at the inlet than that at the narrow end. This pressure difference causes the fluid to accelerate toward the low pressure narrow section, in which it thus maintains a higher speed. The direct relationship between pressure difference and fluid speeds may further allow to determine the volumetric flow rate.

In another embodiment of the present invention, in order to provide a negative pressure, thus sucking in all of the fluid, the liquid reservoir is further connected to an additional narrow tube which further configured to provide additional pressure from the back side of the liquid reservoir. The additional pressure enables and accelerates the reservoir emptying from the remained liquid droplets.

The venturi nozzles system is designated for the medication rate of flow comparing to the air rate of flow and further for decreasing the medication droplet size or medication particle size. The medication particle size dispersed from the nozzles system of the present invention is proportional to the air velocity due to the shear forces and surface tension balance on each droplet.

The formulation below demonstrates the calculation of flow rate using and orifice and/or venturri nozzle for incompressible flow, based on the Bernoulli principle:

$$\frac{p_1}{\rho} + \frac{v_1^2}{2} + g\ z_1 = \frac{p_2}{\rho} + \frac{v_2^2}{2} + g\ z_2 + \frac{\Delta p_{1\sim 2}}{\rho}$$

where is:

p - pressure

ρ - density

V - velocity

g - gravitational constant (9.81 m/s2)

z - geodetic height

Assumption that pressure lost is negligible (pressure drop is obvious and included with coefficient of discharge which is introduced bellow):

$$\Delta p_{1,2} = 0$$

and:

$$gz_1 = gz_2$$

and if velocities substituted with flow rate:

$$V_1 = \frac{4Q}{\pi D_1^2} V_2 = \frac{4Q}{\pi D_2^2}$$

where is: Q - volumetric flow rate

D - diameter

Pressure drop through the orifice resulting from the increase of velocity which may be calculated as follows:

$$\frac{p_1 - p_2}{\rho} = \frac{1}{2}\left(\frac{16Q^2}{\pi^2 D_2^4} - \frac{16Q^2}{\pi^2 D_1^4}\right)$$

or:

$$\frac{2(p_1 - p_2)}{\rho} = \frac{16Q^2}{\pi^2}\left(\frac{1}{D_2^4} - \frac{1}{D_1^4}\right)$$

Expressing flow rate from the previous equation leads to:

$$Q = \sqrt{\frac{1}{1 - \left(\frac{D_2}{D_1}\right)^4}} \frac{\pi D_2^2}{4} \sqrt{\frac{2(p_1 - p_2)}{\rho}}$$

Additional values are calculated using following equations:

Mass flow:

$$G = \rho Q$$

Velocities:

$$V_1 = \frac{4Q}{\pi D_1^2} V_2 = \frac{4Q}{\pi D_2^2}$$

Reference is now made to **Figure 8** which illustrates a graph of the droplets diameter vs. the velocity of the medication dispersed from the metered dose inhaler of the present invention. The droplets size is determined according to relevant ration of at least one inlet and outlet in the inhaler. Thereby, the droplets size is determined according the diameter of the air inlet, the medication inlet and the nozzle outlet. As figure 8 illustrates, a droplets diameter is exponentially decrease at a rate proportional to the velocity, thereby the droplets diameter consequently follow exponential decay. For example, droplets having a diameter of about 4μ may be obtained from the inhaler in a velocity of about 15m/s. Droplets having a diameter of about 2μ may be obtained from the inhaler in a velocity of about 20m/s.

Reference is now made to **Figure 9** which illustrates a cross section of the metered dose inhaler of the present invention comprising a venturi nozzle which is a based upon a push and pull mechanism. The meter dose inhaler comprises an air inlet 230 for delivering air flow , a medication inlet 220 ,a medication reservoir 240 and an air-medication mixture outlet 210 for delivering the fluid or medication droplets. The air inlet diameter is configured to provide a pressure difference such that the downstream pressure may further empty the inner cavity of the liquid reservoir and prevent unnecessary residuals resulting from low pressure or any fluid adherent within the inhaler. As figure 9 demonstrates, the air within the air inlet flow via constricted section with a reduced diameter, the reduction in diameter will cause an increase in the fluid flow speed thus the velocity of the fluid increases as the cross sectional area decreases, with the static pressure correspondingly decreasing resulting a fluid suction. Thereby ,an increase in the speed of the fluid occurs simultaneously with a decrease in pressure or a decrease in the fluid's potential energy (e.g Venturi effect).Furthermore, when the fluid such as a medication, flows through the tube that narrows to a smaller diameter, the partial restriction causes a higher pressure at the inlet than that at the narrow end. This pressure difference causes the fluid to accelerate toward the low pressure narrow section, in which it thus maintains a higher speed. The direct relationship between pressure difference and fluid speeds may further allow to determine the volumetric flow rate.

In another embodiment of the present invention, in order to provide a negative pressure, thus sucking in all of the fluid. The liquid reservoir is further connected to an additional narrow tube 250 which further configured to provide additional pressure from the back side of the

liquid reservoir. The additional pressure enables and accelerates the reservoir emptying from the remained liquid droplets.

In another embodiment of the present invention, the metered dose inhaler meets and compliance with FDA regulations.

Table 2 below presents the advantages of the inhaler of the present invention, compared to variety devices present in the market:

Category	**MDI** (Metered-dose inhalers)	**DPI** (Dry powder inhalers)	**Respimat™**	**Inhealer™**	**Inhealer™'s Advantages**
Particle average size	~4µm	~5µm	Under 5.8µm	**Adjustable between one or more of the following rangers:** **0.5-7.5 µm, or 0.5-2.5 µm, or 2.5-5.0 µm or 5.0-7.5µm**	Improved alveolar deposition & improved surface/volume ratio, thereby increase loading and kinetics per dosage
Duration of inhaled cloud / mist	0.15-0.36 sec	Under 0.2 sec	1.5 sec	**0.5-2.5 sec**	Improved absorption
Propulsion gas	CFC / HFA (chlorofluorocarbons/ hydrofluorocarbons)	None – breath actuated	None - spring driven	**None**	Lower costs

Disadvantages	Dependence on propulsion gas.	Dependence on patient's respiration.	Dependence on specialized nozzle - clogging.	**None**	No propulsion gas, Not breath dependent, use of common reliable nozzle.

Reference is now made to **Figures 10 to 11** which illustrate graphs of droplets distribution and droplets accumulating distribution which determine the quality of the mist sprayed out of the present invention's custom designed nozzles system.

Figure 10 further demonstrates a Gaussian curve of the droplets diameter of a medication dispersed from the inhaler comprising the nozzles system of the present invention vs. the particles percentage amount. As illustrated, the inhaler may provide more that 50% droplets from the medication droplets population having a 2mμ diameter. Furthermore, the inhaler may further provide more than 75% droplets from the medication droplets population having a 3mμ diameter. The graph is characterized by a bell-shaped curve of the diffusion of medication particles which further illustrates that an optimal absorption percentage of medication can be achieved in droplets size in the range of about 0.8μ to about 6μ.

The inhaler was further tested using the MALVERN Spray tech particle sizing analyzer for determining the droplets diameter and duration vs. the medication dispersed dose.

Table 3 below demonstrates the particle size and distribution when using the inhaler of the present invention. The inhaler of the present invention is with ability to generate a mist that consists of 80% droplets smaller than 3 microns and 90% droplets smaller than 5 microns.

Table 3

CRITERIA\NOZZLE EXP	**Peak particle size [μ]**	**Accumulated distribuition >75% range [μ]**	**Accumulated distribuition> 80% range[μ]**
1_3.5b_27mms_C	~1.8	1.848-2.154	2.154-2.512
1_3.5b_27mms_D	~2.0	1.848-2.154	2.154-2.512
Summary 3.5bar	~2.0	1.848-2.154	2.154-2.512
1_4b_27mms_3	~1.5	2.154-2.512	2.512-2.929

1_4b_27mms_4	~1.4	2.154-2.512	2.512-2.929
Summary 4 bar	~1.5	2.154-2.512	2.512-2.929
DBL_3.2B_1	~4.3	7.356-8.577	7.356-8.577

The present invention further provides a inhaler for improving medicament's alveolar deposition is with a medication lunching velocity of about 40µL/s , air velocity of about 100cc/s, whilst the minimum diameter of the tube of the venturi system is of about 0.95mm and the minimum diameter of the medication inlet is of about 0.38mm. This results an air-medication mixture having a velocity of about 20m/s. The inhaler further provides droplets with an average diameter of about 2.4µ.

In another embodiment of the present invention, the inhaler may further be adapted for systemic administration of active compounds and drug compositions (e.g via a route of administration of medication nutrition or other substance into the circulatory system so that the entire respiratory system is affected), therefore, adapting the respiratory system as a port of entry for systemic distribution and/or absorption of drugs (e.g. insulin) via enteral administration.

The present invention further provides a method of dispersing a dose from a metered dose inhaler, comprising steps of: providing a metered dose inhaler with an air actuator , providing at least one inlet of liquefied gas (LG), at least one air outlet, at least one first LG-expanding volume and at least one second air-containing volume, providing the first and second volumes separated by means of an LG-blocking member; a container with an LG; providing the container in a fluid connection with the LG-expanding volume *via* the at least one LG inlet; and then releasing the LG directly to the actuator; wherein the method of releasing the LG directly to the actuator further comprises steps of facilitating metered dose airflow by an air actuator thereby allowing the expansion of the LG in the LG-expanding volume from its condensed liquid phase to its expanded gas phase; and further wherein the method additionally comprising steps of facilitating the compression of the air within the air-containing volume by the expansion of the LG, such that a metered dose LG-free air flow is inhaled *via* the air outlet.

In another embodiment of the present invention, the method additionally comprising step of selecting the air actuator from a group consisting of a piston pump, a rotor, a turbine, an inflatable membrane and a combination thereof.

In another embodiment of the present invention, the method additionally comprising steps of configuring the membrane as a diaphragm or condom.

In another embodiment of the present invention, the method additionally comprising step of providing a mist nozzle in a fluid connection with the inhaler.

In another embodiment of the present invention, the method additionally comprising step of selecting the LG from a group consisting of liquefied petroleum gas (LPG), propane , butane and a mixture thereof.

In another embodiment of the present invention, the method additionally comprising step of selecting a medicament from a group consisting of solid form, gas form, liquid form and a mixture thereof.

In another embodiment of the present invention, the method additionally comprising step of configuring the inhaler for spraying at least one dose form selected from the group consisting of a gas material, a flow material, fine particles, a liquid material, a powder material and a mixture thereof.

In another embodiment of the present invention, the method additionally comprising step of providing the inhaler as a portable and handheld device.

The present invention further provides a method of treating respiration disorders in a patient which comprises use by the patient of a metered dose inhaler as described in the present invention.

The present invention further provides a device operative in a method of dispersing a dose, comprising steps of: providing a metered dose inhaler with an air actuator comprising at least one inlet of liquefied gas (LG), at least one air outlet, at least one first LG-expanding volume and at least one second air-containing volume, the first and second volumes are effectively separated by means of an LG-blocking member; providing a container with an LG source; the container is in a fluid connection with the LG-expanding volume *via* the at least one LG inlet; releasing the LG directly to the actuator; wherein the step of releasing the LG directly to the actuator is followed by an additional step of facilitating a metered dose airflow by the air actuator, thereby allowing the expansion of the LG in the LG-expanding volume from its condensed liquid phase to its expanded gas phase, and further wherein the step is followed by an additional step of facilitating the compression of the air within the air-containing volume by the expansion of the LG, such that a metered dose LG-free air flow is inhaled *via* the air outlet.

The present invention further provides a metered dose inhaler for improving medicament's alveolar deposition comprising:

at least one inlet of liquefied gas (LG) communicating with at least one first volume for LG-expansion;

at least one second volume for containing a medicament, the second volume in in fluid connection with at least one medicament outlet;

an air actuator configured for moving air and the medicament towards patient's respiratory tract; and

a container with a liquefied LG source, the container is in fluid connection with the first volume, where the LG is allowed to gasify, *via* the at least one LG inlet;

The air actuator comprises an LG-blocking member separating the first volume where LG is in liquid phase and the second volume where the LG is in it gas phase; and wherein the LG-blocking member moveable towards the medicament outlet by means of a pressure exerted by the LG-phase transition, thereby emitting effective measure of the medicament.

In another embodiment of the present invention, the metered dose inhaler for improving medicament's alveolar deposition is with a medication lunching velocity of about 40μL/s , air velocity of about 100cc/s, whilst the minimum diameter of the tube of the venturi system is of about 0.95mm and the minimum diameter of the medication inlet is of about 0.38mm. This results an air-medication mixture having a velocity of about 20m/s. The metered dose inhaler further provides droplets with an average diameter of about 2.4μ.

The embodiments were chosen and described to provide the best illustration of the principals of the invention and its practical application, and to enable one of ordinary skill in the art to utilize the invention in various embodiments and with various modifications as are suited to the particular use contemplated. All such modifications and variations are within the scope of the invention as determined by the appended claims when interpreted in accordance with the breadth they are fairly, legally, and equitably entitled.

CLAIMS

1. A metered dose inhaler, comprising:

   an air actuator comprising at least one inlet of liquefied gas (LG), at least one air outlet, at least one first LG-expanding volume and at least one second air-containing volume, said first and second volumes are effectively separated by means of a LG-blocking member;

   a container with an LG source; said container is in a fluid connection with said LG-expanding volume *via* said at least one LG inlet;

   wherein said air actuator is facilitating a metered dose airflow by allowing the expansion of said LG in said at least one LG-expanding volume from its condensed liquid phase to its expanded gas phase, and

   further wherein said expansion of said LG facilitates the compression of said air within said at least one air-containing volume, such that a metered dose LG-free air flow is inhalable *via* said at least one air outlet.

2. A metered dose inhaler, comprising:

   a. a liquefied gas (LG)source;

   b. a volume adapted to contain LG, said volume fluidly connected to said LG source;

   c. an air-containing volume;

   d. an air outlet fluidly connected to said air-containing volume; and

   e. an air actuator separating said LG-containing volume from said air-containing volume; said air actuator is adapted to release a flow of compressed air through said air outlet at such time as a predetermined LG pressure has been reached in said volume adapted to contain LG;

   wherein said LG and said air remain separate at all times; further wherein said compressed air is released at a predetermined pressure.

3. The inhaler according to claim 1, wherein said air actuator is selected from a group consisting of a piston pump, a turbine, a rotor, an inflatable membrane, a spring and a combination thereof.

4. The inhaler according to claim 1, wherein said inhaler additionally comprising a valve means in communication with said air actuator; said valve means comprising at least one control valve having a single state and at least two directing valves configured to identify and control said actuator movement, position and direction.

5. The inhaler according to claim 1, wherein said at least two directing valves are based on ferromagnetic mechanism.
6. The inhaler according to claim 1, wherein said inhaler additionally comprising a valve in a fluid connection with said LG source.
7. The inhaler according to claim 1, wherein additionally comprising an energy source selected from the group consisting of: electric motor, electric linear actuator, electromagnetic solenoid based actuator, spring operated mechanism, hydraulic pump, compressed gas (CG), flywheel, steam engine, carnot machine, stirling cycle and a combination thereof.
8. The inhaler according to claim 1, wherein said air actuator is adapted for controlling the flow of the compressed air after buildup of a predetermined pressure.
9. The inhaler according to claim 1, wherein said inhaler additionally comprising an air inlet.
10. The inhaler according to claim 1, wherein said inhaler additionally comprising an LG outlet.
11. The inhaler according to claim 1, wherein said LG-expanding volume contains a first compressed LG compressed between about 20 and about 200 psig, and said air containing volume contains compressed air compressed between about 3 and about 10 psig.
12. The inhaler according to claim 3, wherein said membrane, when inflated by said LG source, compresses air flow *via* said air outlet.
13. The inhaler according to claim 3, wherein said membrane is configured as a diaphragm-like shape or a condom-like shape.
14. The inhaler according to claim 1, wherein said inhaler additionally comprising a mist nozzle in a fluid connection with said air outlet.
15. The inhaler according to claim 1, wherein said LG is selected from the group consisting of liquefied petroleum gas (LPG) ,propane, butane and a combination thereof.
16. The inhaler according to claim 1, wherein said inhaler additionally comprising a medicament metering mechanism comprising a medicament chamber and a medicament metering valve, said valve is in a fluid connection with said medicament chamber.
17. The inhaler according to claim 16, wherein said medicament is in a form selected from the group consisting of solid form, gas form, liquid form and a combination thereof.

18. The inhaler according to claim 1, wherein said inhaler is administrated in a manner selected from the group consisting of: systemic administration *via* patient's lungs, topical administration and a combination thereof .

19. The inhaler according to claim 1, wherein said inhaler is configured for spraying one or more members of a group consisting of gas materials , liquid materials, fine particles, powder materials and a mixture thereof.

20. The inhaler according to claim 1, wherein said inhaler is portable and handheld.

21. The inhaler according to claim 1, wherein said inhaler is used for treating asthma, chronic obstructive pulmonary disease (COPD) and other respiratory diseases and conditions.

22. A method of introducing a dose from a metered dose inhaler , comprising steps of:

providing a metered dose inhaler with an air actuator; providing at least one inlet of liquefied gas (LG), at least one air outlet, at least one first LG-expanding volume and at least one second air-containing volume, providing said first and second volumes separated by means of an LG-blocking member; a container with an LG source; providing said container in a fluid connection with said LG-expanding volume *via* said at least one LG inlet; and

releasing said LG directly to said actuator;

wherein said step of releasing said LG directly to said actuator is followed by an additional step of facilitating a metered dose airflow by said air actuator, thereby allowing the expansion of said LG in said LG-expanding volume from its condensed liquid phase to its expanded gas phase, and further wherein said step is followed by an additional step of facilitating the compression of said air within said air-containing volume by said expansion of said LG, such that a metered dose LG-free air flow is inhaled *via* said air outlet.

23. The method according to claim 22, wherein said method additionally comprising step of selecting said air actuator from a group consisting of a piston pump, a rotor, a turbine ,an inflatable membrane, a spring and a combination thereof.

24. The method according to claim 23, wherein said method additionally comprising steps of configuring said membrane as a diaphragm or condom.

25. The method according to claim 22, wherein said method additionally comprising step of providing a mist nozzle in a fluid connection with said inhaler.

26. The method according to claim 22, wherein said method additionally comprising step of selecting said LG from a group consisting of liquefied petroleum gas (LPG), propane , butane and a mixture thereof.
27. The method according to claim 22, wherein said method additionally comprising step of providing a medicament selected from a group consisting of solid form, gas form, liquid form and a mixture thereof.
28. The method according to claim 22, wherein said method additionally comprising step of configuring said inhaler for spraying at least one dose form selected from the group consisting of of a gas material, a flow material, fine particles ,a liquid material , a powder material and a mixture thereof .
29. The method according to claim 22, wherein said method additionally comprising step of providing said inhaler as a portable and handheld device.
30. The method according to claim 22, wherein said method additionally comprising step of introducing said inhaler to the topical system or the systemic system *via* patient's lungs.
31. The method according to claim 22, wherein said method additionally comprising step of providing valve means in communication with said air actuator; said valve means comprising at least one control valve having a single state and at least two directing valves configured to identify and control said actuator movement, position and direction.
32. A method of treating respiration disorders in a patient which comprises use by the patient of a metered dose inhaler as claimed in claim 1.
33. A device operative in a method of dispersing a dose, comprising steps of:

providing a metered dose inhaler with an air actuator comprising at least one inlet of liquefied gas (LG), at least one air outlet, at least one first LG-expanding volume and at least one second air-containing volume, said first and second volumes are effectively separated by means of an LG-blocking member; providing a container with an LG source; said container is in a fluid connection with said LG-expanding volume *via* said at least one LG inlet;

releasing said LG directly to said actuator;

wherein said step of releasing said LG directly to said actuator is followed by an additional step of facilitating a metered dose airflow by said air actuator, thereby allowing the expansion of said LG in said LG-expanding volume from its condensed liquid phase to its expanded gas phase, and further wherein said step is followed by an additional step

of facilitating the compression of said air within said air-containing volume by said expansion of said LG, such that a metered dose LG-free air flow is inhaled *via* said air outlet.

34. A metered dose inhaler for improving medicament's alveolar deposition comprising:

at least one inlet of liquefied gas (LG) communicating with at least one first volume for LG-expansion;

at least one second volume for containing a medicament, said second volume in in fluid connection with at least one medicament outlet;

an air actuator configured for moving air and said medicament towards patient's respiratory tract; and

a container with a liquefied LG source, said container is in fluid connection with said first volume, where said LG is allowed to gasify, *via* said at least one LG inlet;

wherein said air actuator comprises an LG-blocking member separating said first volume where LG is in liquid phase and said second volume where said LG is in it gas phase; and

wherein said LG-blocking member moveable towards said medicament outlet by means of a pressure exerted by said LG-phase transition, thereby emitting effective measure of said medicament.

35. The inhaler according to claim 34, wherein said air actuator is selected from a group consisting of a piston pump, a turbine, a rotor, an inflatable membrane, a spring and a combination thereof.

36. The inhaler according to claim 34, wherein said air outlet is provided with an orifice having a diameter of about 0.2mm to about 0.9mm, operably configured to emit effective measure of said medicament having average particles size equal to or less than 5μm.

37. The inhaler according to claim 34, wherein said LG is with a pressure operably configured to emit effective measure of said medicament having average particles size equal to or less than 5μm.

38. The inhaler according to claim 34, wherein said second volume is with a volume operably configured to emit effective measure of said medicament having average particles size equal to or less than 5μm.

39. The inhaler according to claim 34, wherein said LG blocking member is with a speed of movement operably configured to emit high medicament quantity having average particles size equal to or less than 5μm.

40. A nozzles system for dispensing a consecutively dose of a medicament in the form of a mist, comprising:
    a. an inhaler comprising an air actuator comprising at least one inlet of liquefied gas (LG), at least one air outlet, at least one first LG-expending volume and at least one second air-containing volume, said first and second volumes are effectively separated by means of an LG-blocking member;
    b. a container with a LG source; said container is in a fluid connection with said LG-expending volume *via* said at least one LG inlet and a spring means in communication with said air actuator;
    c. at least two nozzles in fluid communication with said air outlet;

    wherein said nozzles are venturi nozzles arrange in a predetermined angle such that the droplet size of a medication dispersed from said inhaler is in a range of about 1μ to about 5μ;
41. The nozzles system according to claim 40, wherein nozzles are configured to disperse at least 2.5 ml of said medication in approximately 2 minutes.
42. The nozzles system according to claim 40, wherein said at least two nozzles are interconnected in a vertically or to each other.
43. The nozzles system according to claim 40, wherein said nozzle type is selected from the group consisting of laskin nozzle, annular flow high velocity , colliding streams nozzle, additive energy nozzles, swirl nozzle and a combination thereof.
44. The nozzles system according to claim 40, wherein said nozzles are with a diameter configured to disperse a droplets size less than 7μ vs the released dose or medication.
45. The nozzles system according to claim 40, wherein said nozzles are configured with a diameter of about 0.2mm to about 0.9mm to provide a droplets distribution of more than 70% of said medication.
46. The nozzles system according to claim 40, wherein said at least one nozzle is with a diameter of about 0.5mm to disperse a droplets size is in a range of about 2μ to about 3μ
47. The nozzles system according to claim 40, wherein said at least two nozzles interconnected in a vertical angle generate a mist of about 80% droplets smaller than 3μ.
48. The nozzles system according to claim 40, wherein said at least two nozzles interconnected in a vertical angle generate a mist of about 90% droplets smaller than 5μ.

49. A method of improving medicament's alveolar deposition characterized by the following steps:

a. providing a metered dose inhaler for improving medicament's alveolar deposition with at least one inlet of liquefied gas (LG) communicating with at least one first volume for LG-expansion; at least one second volume for containing a medicament, said second volume in in fluid connection with at least one medicament outlet;

an air actuator configured for moving air and said medicament towards patient's respiratory tract; and

a container with a liquefied LG source, said container is in fluid connection with said first volume, where said LG is allowed to gasify, *via* said at least one LG inlet;

b. releasing said liquefied LG directly to said actuator, thereby gasifying the LG and actuating said actuator;

c. facilitating the flow of an effective measure of said medicament towards the alveoli *via* patient's respiratory tract.

50. The method of claim 49, wherein said method additionally comprising step of reducing, by means of said medicament dispensing nozzle, the average particle size of said medicament outflow to value being equal to or less than 5mm, followed by a step of facilitating the flow of said medicament.

51. The method according to claim 49, wherein said method additionally comprising step of selecting said air actuator from a group consisting of a piston pump, a rotor, a turbine ,an inflatable membrane, a spring and a combination thereof.

52. A standard of care protocol for increasing both *(i)* deposition of a medicament and *(ii)* kinetics per internal surface area of the alveoli to the respiratory tract by means of a metered dose inhaler, said protocol characterized by

providing a metered dose inhaler for improving medicament's alveolar deposition with at least one inlet of liquefied gas (LG) communicating with at least one first volume for LG-expansion; at least one second volume for containing a medicament, said second volume in in fluid connection with at least one medicament outlet;

an air actuator configured for moving air and said medicament towards patient's respiratory tract; and

a container with a liquefied LG source, said container is in fluid connection with said first volume, where said LG is allowed to gasify, *via* said at least one LG inlet; and facilitating the flow towards the respiratory tract of a patient, by said air actuator, an LG-free meter-dose medicament comprising a medicament, wherein said inhaled medicament is of an average particles size equal to or less than 7µm, thereby absorbing more than 50% of said medicament in the alveoli.

53. The standard of care protocol according to claim 52, wherein said standard of care protocol additionally comprising step of selecting said air actuator from a group consisting of a piston pump, a rotor, a turbine ,an inflatable membrane, a spring and a combination thereof.

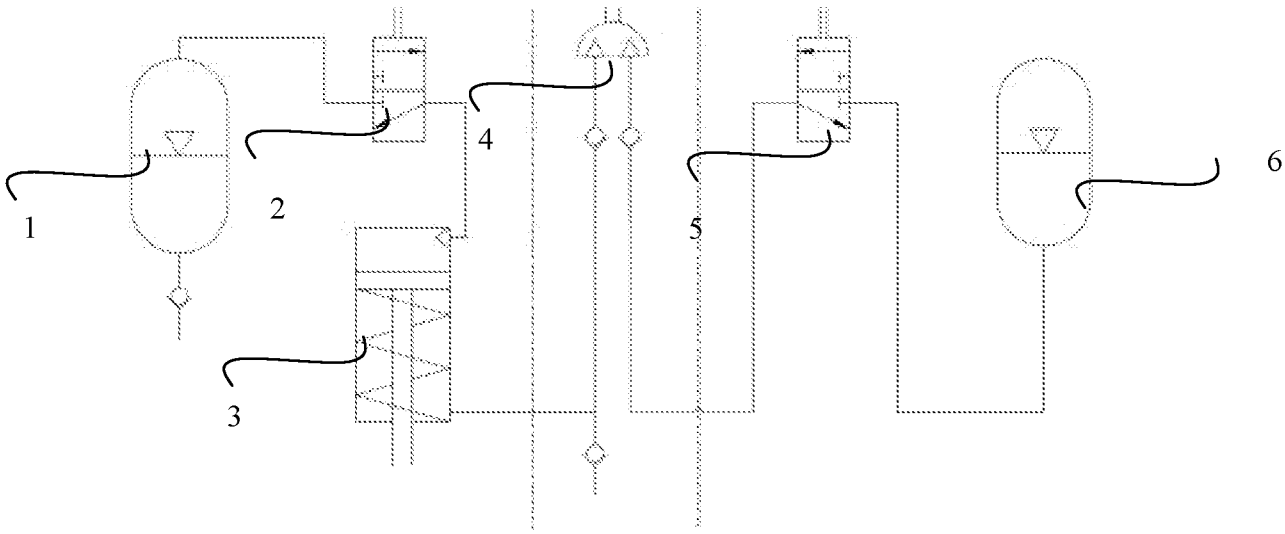

FIG. 1A

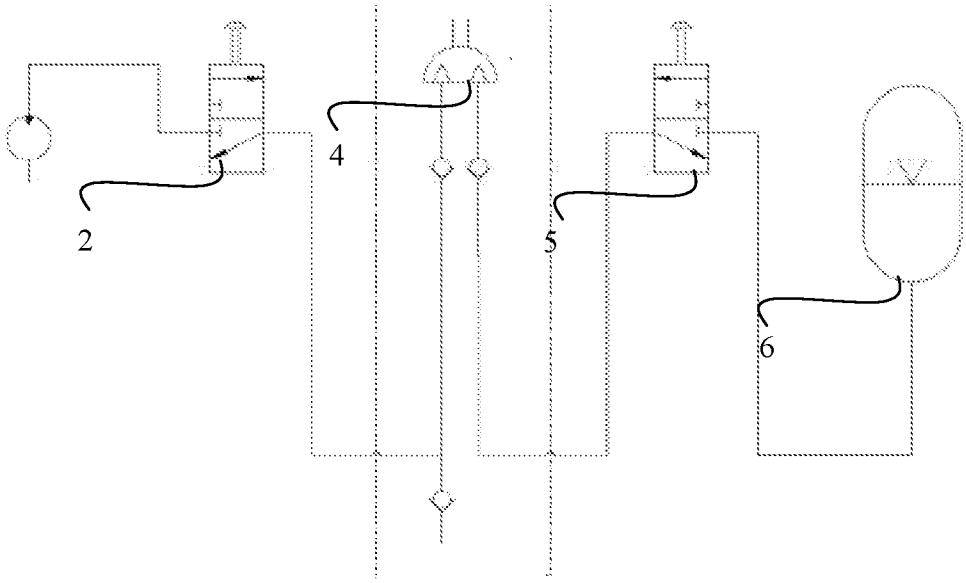

FIG. 1B

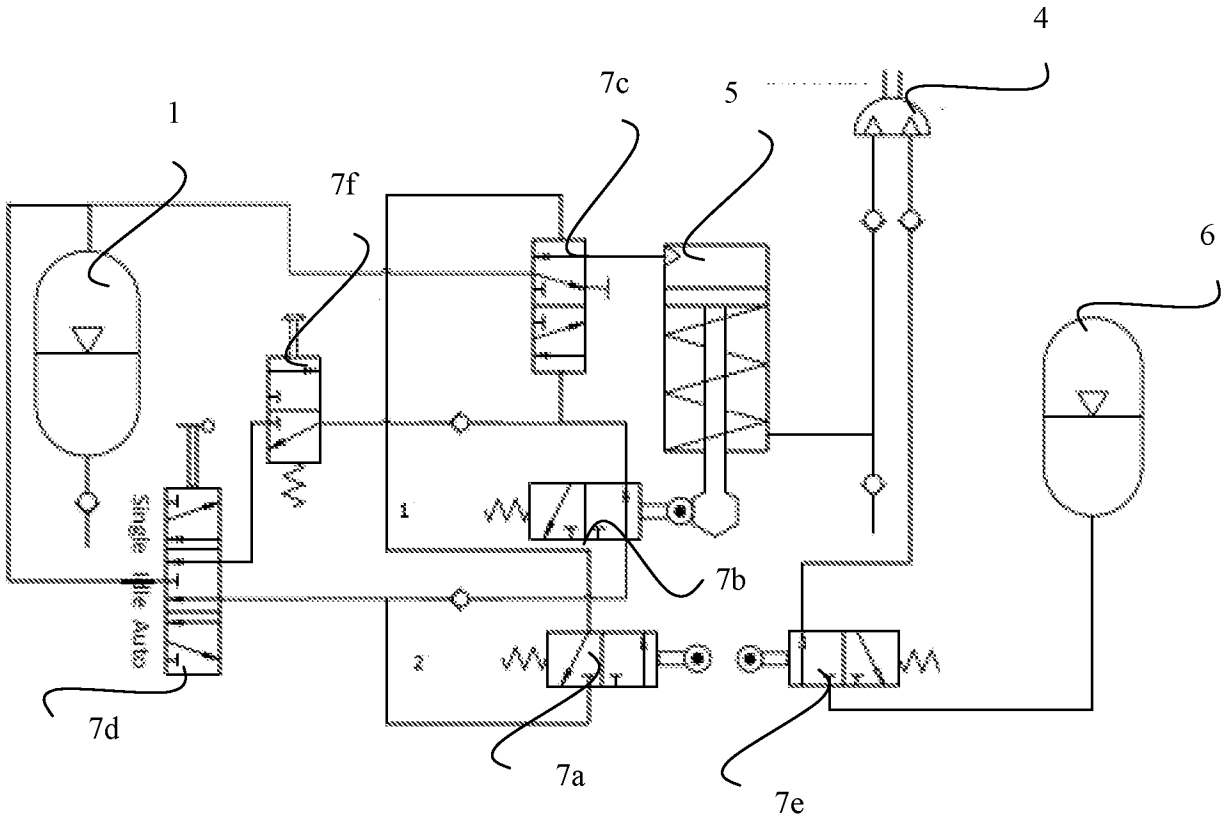

FIG. 1C

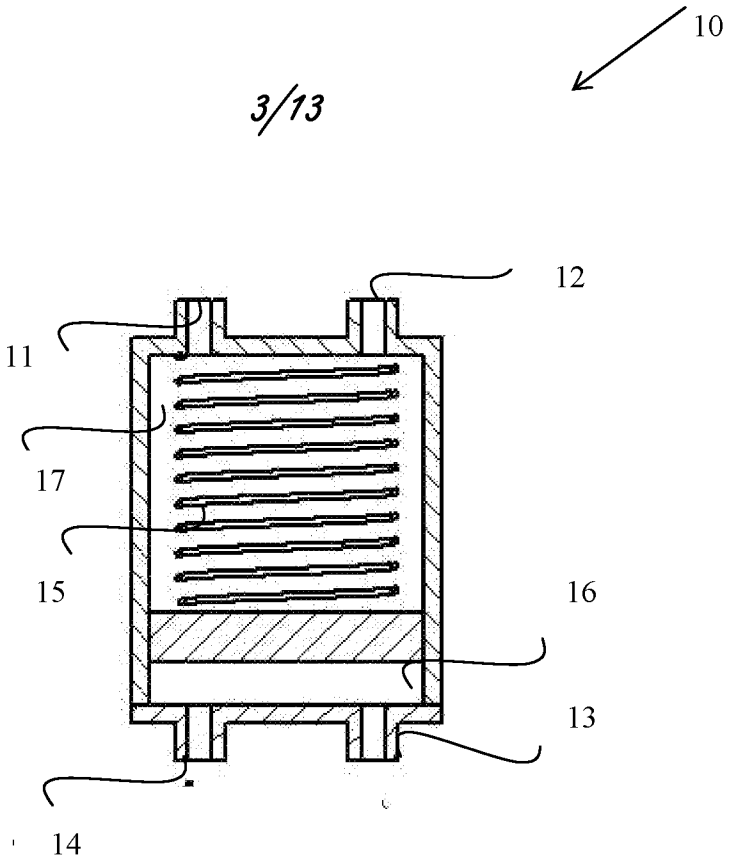

FIG. 2

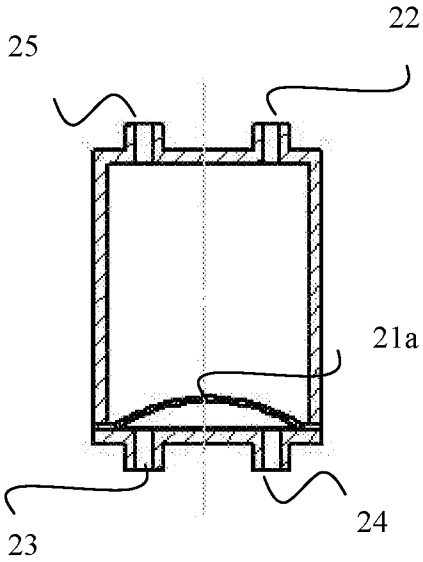

FIG. 3A

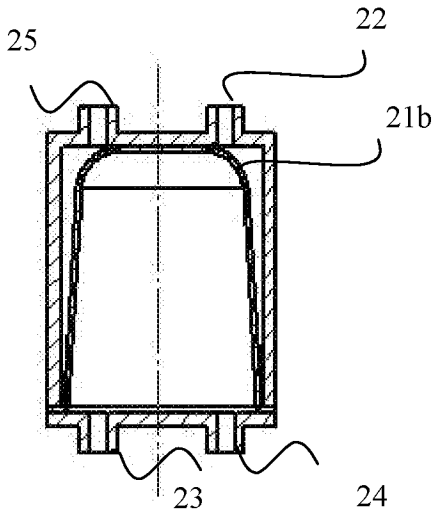

FIG. 3B

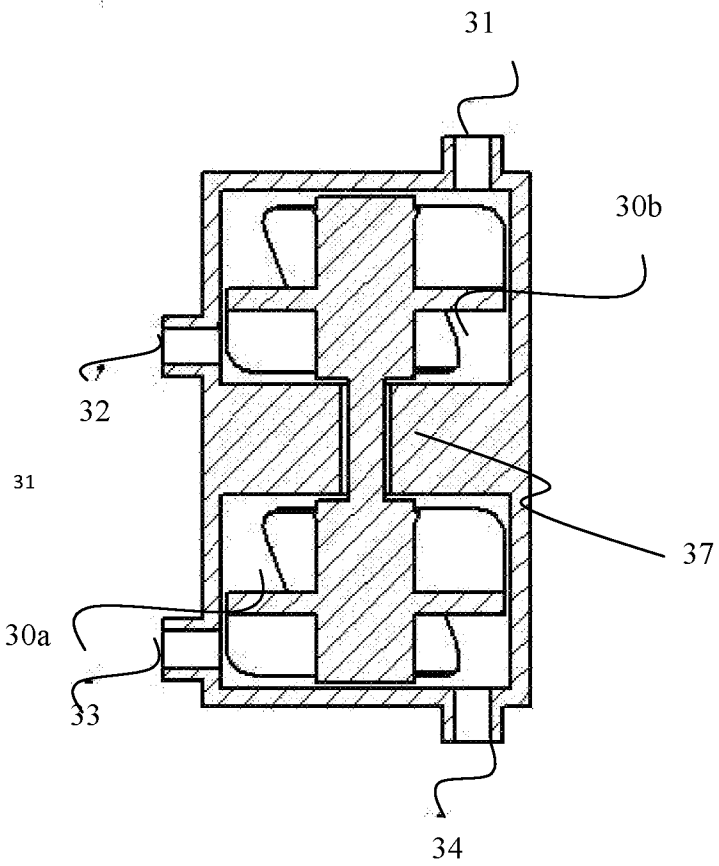

FIG. 4

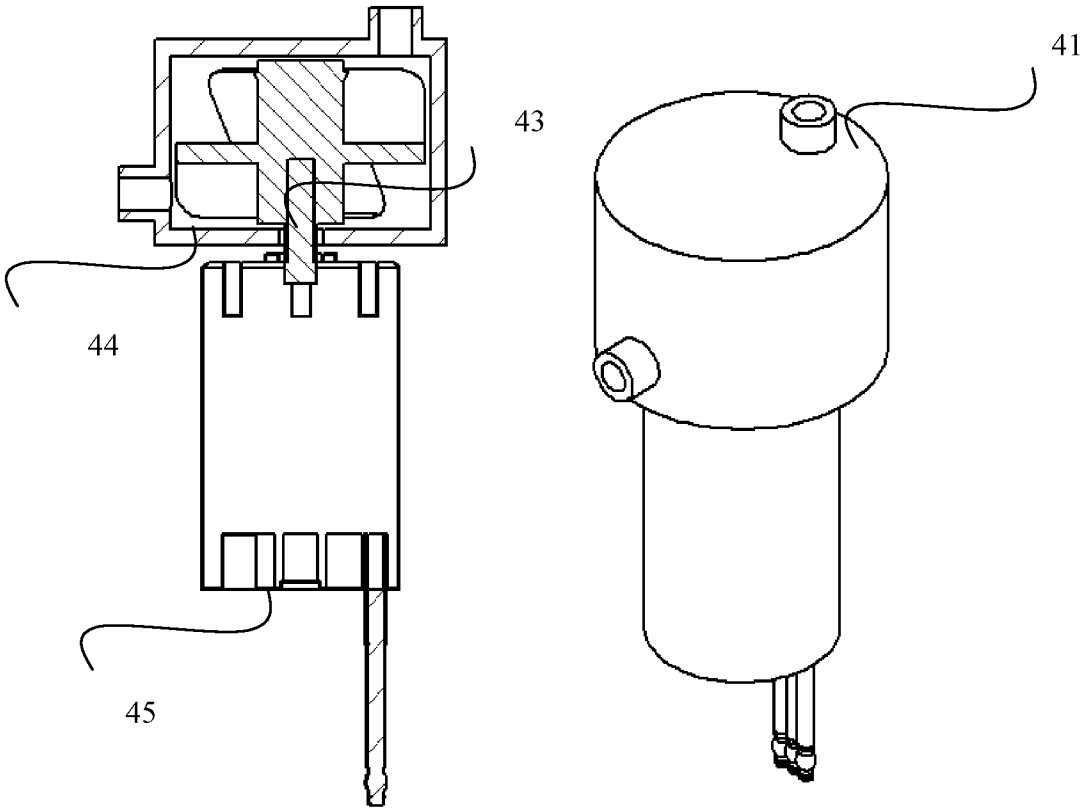

FIG. 5

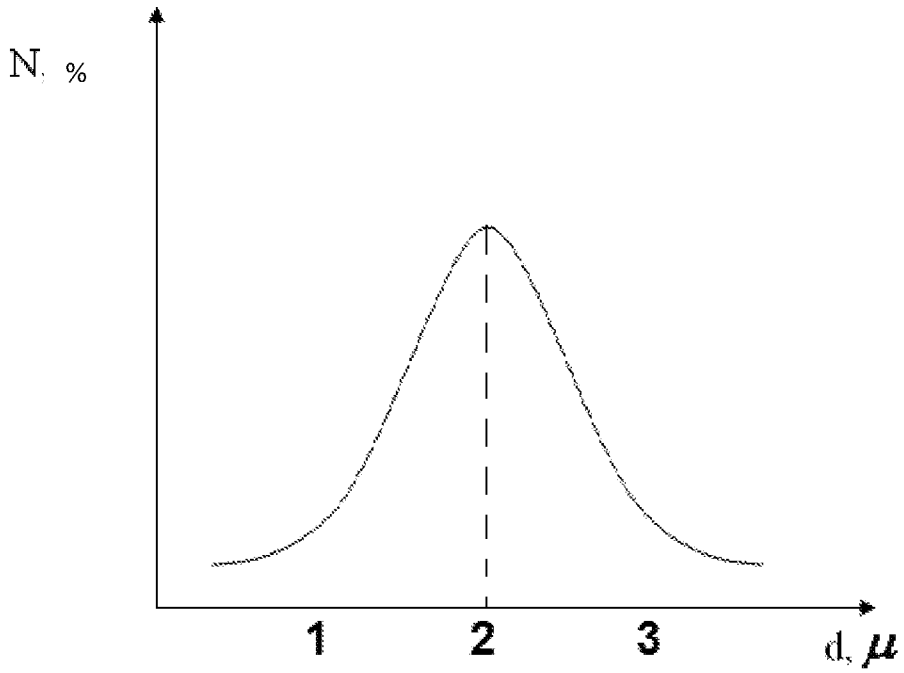

FIG. 6

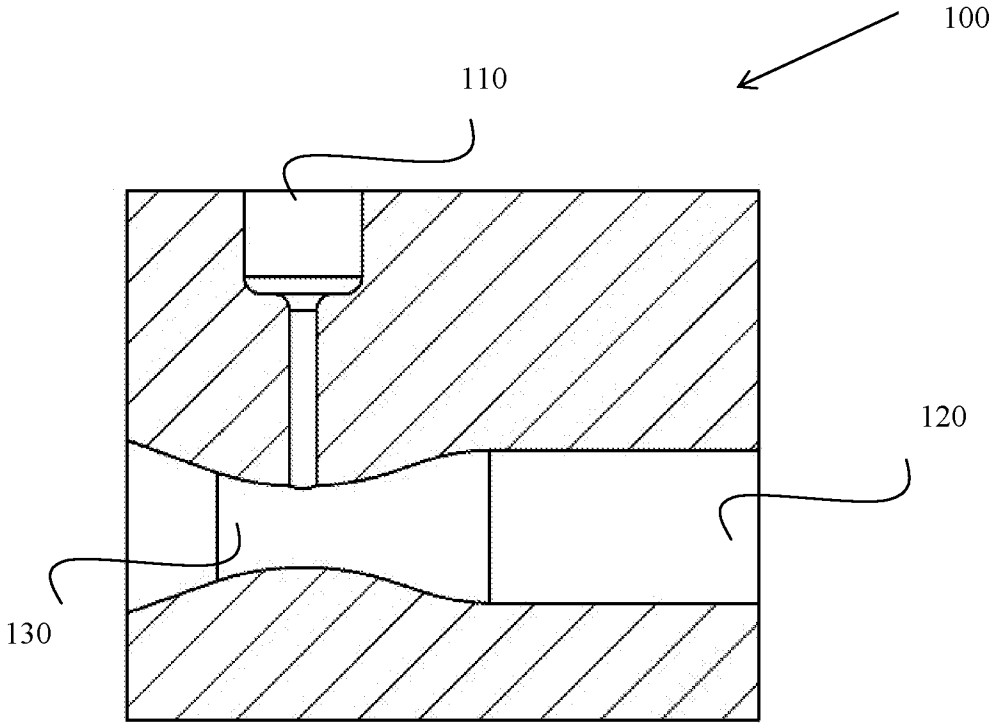

FIG. 7A

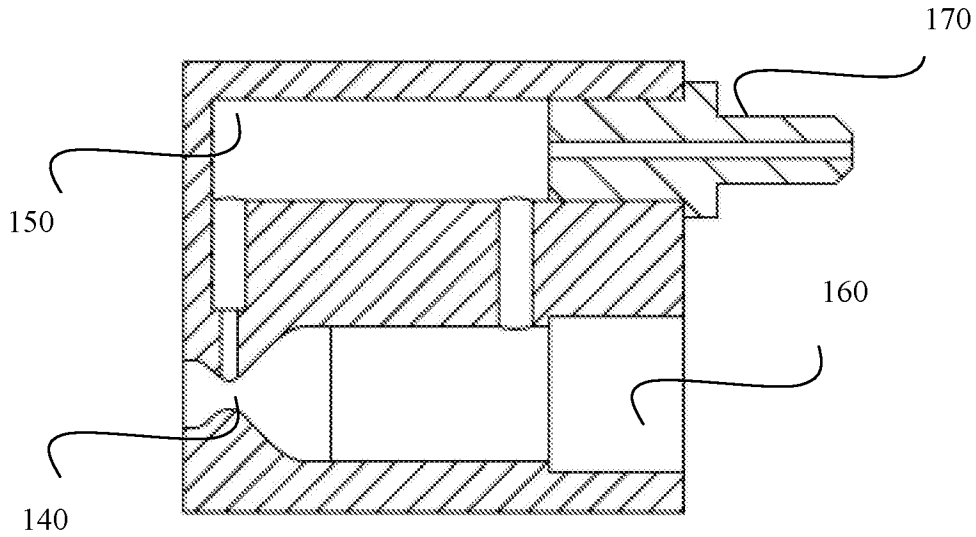

FIG. 7B

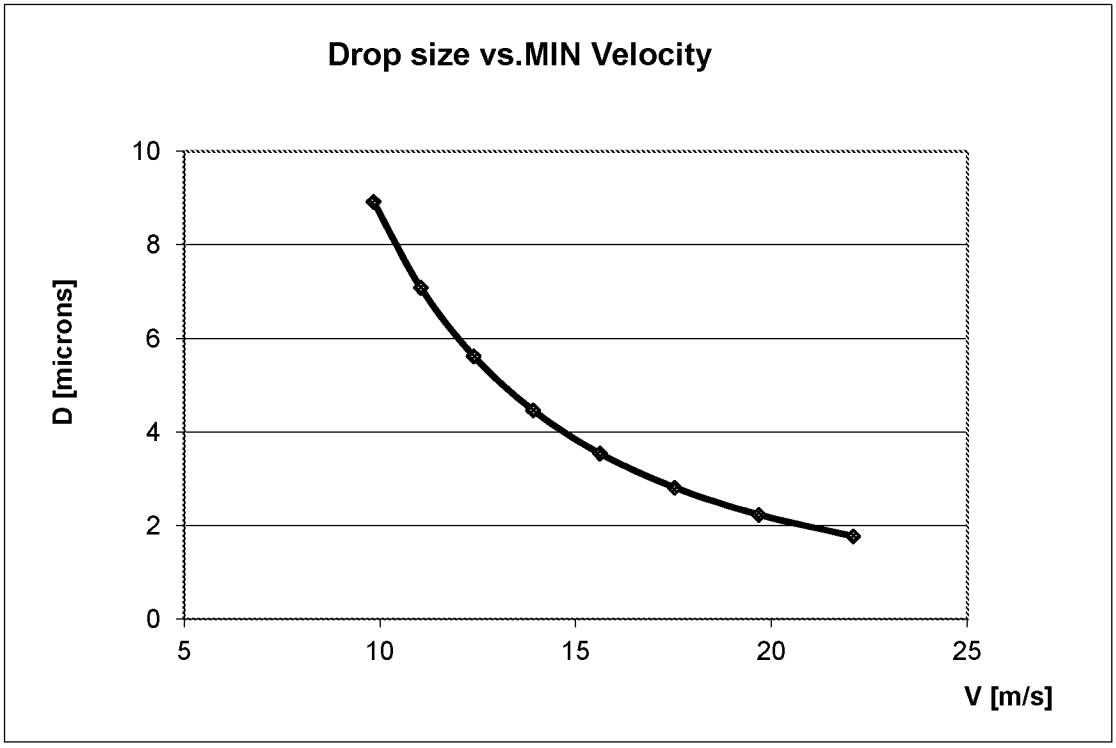

FIG. 8

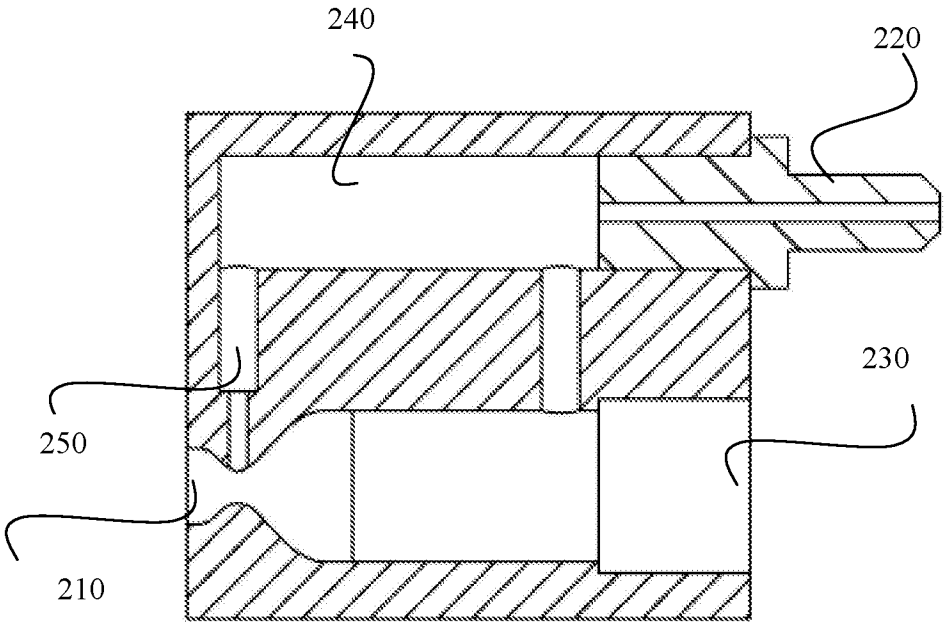

FIG. 9

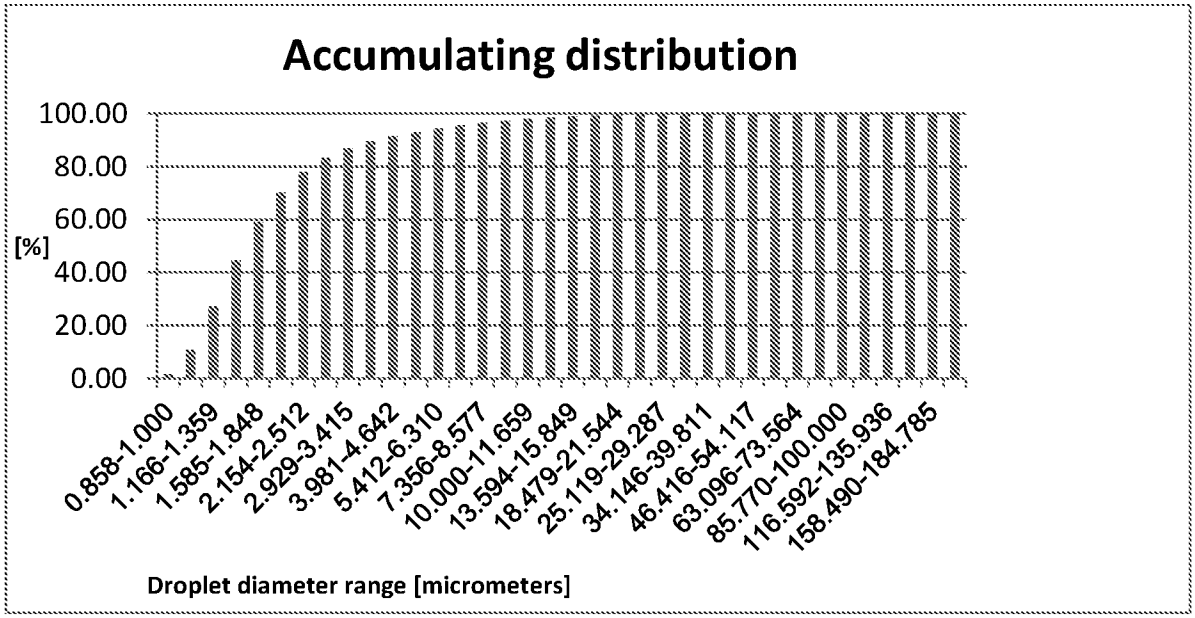
Accumulating distribution
100.00
80.00
60.00
40.00
20.00
0.00
[%]
0.858-1.000
1.166-1.359
1.585-1.848
2.154-2.512
2.929-3.415
3.981-4.642
5.412-6.310
7.356-8.577
10.000-11.659
13.594-15.849
18.479-21.544
25.119-29.287
34.146-39.811
46.416-54.117
63.096-73.564
85.770-100.000
116.592-135.936
158.490-184.785
Droplet diameter range [micrometers]

FIG. 10

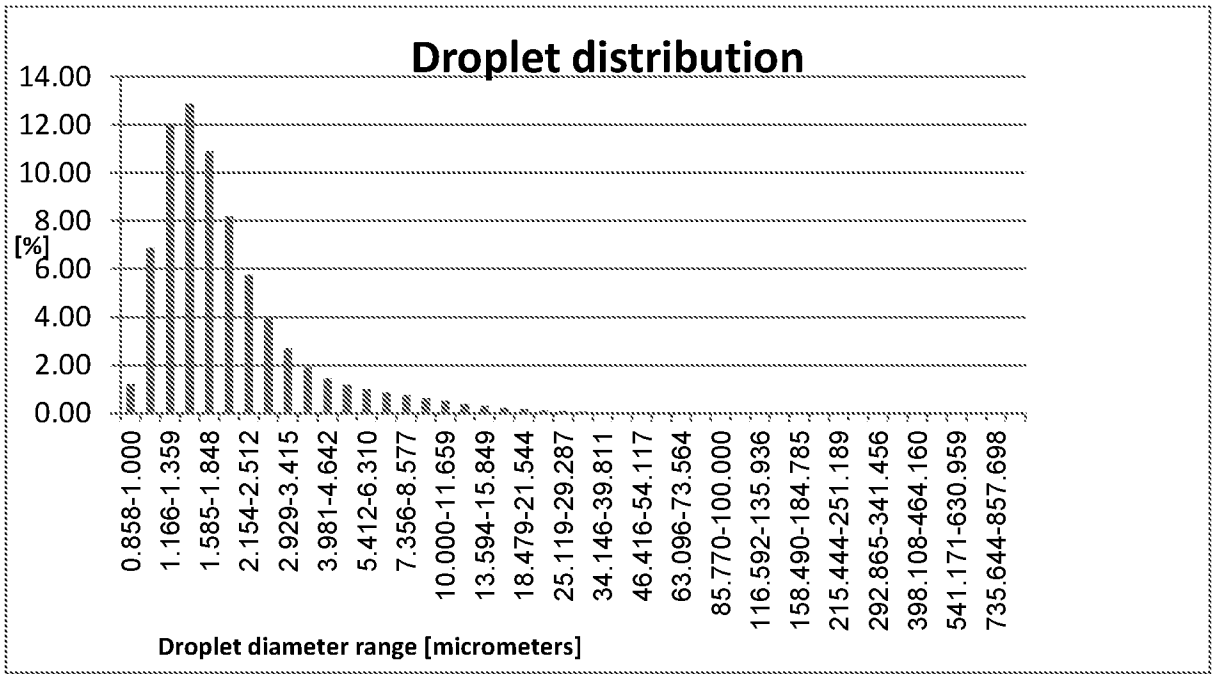
Droplet distribution
14.00
12.00
10.00
8.00
6.00
4.00
2.00
0.00
[%]
0.858-1.000
1.166-1.359
1.585-1.848
2.154-2.512
2.929-3.415
3.981-4.642
5.412-6.310
7.356-8.577
10.000-11.659
13.594-15.849
18.479-21.544
25.119-29.287
34.146-39.811
46.416-54.117
63.096-73.564
85.770-100.000
116.592-135.936
158.490-184.785
215.444-251.189
292.865-341.456
398.108-464.160
541.171-630.959
735.644-857.698
Droplet diameter range [micrometers]

FIG. 11

INTERNATIONAL SEARCH REPORT

International application No.
PCT/IL2014/050600

A. CLASSIFICATION OF SUBJECT MATTER

See extra sheet.

According to International Patent Classification (IPC) or to both national classification and IPC

B. FIELDS SEARCHED

Minimum documentation searched (classification system followed by classification symbols)

IPC (2014.01) A61M, B65D

Documentation searched other than minimum documentation to the extent that such documents are included in the fields searched

Electronic data base consulted during the international search (name of data base and, where practicable, search terms used)

Databases consulted: Google Patents, Google Scholar, FamPat database

Search terms used: Inhaler , compressed air , liquefied gas , butane , dispenser , nozzle , venturi , propellant , medication , piston , droplet size

C. DOCUMENTS CONSIDERED TO BE RELEVANT

Category*	Citation of document, with indication, where appropriate, of the relevant passages	Relevant to claim No.
X	US 3788525 A THRONTON M. L. et al. 29 Jan 1974 (1974/01/29) fig. 1&5 ; col. 1 line 8; col. 1 lines 12 ; col. 1 lines 29-39; col. 3 line 25-35; col. 4 lines 24-51 ; col. 5 lines 59-62	1-3,6,8-11,14,16-23, 25,27-30,32-39,49,51
Y		12,13,15,24,26, 40-48,50
A	US 3733010 A RICCIO P. R. 15 May 1973 (1973/05/15) col. 2 lines 7-12; col. 9 lines 51-52;col. 10 lines 65-67; col. 11 lines 49-51 ; col. 12 line 62-col. 13 line 3	1-3,6,8-30,32-51
A	US 3672545 A MARAND J. 27 Jun 1972 (1972/06/27) col. 1 lines 44-50 ; col. 6 lines 3-12; col. 6 line 41-43	1-3,6,8-30,32-51
Y	WO 9007351 A1 SCHENK H. G. et al. 12 Jul 1990 (1990/07/12) abstract ; page 4 lines 8-22 ; page 5 lines 7-27 ; fig. 1-5	12,13,24

[X] Further documents are listed in the continuation of Box C.

[X] See patent family annex.

* Special categories of cited documents:

"A" document defining the general state of the art which is not considered to be of particular relevance

"E" earlier application or patent but published on or after the international filing date

"L" document which may throw doubts on priority claim(s) or which is cited to establish the publication date of another citation or other special reason (as specified)

"O" document referring to an oral disclosure, use, exhibition or other means

"P" document published prior to the international filing date but later than the priority date claimed

"T" later document published after the international filing date or priority date and not in conflict with the application but cited to understand the principle or theory underlying the invention

"X" document of particular relevance; the claimed invention cannot be considered novel or cannot be considered to involve an inventive step when the document is taken alone

"Y" document of particular relevance; the claimed invention cannot be considered to involve an inventive step when the document is combined with one or more other such documents, such combination being obvious to a person skilled in the art

"&" document member of the same patent family

Date of the actual completion of the international search	Date of mailing of the international search report
21 Sep 2014	22 Sep 2014

Name and mailing address of the ISA:	Authorized officer
Israel Patent Office Technology Park, Bldg.5, Malcha, Jerusalem, 9695101, Israel Facsimile No. 972-2-5651616	GUTMAN Ariel Telephone No. 972-2-5657816

INTERNATIONAL SEARCH REPORT

International application No.
PCT/IL2014/050600

C (Continuation). DOCUMENTS CONSIDERED TO BE RELEVANT

Category*	Citation of document, with indication, where appropriate, of the relevant passages	Relevant to claim No.
Y	US 5248493 A BROWN K. 28 Sep 1993 (1993/09/28) col. 2 lines 17-32	15,26
Y	US 3926343 A KLEINER E. K. 16 Dec 1975 (1975/12/16) abstract; fig. 1-3 ; col. 2 lines 27-38 ; col. 4 line 45 – col. 5 line 17	40-48,50

INTERNATIONAL SEARCH REPORT
Information on patent family members

International application No.
PCT/IL2014/050600

Patent document cited search report	Publication date	Patent family member(s)	Publication Date
US 3788525 A	29 Jan 1974	US 3788525 A	29 Jan 1974
US 3733010 A	15 May 1973	US 3733010 A	15 May 1973
		AT 321190 B	25 Mar 1975
		AT 321191 B	25 Mar 1975
		AU 467599 B2	04 Dec 1975
		AU 470526 B2	18 Mar 1976
		AU 4157472 A	20 Dec 1973
		AU 4157572 A	20 Dec 1973
		BE 782785 A4	30 Oct 1972
		BE 782786 A4	30 Oct 1972
		BR 7202650 D0	07 Jun 1973
		BR 7202654 D0	07 Jun 1973
		CA 982092 A1	20 Jan 1976
		CA 982093 A1	20 Jan 1976
		CH 602433 A5	31 Jul 1978
		DE 2220252 A1	04 Jan 1973
		DE 2220252 B2	17 Jan 1974
		DE 2220252 C3	08 Aug 1974
		DE 2220253 A1	16 Nov 1972
		DE 2220253 B2	09 Oct 1975
		DE 2264459 A1	31 Jan 1974
		ES 402242 A2	16 Feb 1977
		ES 402242 A6	15 Mar 1977
		ES 402243 A2	16 Feb 1977
		ES 402243 A6	15 Mar 1977
		FR 2137512 A2	29 Dec 1972
		FR 2137512 B2	17 Aug 1979
		FR 2186853 A6	11 Jan 1974
		GB 1379688 A	08 Jan 1975
		GB 1385056 A	26 Feb 1975

INTERNATIONAL SEARCH REPORT
Information on patent family members

International application No.
PCT/IL2014/050600

Patent document cited search report	Publication date	Patent family member(s)	Publication Date
		IT 954491 B	30 Aug 1973
		IT 954492 B	30 Aug 1973
		LU 65262 A1	30 Oct 1973
		LU 65264 A1	30 Oct 1973
		NL 7205838 A	01 Nov 1972
		NL 7205839 A	01 Nov 1972
		SE 394952 B	25 Jul 1977
		SE 394952 C	03 Nov 1977
		SE 394953 B	25 Jul 1977
		SE 394953 C	03 Nov 1977
		ZA 7202847 A	28 Feb 1973
		ZA 7202848 A	28 Mar 1973
US 3672545 A	27 Jun 1972	US 3672545 A	27 Jun 1972
		AR 210833 A1	30 Sep 1977
		AT 312496 B	10 Jan 1974
		BE 768039 A1	03 Dec 1971
		CA 941800 A1	12 Feb 1974
		CA 960191 A1	31 Dec 1974
		CH 543428 A	31 Oct 1973
		DE 2127652 A1	16 Dec 1971
		DE 2127652 B2	07 Feb 1974
		DE 2127652 C3	22 Aug 1974
		DE 2166148 A1	03 May 1973
		DE 2166148 B2	21 Nov 1974
		DE 2166148 C3	07 Aug 1975
		DK 141593 B	05 May 1980
		DK 141593 C	13 Oct 1980
		ES 391878 A1	16 Jun 1974
		ES 406746 A1	01 Oct 1975
		FR 2094133 A1	04 Feb 1972

INTERNATIONAL SEARCH REPORT
Information on patent family members

International application No.
PCT/IL2014/050600

Patent document cited search report	Publication date	Patent family member(s)	Publication Date
		FR 2094133 B1	08 Jun 1973
		GB 1331329 A	26 Sep 1973
		HK 77276 A	17 Dec 1976
		LU 63272 A1	22 Jan 1973
		NL 7107655 A	13 Dec 1971
		NL 150693 B	15 Sep 1976
		NO 131576 B	17 Mar 1975
		NO 131576 C	25 Jun 1975
		SE 394951 B	25 Jul 1977
		SE 394951 C	03 Nov 1977
		US 3733031 A	15 May 1973
		ZA 7103591 A	31 Jan 1973
WO 9007351 A1	12 Jul 1990	WO 9007351 A1	12 Jul 1990
		AU 4947590 A	01 Aug 1990
		DK 6589 D0	06 Jan 1989
		DK 65989 D0	10 Feb 1989
		DK 479189 D0	28 Sep 1989
US 5248493 A	28 Sep 1993	US 5248493 A	28 Sep 1993
		AT 114460 T	15 Dec 1994
		AU 630669 B2	05 Nov 1992
		AU 5008390 A	29 Aug 1991
		CA 1338438 C	09 Jul 1996
		DE 68919642 D1	12 Jan 1995
		DE 68919642 T2	18 May 1995
		DK 419889 D0	25 Aug 1989
		DK 419889 A	28 Feb 1990
		DK 175836 B1	21 Mar 2005
		EP 0365119 A2	25 Apr 1990
		EP 0365119 A3	22 Nov 1990

INTERNATIONAL SEARCH REPORT
Information on patent family members

International application No.
PCT/IL2014/050600

Patent document cited search report	Publication date	Patent family member(s)	Publication Date
		EP 0365119 B1	30 Nov 1994
		ES 2064447 T3	01 Feb 1995
		GB 8820398 D0	28 Sep 1988
		GR 3014981 T3	31 May 1995
		IE 892745 L	27 Feb 1990
		IE 65899 B1	29 Nov 1995
		JP H02142729 A	31 May 1990
		JP 2916170 B2	05 Jul 1999
		PT 91549 A	08 Mar 1990
		PT 91549 B	06 Jul 1995
US 3926343 A	16 Dec 1975	US 3926343 A	16 Dec 1975
		AR 210252 A1	15 Jul 1977
		AT A869274 A	15 Dec 1977
		AT 345154 B	11 Sep 1978
		AU 7486674 A	06 May 1976
		BE 821667 A1	30 Apr 1975
		BR 7409126 A	11 May 1976
		CA 1008033 A1	05 Apr 1977
		CH 588896 A5	15 Jun 1977
		DE 2451367 A1	22 May 1975
		DE 2451367 B2	01 Mar 1979
		DE 2451367 C3	18 Oct 1979
		DE 2462461 A1	08 Jun 1977
		DK 566374 A	07 Jul 1975
		DK 142132 B	08 Sep 1980
		DK 142132 C	02 Feb 1981
		ES 431503 A1	01 Feb 1977
		FR 2257352 A1	08 Aug 1975
		FR 2257352 B1	27 Jun 1980
		GB 1493614 A	30 Nov 1977

INTERNATIONAL SEARCH REPORT
Information on patent family members

International application No.
PCT/IL2014/050600

Patent document cited search report	Publication date	Patent family member(s)	Publication Date
		GB 1493615 A	30 Nov 1977
		IT 1032113 B	30 May 1979
		JP S5078912 A	27 Jun 1975
		NL 7414127 A	02 May 1975
		SE 7413599 A	02 May 1975
		SE 7413599 L	02 May 1975
		US 3861564 A	21 Jan 1975
		US 3878973 A	22 Apr 1975
		US 3904124 A	09 Sep 1975
		US 3921857 A	25 Nov 1975
		US 3923202 A	02 Dec 1975
		US 3982668 A	28 Sep 1976
		ZA 7406979 A	26 Nov 1975

INTERNATIONAL SEARCH REPORT

International application No.

PCT/IL2014/050600

A. CLASSIFICATION OF SUBJECT MATTER:

IPC (2014.01) A61M 15/00, A61M 11/02, B65D 83/06, B65D 83/16, B65D 83/28, B65D 83/52, B65D 83/62, B65D 83/64, B05B 1/02, B05B 11/06