(12) STANDARD PATENT (11) Application No. **AU 2012201383 B2**
(19) AUSTRALIAN PATENT OFFICE

(54) Title
Method for thermal management of an electric power conversion installation and installation for implementing the method

(51) International Patent Classification(s)
F24F 11/053 (2006.01) ***F24J 3/00*** (2006.01)

(21) Application No: **2012201383** (22) Date of Filing: **2012.03.08**

(30) Priority Data

(31) Number	(32) Date	(33) Country
11 00749	**2011.03.11**	**FR**

(43) Publication Date: **2012.09.27**
(43) Publication Journal Date: **2012.09.27**
(44) Accepted Journal Date: **2014.05.29**

(71) Applicant(s)
Schneider Electric Industries SAS

(72) Inventor(s)
Moreau, Julien;Radu, Daniel

(74) Agent / Attorney
Watermark Patent and Trade Marks Attorneys, Level 2 302 Burwood Road, HAWTHORN, VIC, 3122

(56) Related Art
EP 2026404

2012201383 08 Mar 2012

ABSTRACT

METHOD FOR THERMAL MANAGEMENT OF AN ELECTRIC POWER CONVERSION INSTALLATION AND INSTALLATION FOR IMPLEMENTING THE METHOD.

An operating method applies to an electric power conversion installation (1) comprising an enclosure (30) in which a voltage converter (7) and a power electronics device (2) are arranged. The operating method comprises implementation of different routings of a heat transfer fluid according to the operating state of the power electronics device and/or according to the thermal environment in which the installation is located. The electric power conversion installation (1) comprises an enclosure (30) provided with a first compartment (6) in which a voltage converter (7) is arranged and provided with a second compartment (3) in which a power electronics device (2) is arranged. The installation comprises hardware means (11, 12, 13, 14, 15, 16, 17, 18) and/or software means for implementing the operating method according to one of the foregoing claims.

Figure 1.

2012201383 08 Mar 2012

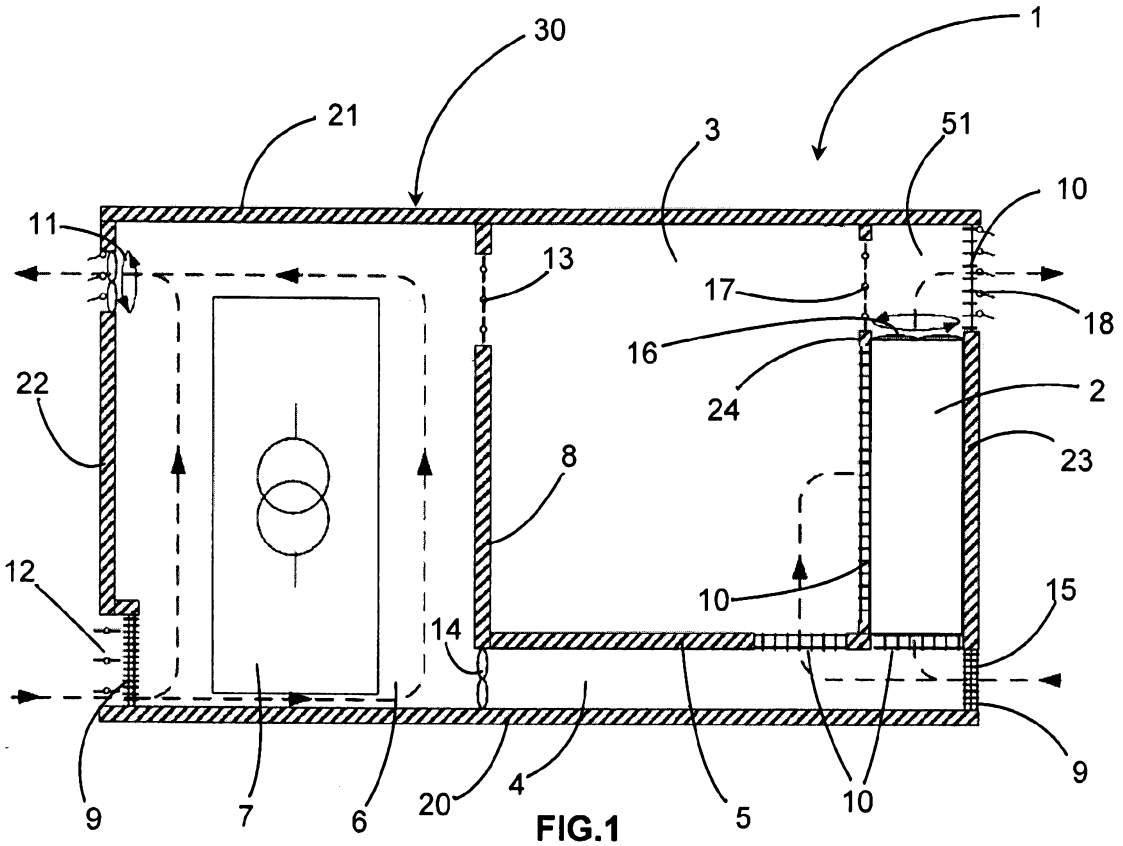

FIG.1

2012201383 08 Mar 2012

P001
Section 29
Regulation 3.2(2)

AUSTRALIA

Patents Act 1990

COMPLETE SPECIFICATION

STANDARD PATENT

Application Number:

Lodged:

Invention Title: Method for thermal management of an electric power conversion installation and installation for implementing the method

The following statement is a full description of this invention, including the best method of performing it known to us:

20122013830 08 Mar 2012

METHOD FOR THERMAL MANAGEMENT OF AN ELECTRIC POWER CONVERSION INSTALLATION AND INSTALLATION FOR IMPLEMENTING THE METHOD.

BACKGROUND OF THE INVENTION

The present invention relates to an operating method or a method for thermal management of an electric power conversion installation. It also relates to an electric power conversion installation implementing such a method. It lastly relates to a computer program comprising computer code means suitable for execution of steps of the method.

STATE OF THE ART

The invention applies in particular to electric power supply sub-stations for high-power industrial applications integrating power electronics devices.

In most electric power distribution rooms equipped with transformers and medium-voltage and/or low-voltage panels, forced ventilation is used to remove the heat dissipated by the equipment. This ventilation is controlled according to the temperature inside the room. Heating resistances are also provided to keep an acceptable temperature level for the equipment and condensation problems in case the outside temperature is very low and/or the power dissipated by the equipment is not sufficient to keep the temperature in the room at a sufficient level. If forced ventilation becomes insufficient (very hot climatic conditions, very great dissipated power), an air-conditioning unit is used to maintain an acceptable temperature in the room. Generally speaking, in applications where power electronics devices are used, such as data storage centres for example, it is usual to air-condition the premises to dissipate losses.

2012201383 09 May 2014

In the case of certain power electronics devices, use is made of a heat transfer fluid to collect the heat in the vicinity of the static switches and to remove it either directly with an air exchanger or with an iced water production unit.

These different solutions present certain drawbacks:

- heating resistances, like air-conditioning, are large electric power consumers and no longer correspond to the energy efficiency criteria demanded today;
- the use of air-conditioning is not very dependable and gives rise to maintenance problems in addition to high investment costs,
- the use of a heat transfer fluid requires the use of a fluid network that is hardly compatible with the proximity of electric equipment.

Any discussion of documents, devices, acts or knowledge in this specification is included to explain the context of the invention. It should not be taken as an admission that any of the material formed part of the prior art base or the common general knowledge in the relevant art in Australia on or before the priority date of the claims herein.

Comprises/comprising and grammatical variations thereof when used in this specification are to be taken to specify the presence of stated features, integers, steps or components or groups thereof, but do not preclude the presence or addition of one or more other features, integers, steps, components or groups thereof.

SUMMARY OF THE INVENTION

It would be desirable to provide an electric power conversion installation enabling the problems brought up in the foregoing to be remedied and improving known installations of the state of the art. In particular it would be desirable to provide an installation that is simple, economic and efficient.

2012201383 09 May 2014

It would also be desirable to provide an operating method of a conversion installation enabling the energy efficiency to be optimized while at the same time minimizing energy losses at the level of the installation.

A first aspect of the invention relates to an operating method of an electric power conversion installation, the installation including an enclosure in which a voltage converter and a power electronics device are arranged, said operating method including implementation of different routings of a heat transfer fluid according to the operating state of the power electronics device and/or according to the thermal environment in which the installation is located.

In a particular embodiment of the operating method, an on state and a standby state can be distinguished in the operating state of the power electronics device, and a high thermal state, in particular when the temperature of the environment is higher than a first threshold, and a low thermal state, in particular when the temperature of the environment is lower than the first threshold, can be distinguished in the thermal environment.

A first routing of the heat transfer fluid enabling the thermal energy of the voltage converter to be dissipated to the outside of the enclosure when the power electronics device is on and/or when the thermal state of the environment is high is preferably implemented in the operating method.

A second routing of the heat transfer fluid enabling the thermal energy of the voltage converter to be dissipated in the power electronics device when the power electronics device is on standby and when the thermal state of the environment is low is preferably implemented in the operating method.

A third routing of the heat transfer fluid enabling the thermal energy of the power electronics device to be dissipated to the outside of the enclosure when the power electronics device is in operation is preferably implemented in the operating method.

2012201383 09 May 2014

Recirculation of a fraction of the heat transfer fluid, at the level of the power electronics device, in the third routing is advantageously implemented in the operating method when the thermal state of the environment is low.

A second aspect of the invention relates to an electric power conversion installation including an enclosure provided with a first compartment in which a voltage converter is arranged and provided with a second compartment in which a power electronics device is arranged, the installation includes hardware

THE REMAINDER OF THIS PAGE HAS BEEN INTENTIONALLY LEFT BLANK.

THE NEXT PAGE IS PAGE 4.

20122013830 08 Mar 2012

and/or software means for implementing the operating method as defined above.

The hardware means preferably comprise a first opening between the outside and the first compartment and a second opening between the outside and the first compartment, the first and second openings enabling the first routing of heat transfer fluid between the outside and the voltage converter.

The hardware means preferably comprise a third opening between the outside and the second compartment and a fourth opening between the outside and the second compartment, the third and fourth openings enabling the third routing of heat transfer fluid between the outside and the power electronics device.

The hardware means preferably comprise a fifth opening between the first compartment and the second compartment and a sixth opening between the first compartment and the second compartment, the fifth and sixth openings enabling the second routing of heat transfer fluid between the voltage converter and the power electronics device.

The hardware means preferably comprise a raised floor in the second compartment, said raised floor being designed to channel the heat transfer fluid.

The hardware means preferably comprise a hood in the second compartment, in particular a hood designed to collect the heat transfer fluid that has flowed at the level of the power electronics device.

The voltage converter is advantageously of Medium-Voltage/Low-Voltage type and the power electronics device is of Low-Voltage type.

2012201383 08 Mar 2012

The voltage converter is advantageously of Medium-Voltage/Medium-Voltage type and the power electronics device is of Medium-Voltage type.

A computer program according to the invention comprises software code means suitable for execution of steps of the above method when the program is executed on a computer.

BRIEF DESCRIPTION OF THE DRAWINGS

The appended drawings represent, for example purposes, an embodiment of an installation according to the invention and a mode of execution of an operating method according to the invention.

Figure 1 is a cross-sectional view of an embodiment of an installation according to the invention, the installation operating according to a first operating mode.

Figure 2 is a cross-sectional view of an embodiment of an installation according to the invention, the installation operating according to a second operating mode.

Figure 3 is a cross-sectional view of an embodiment of an installation according to the invention, the installation operating according to a third operating mode.

Figure 4 is a cross-sectional view of an embodiment of an installation according to the invention, the installation operating according to a fourth operating mode.

Figure 5 is a process flowchart of a mode of execution of an operating method according to the invention.

2012201383 08 Mar 2012

DETAILED DESCRIPTION OF PREFERRED EMBODIMENTS

An embodiment of an installation according to the invention is described in the following with reference to figures 1 to 5.

The installation is designed to be located outdoors. It comprises an enclosure, which is for example prefabricated and may be movable, in which the electric components of the installation are placed. For this installation to be able to be placed in the majority of geographic areas, the installation therefore has to be able to operate over a wide range of ambient temperatures (for example comprised between -30° and + 40°C). Outside this range, it is possible to use an installation having particular features.

The installation has to present a high index of protection IP to be insensitive to rain and not to stir particles able to be detrimental to the electric components. The installation can be placed close to the sea. In this case, salt filters also have to be provided to protect the electric components.

In this type of installation, the most sensitive components are the power electronics devices. In general, this type of component is dimensioned to operate at temperatures comprised between 0 and +40°C. The upper limit is imposed by the maximum thermal resistance of static switches. The lower limit is imposed by two different phenomena:

- the behaviour of static switches: at low temperature, static switches switch faster and generate voltage surges which may be destructive;
- the performances of the heat transfer fluid internal to the components are impaired at low temperature.

These phenomena occur during the rest phase of power electronics devices just before they are switched on. Self-heating of static switches then suffices to prevent these phenomena.

2012201383 08 Mar 2012

It can therefore be clearly seen that, taking account of the operating conditions sought for, four operating modes are necessary giving rise to contrary problematic situations:

- in hot periods and in operation (for example +40°C ambient), the air flowing at the level of the installation has to remain below 40°C;
- in hot periods and in shutdown phase (for example +40°C ambient), the air contained in the enclosure has to remain at an acceptable temperature for the installation (for example less than 45°C);
- in cold periods (for example -30°C) during shutdown phases, the temperature in the enclosure has to be able to be maintained or increased for correct operation on restart;
- in cold periods (for example -30°C) and in operation, the air flowing at the level of the installation has to remain at an acceptable temperature (for example 0°C).

To enable management of the thermal energy in the installation, the installation 1 comprises an enclosure 30 or a room. This room comprises a top wall 21, a bottom wall 20 and side walls 22 and 33. The room comprises a first compartment 6 and a second compartment 3. The first compartment is designed to accommodate a voltage converter 7. The second compartment is designed to accommodate the power electronics device 2. The first compartment 6 is separated from the second compartment 3 so that the heat generated by the voltage converter 7 does not disturb cooling of the power electronics device. The second compartment further preferably comprises a raised floor 5 and/or a hood 51 above the power electronics device.

It should also be noted that the first compartment comprises a fan or an assembly of several fans 11 to make a heat transfer fluid external to the room, such as air, circulate according to a first routing inside the first compartment. In this way, thermal energy can be exchanged between the inside of the first

20122013830 08 Mar 2012

compartment, in particular between the voltage converter 7 and the outside of the room. This heat transfer fluid circulation takes place via a first opening 12, provided with a flap, in the side wall 22, and via a second opening at the level of the fan 11. For example, if the heat transfer fluid enters the first compartment at the level of the opening 12, this first opening is equipped with a filter 9. Thus, when the flap of the opening 12 is opened and the fan 11 is started up, the heat transfer fluid enters the first compartment at the level of the opening 12, flows in the first compartment around the voltage converter, and then exits from the first compartment at the level of the second opening associated with the fan 11.

In symmetric manner, the second compartment comprises a fan 16 to make a heat transfer fluid external to the room, such as air, circulate according to a routing inside the second compartment. In this way, thermal energy can be exchanged between the inside of the second compartment, in particular between the power electronics device 2 and the outside of the room. This heat transfer fluid circulation takes place via a third opening 15, in the side wall 23, and via a fourth opening 18 in the side wall 23. For example, if the heat transfer fluid enters the second compartment at the level of the opening 15, this opening is equipped with a filter 9. Thus, when the opening 18 is opened and the fan 16 is started up, the heat transfer fluid enters the second compartment at the level of the opening 15, flows in the second compartment, around and in the power electronics device, and then in the hood 51, then exits from the second compartment at the level of the opening 18.

The opening 15 is advantageously located underneath the raised floor 5 and openings are provided, in particular underneath the power electronics device, to enable the heat transfer fluid to pass from the volume under the raised floor to the frequency converters and to the rest of the second compartment. For example, the fan 16 is fitted just above the power electronics device. The heat transfer fluid can preferably flow in the rest of the second compartment after

2012201383 08 Mar 2012

flowing in the volume under the raised floor and before flowing around and in the power electronics device.

As a variant, the opening 15 is not directly at the level of the raised floor but is located on one or more external surfaces of the second compartment 3 and thus enables a direct air flow between the outside and the inside of the second compartment 3, particularly in the case where the raised floor does not exist.

As another variant, the opening 15 is split into several openings - at the level of the raised floor and on one or more external surfaces of the second compartment 3.

At the level of the hood, a flap 17 is advantageously provided to enable communication between the hood and the rest of the second compartment.

A partition 8 further separates the first and second compartments. This partition comprises a fifth opening provided with a flap 13 and a sixth opening associated with a fan 14. One of the fifth and sixth openings is preferably made between the first compartment and the volume of the second compartment located underneath the raised floor.

In this way, when the flap 13 is opened and the fan 14 is started up, the heat transfer fluid coming from the second compartment enters the first compartment at the level of the opening 13, flows around the voltage converter in the first compartment, and then exits the first compartment at the level of the opening associated with the fan 14 to return to the second compartment. A heat exchange between the voltage converter 7 and the power electronics device 2 can thus be achieved by a heat transfer fluid routing.

2012201383 08 Mar 2012

In the figures, the elements referenced 9 are filters, in particular filters presenting a high index of protection IP and/or comprising a salt filter. The elements referenced 10 are grates presenting a lower index of protection IP.

The flaps 12, 13 and 17 are preferably of motor-powered type.

The main thermal constraint is imposed by the power electronics device which has to be permanently ventilated with a heat transfer fluid the temperature of which does not exceed 40°C. It is moreover the power electronics device that generates the most thermal losses for an installation as described in the foregoing.

The installation comprises all the hardware and/or software means for implementing the operating method or the thermal management method that is the object of the invention. In particular, the installation comprises hardware and/or software means for implementing each of the steps of the method that is the object of the invention and enabling each of these steps to be articulated logically and/or temporally. Although it is not represented, the installation comprises a logic processing unit enabling the different items of equipment to be controlled, in particular the motor-powered flaps 12, 13 and 17 and fans 11, 16 and 14. The installation advantageously further comprises sensors enabling the state of operation of the installation, in particular the state of operation of the power electronics device, to be determined, and sensors enabling the thermal state of the environment in which the installation is located to be determined.

A mode of execution of the operating method of the installation according to the invention is described in the following with reference to figure 5.

In a first step 100, the thermal state of the environment in which the installation is located is tested. If the thermal state of the environment is high, we go on to

20122013830 08 Mar 2012

step 110. If the thermal state of the environment is low, we go on to step 120. For example, the thermal state of the environment is considered to be high if the temperature outside the enclosure 30 is higher than a first threshold, for example 0°C, and the thermal state of the environment is considered to be low if the temperature outside the enclosure is lower than this first threshold.

In step 110, it is tested whether the power electronics device is on standby or in operation. If the power electronics device is in operation, the installation is configured as described in the following with reference to figure 1.

In this configuration, the flap 12 is open, the flap 13 is closed, the fan 14 is off, the fan 16 is on and the flap 17 is closed. Moreover, the fan 11 can be activated with different levels. So long as the temperature inside the first compartment is not too high, the fan 11 can be off. It is switched on to prevent the temperature of the first compartment from exceeding a threshold, for example 40°C. For this purpose, it can be put into operation at different speeds.

Thus, in the first compartment, air external to the enclosure is inlet via the flap 12, flows around the voltage converter, and is then discharged to the outside by the fan 11. This enables the voltage converter to be cooled. In the second compartment, air external to the enclosure is inlet via the opening 15, flows around and in the power electronics device, and is then discharged to the outside by the fan 16 through the flap 18. This enables the power electronics device to be cooled.

If the power electronics device is on standby, the installation is configured as described in the following with reference to figure 2.

In this configuration, the flap 12 is open, the flap 13 is closed, the fan 14 is off and the flap 17 is closed. Moreover, the fan 11 can be activated with different

2012201383 08 Mar 2012

levels. So long as the temperature inside the first compartment is not too high, the fan 11 can be off. It is switched on to prevent the temperature of the first compartment from exceeding a threshold, for example 40°C. For this purpose, it can be put into operation at different speeds. Likewise, so long as the temperature inside the second compartment is not too high, the fan 16 can be off. It is switched on to prevent the temperature of the second compartment from exceeding a threshold, for example 40°C. For this purpose, it can be put into operation at different speeds.

Thus, in the first compartment, air external to the enclosure is inlet via the flap 12, flows around the voltage converter, and is then discharged to the outside by the fan 11. This enables the voltage converter to be cooled. In the second compartment, air external to the enclosure is inlet via the opening 15, flows around the power electronics device, and is then discharged to the outside by the fan 16 through the flap 18. This enables the second compartment to be cooled only if the temperature in the second compartment becomes too high.

In step 120, it is tested whether the power electronics device is on standby or in operation. If the power electronics device is on standby, the installation is configured as described in the following with reference to figure 3.

In this operating mode it is necessary to maintain an acceptable temperature in the enclosure, particularly near to the power electronics device. For this, with a concern for efficiency, the invention enables the heat losses of the voltage converter 7 of the first compartment 6, that remained connected to the power grid, to be used to increase the temperature of the second compartment 3.

In this configuration, the flap 12 is closed, the flap 13 is open, the fan 14 is on, the fan 11 is off and the flap 17 is open. The fan 16 is preferably off, but can be used (for example at low speed) to force circulation of the air flow in the power electronics device.

2012201383 08 Mar 2012

Thus, in the first compartment, air internal to the enclosure is inlet via the flap 13 from the second compartment, flows around the voltage converter and is heated by the heat losses of the voltage converter 7, and is then discharged to the second compartment by the fan 14. The air therefore then heats the power electronics device 2. This enables the heat losses of the voltage converter to be used to heat the power electronics device. A thermal coupling is thus made between the voltage converter and the power electronics device.

In this configuration, to increase the efficiency of the installation, all the air inlets (for example the opening 15) could be closed. At the level of the discharge openings 18 and 11, overpressure valves are for example used.

If the power electronics device is on, the installation is configured as described in the following with reference to figure 4.

In this configuration, the flap 12 is open, the flap 13 is closed, the fan 14 is off and the flap 17 is open. Moreover, the fan 11 can be activated with different levels. So long as the temperature inside the first compartment is not too high, the fan 11 can be off. It is switched on to prevent the temperature of the room from exceeding a threshold, for example 40°C. For this purpose, it can be put into operation at different speeds. In the second compartment, the fan 16 and/or flap 17 are controlled so that the temperature of the air flowing around the power electronics device is for example comprised between 0° and 20 °C. To do this, the air flow extracted from the power electronics device is broken down into two parts : a first part that enters via the opening 15, flows around and in the power electronics device and is then discharged to the outside via the opening 18 in an extracted flow; and a second part which flows in the second compartment and then in the power electronics device, and is then discharged into the second compartment via the flap 17 in a recirculation flow. The mixture of these two flows thereby enables the power electronics device to

2012201383 08 Mar 2012

be cooled using the outside air, while at the same time preserving an acceptable temperature for the components in the second compartment 3.

The temperature of the second compartment will depend on the equilibrium between the extracted flow and the recirculation flow. To regulate the equilibrium of these flows, three solutions can be envisaged.

A first solution consists in controlling opening of the flap 17 and therefore the pressure drop at the level of the flap 17, the difference between the pressure drop at the level of the flap 17 and the pressure drop at the level of the flap 18 fixing the recirculation rate.

A second solution consists in making the flap 17 from several elements, opening of which is able to be controlled independently from one another. Several regulation stages are thus obtained.

A third solution consists in opening the flap 17 and in controlling the speed of the fan 16. The flap 17 being open and the flap 18 opening according to the pressure prevailing in the hood, it is possible to make more or less air recirculate according to the speed of the fan 16.

Thus, in the first compartment, air external to the enclosure is inlet via the flap 12, circulates around the voltage converter, and is then discharged to the outside by the fan 11. This enables the voltage converter to be cooled. In the second compartment, air external to the enclosure is inlet via the opening 15, flows around and in the power electronics device and is then partially discharged to the outside by the fan 16 through the flap 18 and partially forced to recirculate in the second compartment and around the power electronics device. This enables the power electronics device to be cooled while at the same time preserving an acceptable temperature in the second compartment.

2012201383 08 Mar 2012

In other embodiments not represented in the figures, the hardware means comprise a direct opening between the second compartment and the outside of the enclosure as a supplement to the flow passing via the raised floor. The hardware means can likewise have at least one direct opening between the second compartment and the outside of the enclosure without the presence of a raised floor.

2012201383 09 May 2014

THE CLAIMS DEFINING THE INVENTION ARE AS FOLLOWS:

1. An operating method of an electric power conversion installation, the installation including an enclosure in which a voltage converter and a power electronics device are arranged, wherein said operating method includes implementation of different routings of a heat transfer fluid according to the operating state of the power electronics device and/or according to the thermal environment in which the installation is located.

2. The operating method according to claim 1, wherein an on state and a standby state can be distinguished in the operating state of the power electronics device, and/or a high thermal state, in particular when the temperature of the environment is higher than a first threshold, and a low thermal state, in particular when the temperature of the environment is lower than the first threshold, can be distinguished in the thermal environment.

3. The operating method according to claim 2, wherein a first routing of the heat transfer fluid is implemented enabling the thermal energy of the voltage converter to be dissipated to the outside of the enclosure when the power electronics device is on and/or when the thermal state of the environment is high.

4. The operating method according to either claim 2 or 3, wherein a second routing of the heat transfer fluid is implemented enabling the thermal energy of the voltage converter to be dissipated in the power electronics device when the power electronics device is on standby and when the thermal state of the environment is low.

5. The operating method according to any one of claims 2 to 4, wherein a third routing of the heat transfer fluid is implemented enabling the thermal energy of the power electronics device to be dissipated to the outside of the enclosure when the power electronics device is in operation.

2012201383 09 May 2014

6. The operating method according to the foregoing claim, wherein recirculation of a fraction of the heat transfer fluid, at the level of the power electronics device, in the third routing is implemented when the thermal state of the environment is low.

7. An electric power conversion installation including an enclosure provided with a first compartment in which a voltage converter is arranged and provided with a second compartment in which a power electronics device is arranged, wherein the installation further includes hardware means and/or software means for implementing the operating method according to any one of the foregoing claims.

8. The installation according to claim 7, wherein the hardware means includes a first opening between the outside and the first compartment and a second opening between the outside and the first compartment, the first and second openings enabling the first heat transfer fluid routing between the outside and the voltage converter.

9. The installation according to either claim 7 or 8, wherein the hardware means includes a third opening between the outside and the second compartment and a fourth opening between the outside and the second compartment, the third and fourth openings enabling the third heat transfer fluid routing between the outside and the power electronics device.

10. The installation according to any one of claims 7 to 9, wherein the hardware means includes a fifth opening between the first compartment and the second compartment and a sixth opening between the first compartment and the second compartment, the fifth and sixth openings enabling the second heat transfer fluid routing between the voltage converter and the power electronics device.

2012201383 09 May 2014

11. The installation according to any one of claims 7 to 10, wherein the hardware means includes a raised floor in the second compartment, said raised floor being designed to channel the heat transfer fluid.

12. The installation according to any one of claims 7 to 10, wherein the hardware means includes a hood in the second compartment, in particular a hood designed to collect the heat transfer fluid that has flowed at the level of the power electronics device.

13. The installation according to any one of claims 7 to 12, wherein the voltage converter is of Medium-Voltage/Low-Voltage type and the power electronics device is of Low-Voltage type.

14. The installation according to any one of claims 7 to 12, wherein the voltage converter is of Medium-Voltage/Medium-Voltage type, and the power electronics device is of Medium-Voltage type.

15. A computer program including computer software code means suitable for execution of steps of the method according to any one of claims 1 to 6, when the program is executed on a computer.

16. An operating method of an electric power conversion installation, substantially as hereinbefore described with reference to the accompanying drawings.

17. An electric power conversion installation substantially as hereinbefore described with reference to the accompanying drawings.

SCHNEIDER ELECTRIC INDUSTRIES SAS

WATERMARK PATENT AND TRADE MARKS ATTORNEYS

P35716AU00

2012201383 08 Mar 2012

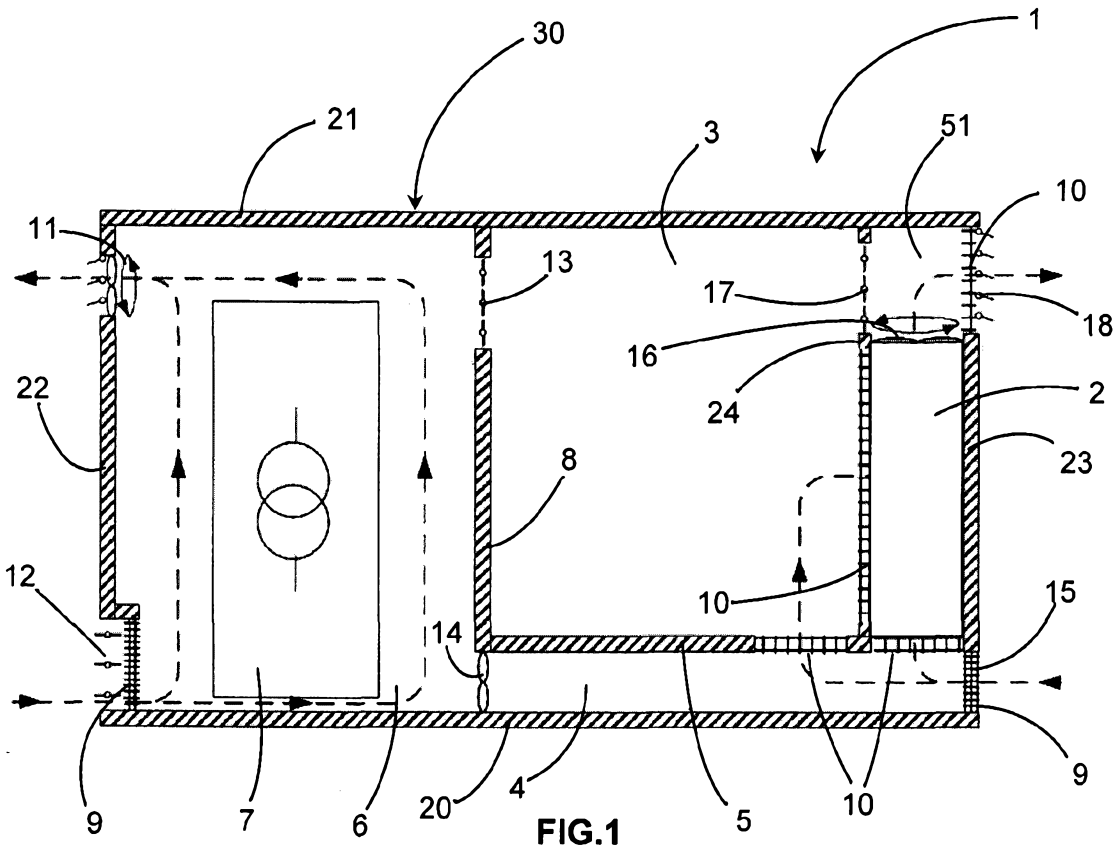

FIG.1

20122013 83 08 Mar 2012

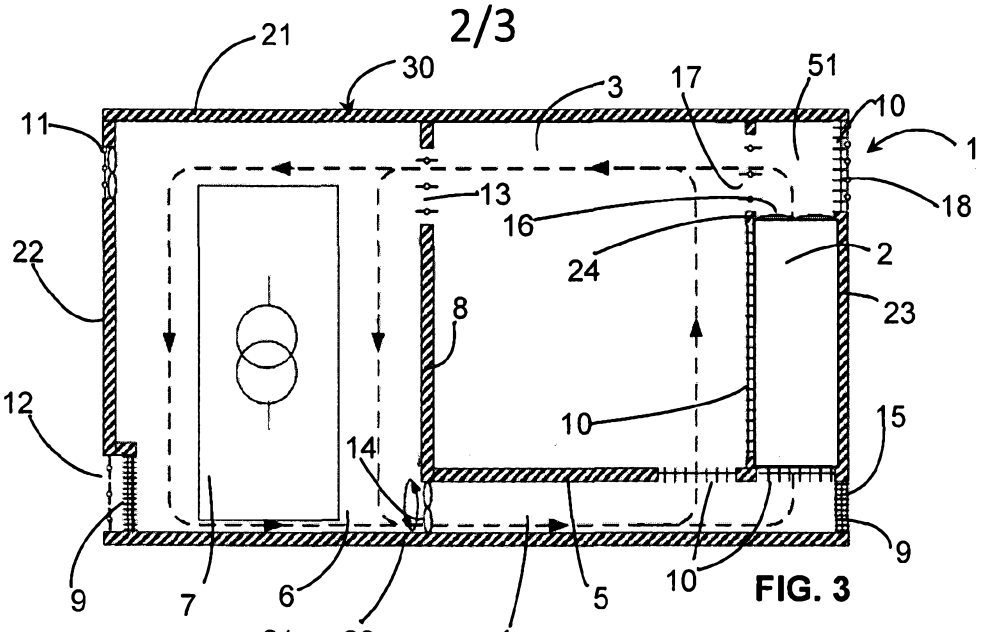

FIG. 3

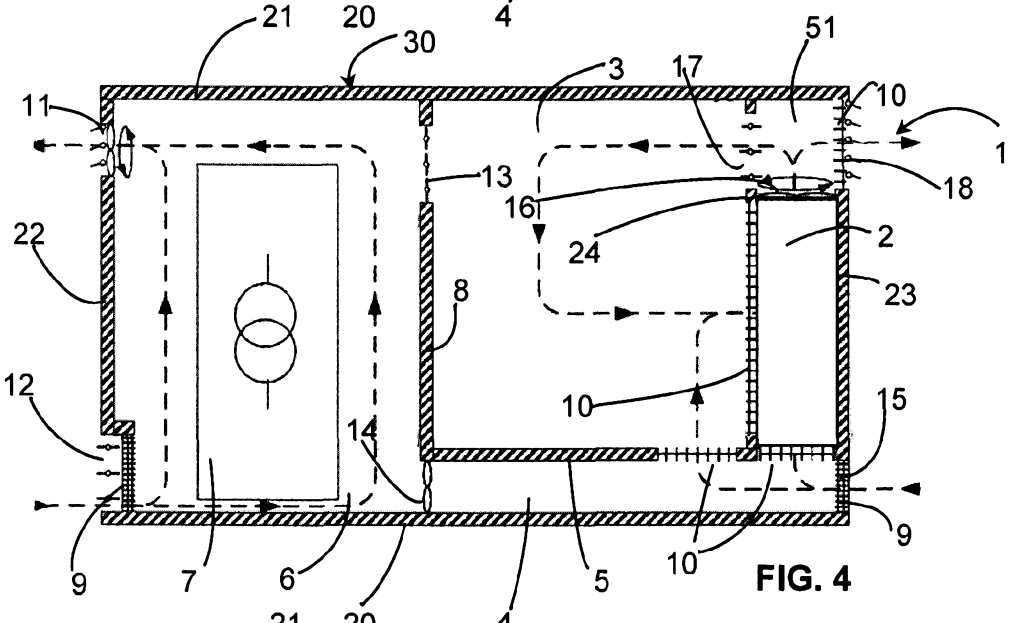

FIG. 4

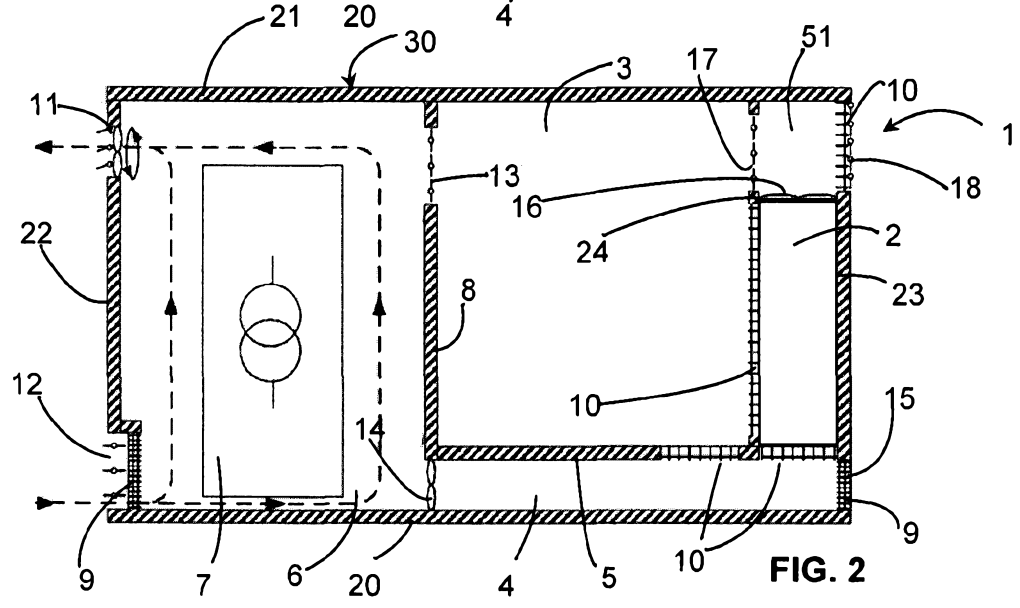

FIG. 2

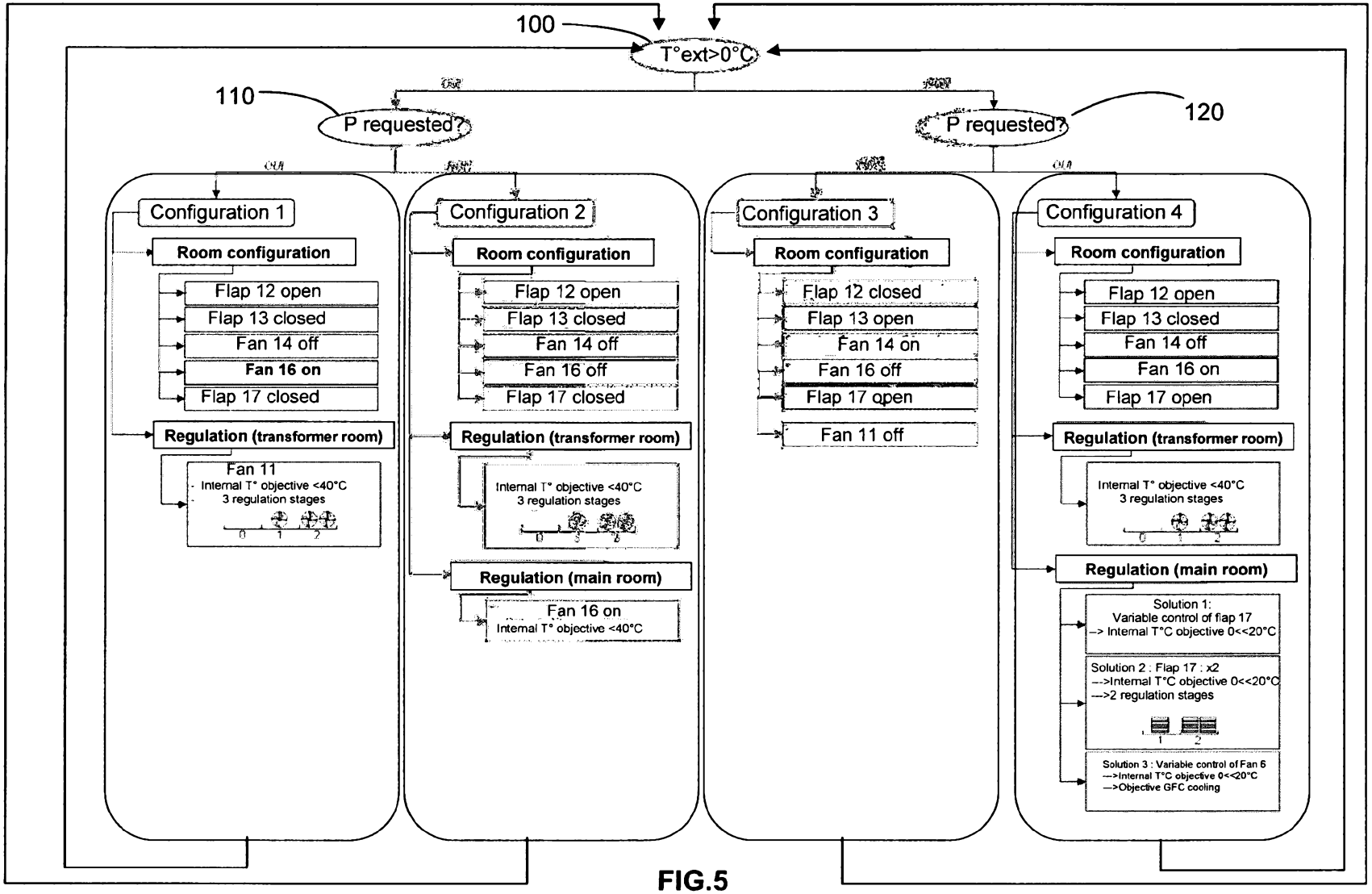
100
T°ext>0°C
110
P requested?
P requested?
120
Configuration 1
Room configuration
Flap 12 open
Flap 13 closed
Fan 14 off
Fan 16 on
Flap 17 closed
Regulation (transformer room)
Fan 11
- Internal T° objective <40°C
- 3 regulation stages
Configuration 2
Room configuration
Flap 12 open
Flap 13 closed
Fan 14 off
Fan 16 off
Flap 17 closed
Regulation (transformer room)
Internal T° objective <40°C
3 regulation stages
Regulation (main room)
Fan 16 on
Internal T° objective <40°C
Configuration 3
Room configuration
Flap 12 closed
Flap 13 open
Fan 14 on
Fan 16 off
Flap 17 open
Fan 11 off
Configuration 4
Room configuration
Flap 12 open
Flap 13 closed
Fan 14 off
Fan 16 on
Flap 17 open
Regulation (transformer room)
Internal T° objective <40°C
3 regulation stages
Regulation (main room)
Solution 1:
Variable control of flap 17
--> Internal T°C objective 0<<20°C
Solution 2 : Flap 17 : x2
-->Internal T°C objective 0<<20°C
-->2 regulation stages
Solution 3 : Variable control of Fan 6
-->Internal T°C objective 0<<20°C
-->Objective GFC cooling

FIG.5