Jan. 5, 1965 J. D. BOSTROM 3,164,478

DOUGHNUT PACKAGE

Filed Dec. 15, 1961

FIG. 1

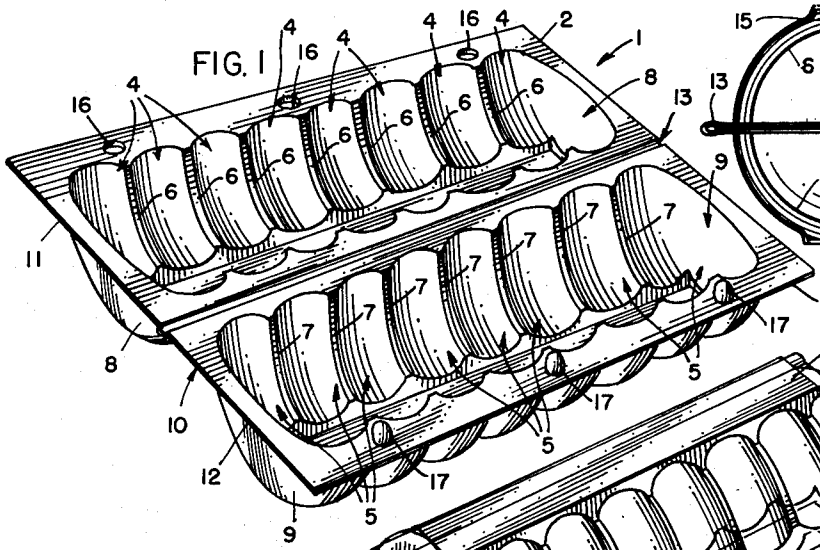

FIG. 7

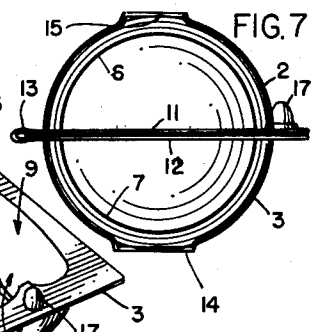

FIG. 2

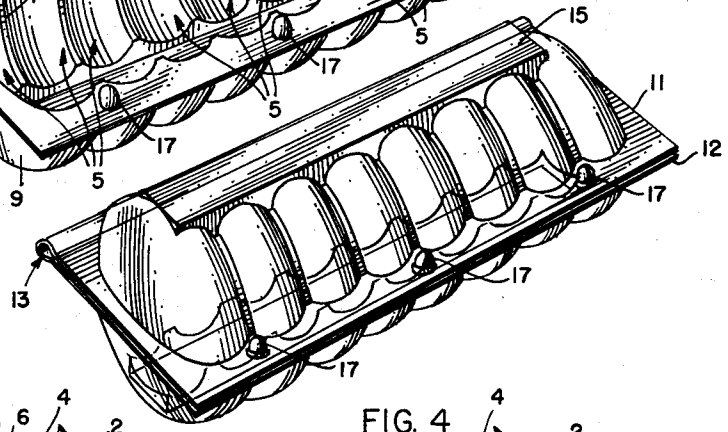

FIG. 3

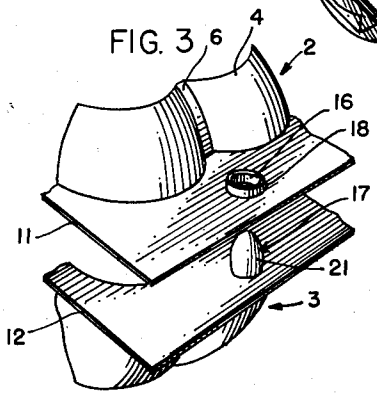

FIG. 4

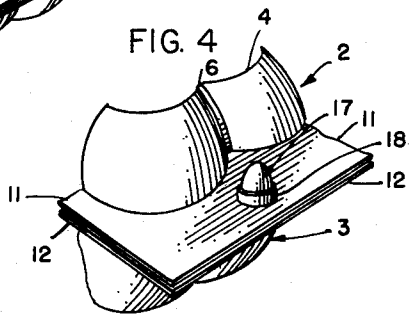

FIG. 5

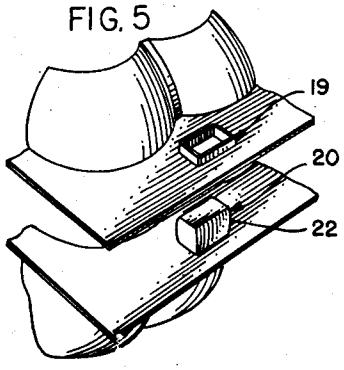

FIG. 6

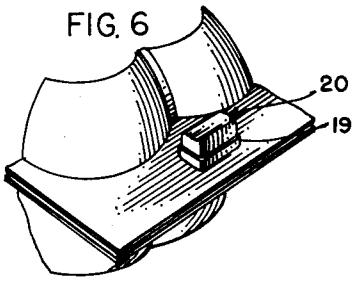

INVENTOR:
JOHN DONALD BOSTROM
BY Marzall, Johnston, Cook & Root
ATT'YS

United States Patent Office 3,164,478 Patented Jan. 5, 1965

3,164,478

DOUGHNUT PACKAGE

John Donald Bostrom, Niles, Ill., assignor to Poster Packaging, Inc., Chicago, Ill., a corporation of Delaware

Filed Dec. 15, 1961, Ser. No. 159,661
4 Claims. (Cl. 99—172)

This invention relates to a display package and more particularly to a display package for doughnuts wherein doughnuts are retained in a vertical position and any coating present on the doughnuts is also substantially preserved before the package is opened.

Because of their shape, doughnuts are rather difficult to package so that they can be properly displayed. In many cases also coatings are applied to doughnuts and such coatings are partially removed in handling the doughnuts or the packages containing them.

One of the objects of the present invention is to provide a new and improved display package which is especially suitable for packaging doughnuts. Another object of the invention is to provide a package of the type described in which the doughnuts are retained in a vertical position.

A further object of the invention is to provide a package of the type described in which coatings applied to the doughnuts are not substantially removed prior to opening the package.

Other objects and advantages of the invention will appear from the following description in conjunction with the accompanying drawing in which:

FIGURE 1 is a perspective view in open position of a display package provided in accordance with the invention;

FIGURE 2 is a perspective view of the package of FIGURE 1 after it has been closed;

FIGURE 3 is an enlarged perspective view of a part of the package of FIGURE 1 before it has been closed, illustrating the means used to secure or lock the top and bottom portions of the package together;

FIGURE 4 is similar to FIGURE 3 except that the top and bottom portions of the package have been brought together;

FIGURE 5 is similar to FIGURE 3 except that a different type of means is employed to secure or lock the top and bottom portions of the package; and

FIGURE 6 is similar to FIGURE 4 except that the means employed to secure the top and bottom portions of the package together is the same as that shown in FIGURE 5.

As shown by the drawings, the invention provides a display package comprising a blister-type top cover having grooves therein and a blister-type bottom having grooves therein, said grooves being adapted to receive doughnuts and retain them in an upright position and means securing said top cover and said bottom together.

The term "blister-type material" is used herein to describe a transparent plastic sheet material, preferably a material such as, for example, oriented polystyrene. This type of material is readily molded by vacuum forming and other techniques. It is self-sustaining, relatively rigid, resilient and distortable. However, when distorted, it can be pressed back into its original form.

In FIGURE 1 a display package 1 provided in accordance with the present invention is shown in open position. This package consists of a top cover 2 and a bottom 3. The top cover 2 contains a number of grooves 4 and the bottom 3 contains a number of grooves 5. The sides of the grooves 4 form partitions 6 and the sides of the grooves 5 form partitions 7. It will be noted, as shown in the drawings, that each of the grooves 4 are of compound curvature, i.e., they are arcuate relative to a plane

transverse to flange portions 11 and 12 when said transverse plane is taken parallel to the short dimension of the flange portion 11 and when taken parallel to the long dimension of flange 11. The same is true of grooves 5. The interior partitions 6 and 7 extend partially into the package as shown in FIGURE 7. The ends 8 of the top 2 and the ends 9 of the bottom 3 enclose the package and are integral with a flange 10 extending completely around the package.

The flange 10 consists of a flange portion 11 which extends entirely around the top cover of the package and a flange portion 12 which extends entirely around the bottom of the package. The flange portion 11 extends outwardly from the base of the grooves 6 in the top cover 2 and the flange portion 12 extends outwardly from the top of the grooves 7 in the bottom 3. The interior flange portions are integrally united and contain a groove 13 which forms a hinge between the top cover 2 and the bottom 3 whereby the top cover may be closed or opened by moving it around said hinge.

The bottom 3 is preferably provided with a flat portion 14 which extends longitudinally of the package beneath the bottoms of the grooves 7. Similarly, the top cover 2 is preferably provided with a flat portion 15 which extends longitudinally of the package above the tops of the grooves 6. The provision of these flat portions 14 and 15 is optional but desirable in order to prevent the package from rolling and to provide a suitable way of positioning the package in a predetermined position. The width of the flat portions 14 and 15 is subject to variation. They may be the same or different widths. As shown in the drawing it is preferable to have the flat portion 14 on the bottom of the package somewhat larger than the flat portion 15 on the top cover of the package.

The top cover of the package and the bottom are secured together in any suitable manner preferably by forming holes 16 in the outer flange portion along the length of the top cover 2 and by forming projections 17 in the outer part of the flange portion 12 lengthwise of the bottom 3. These projections 17 are adapted to engage the sides of the holes 16 and hold the top cover in place in the manner shown in FIGURES 2 and 7 when the package is closed. In forming the holes 16 it is preferable to integrally mold a lip or collar 18 or 19 as shown in FIGURES 3 and 5 which provides greater surface area for contact with the projections 17 and 20, respectively. When the projections 17 are inserted into the holes 16 the top cover 2 is secured to the lower bottom 3 and the flanges 11 and 12 are brought together in close proximity as shown in FIGURE 4. In order to assist in holding the top cover and the bottom together, it is preferable to undercut slightly the projections 17 at an intermediate point in the projections as generally shown at 21 in FIGURE 3. Similarly, where a rectangular projection is used as in FIGURES 5 and 6 it is preferable to provide an undercut portion generally shown at 22 in FIGURE 5.

The material which is used to form the container or package is sufficiently resilient so that the sides 18 and 19 of the openings will stretch over the respective projections 17 and 20 and will be retained in place by the undercut portions 21 and 22. When it is desired to open the package, the fingernail or a sharp instrument can be inserted between the flanges 11 and 12 and in this manner by applying suitable pressure the sides of the openings 18 and 19 can be stretched again to clear the projections 17 and 20, respectively. In this way the package can be opened and closed any number of times and can be reused by the purchasers as a receptacle.

In FIGURES 3 and 4, the sides of the openings and the cross section of the projections used to secure the top cover and the bottom of the package together are sub-

stantially circular while in FIGURES 5 and 6 the sides of the openings and the cross section of the projections used to secure the top cover and the bottom of the package together are substantially rectangular.

It will be recognized that other sizes and shapes of openings and projections may be used and that other types of fastening means may be employed to secure the top cover and the bottom of the package together. The number of grooves or compartments in the package is also subject to variation. The particular package shown in the drawing contains eight grooves or compartments but other packages have been made in a similar manner containing two, six and twelve grooves.

In addition to providing a package which retains the articles in the package in an upright position and displays them with a minimum loss of any coatings that they may contain, the invention is especially advantageous in providing a package in which the top cover and the bottom are integral and which is easily formed by molding a self-sustaining plastic material.

It will be recognized that other modifications and variations can be made in the package described without departing from the invention.

The invention is hereby claimed as follows:

1. A transparent plastic display package comprising an integrally molded blister type top covering having arcuate segmental grooves therein and a blister type bottom having arcuate segmental grooves therein, arcuate projection means coextensive with said grooves and having a diameter less than the major diameter of said grooves, said top and bottom grooves opposing one another and together with said projecting means providing separated substantially identical supporting compartments for doughnuts, a doughnut in each opposing pair of grooves retained in an upright position when the package is closed, said top cover having a flange portion extending outwardly from the base of the grooves therein and said bottom having a flange portion extending outwardly from the top of the grooves therein, said flange portions being integrally united with a longitudinal extending groove at their juncture, said groove facing inwardly when the package is closed and said flanges together with said groove forming a hinge between said top cover and said bottom, whereby said top cover may be opened and closed by moving it about said hinge, and means securing said top cover and said bottom cover together, said last named means comprising a flange extending outwardly from the base of the grooves in said top cover on a side other than the hinged side and a mating flange extending outwardly from the top of the grooves in said bottom, aperture means in one of said last named flanges and means forming a mating projection in the other of said last named flanges.

2. A package as claimed in claim 1 in which said mating projection is resilient and slightly larger than the aperture at its outer end and undercut between its outer end and its base, thereby permitting it to be inserted through said aperture by hand pressure and retained by the undercut portion engaging the sides of the aperture while also permitting removal of the projection from the aperture by hand pressure.

3. The package set forth in claim 1 wherein each arcuate segmental groove and said projection means in each of said top and bottom cover portions are interrupted by flat surfaces tangential to the opposite extremities of the outer diameters of said grooves and parallel to said flanges in said top cover and bottom.

4. The package set forth in claim 1 wherein said arcuate segmental grooves in each of said top cover and bottom are interrupted by flat surfaces, said flat surface in said bottom having a larger width dimension than the flat surface in said top cover.

References Cited by the Examiner

UNITED STATES PATENTS

563,675	7/96	Mullins	99—172
2,091,126	8/37	Speer.	
2,368,797	2/45	Bailar	99—172
2,715,458	8/55	Polglase	229—2.5 X
2,885,136	5/59	Grant	229—2.5
2,915,214	12/59	Frankel	229—2.5 X
2,971,685	2/61	Treida	229—2.5
2,974,842	3/61	Reifers	229—2.5
3,128,030	4/64	Davies.	

A. LOUIS MONACELL, *Primary Examiner.*

EARL J. DRUMMOND, ABRAHAM H. WINKELSTEIN, RAYMOND N. JONES, *Examiners.*