(12) INTERNATIONAL APPLICATION PUBLISHED UNDER THE PATENT COOPERATION TREATY (PCT)

(19) World Intellectual Property Organization
International Bureau

(43) International Publication Date
27 December 2007 (27.12.2007)

PCT

(10) International Publication Number
WO 2007/149001 A2

(51) International Patent Classification:
*H01L 31/052* (2006.01) *H01L 31/048* (2006.01)
*H01L 31/042* (2006.01)

(21) International Application Number:
PCT/RO2007/000007

(22) International Filing Date: 19 June 2007 (19.06.2007)

(25) Filing Language: English

(26) Publication Language: English

(30) Priority Data:
a 2006 00460 19 June 2006 (19.06.2006) RO

(71) Applicants and
(72) Inventors: **ANTONOVICI, Corneliu** [RO/RO]; Str. Râul Mara nr.11, Bl. M5, sc.1-2, ap.5, sector 4,, R-041651 Bucuresti (RO). **GHEORGHIU, Steluta** [RO/RO]; B-dul Dacia nr.52, sector 3, R-010406 Bucuresti (RO).

(81) Designated States *(unless otherwise indicated, for every kind of national protection available)*: AE, AG, AL, AM, AT, AU, AZ, BA, BB, BG, BH, BR, BW, BY, BZ, CA, CH, CN, CO, CR, CU, CZ, DE, DK, DM, DO, DZ, EC, EE, EG, ES, FI, GB, GD, GE, GH, GM, GT, HN, HR, HU, ID, IL, IN, IS, JP, KE, KG, KM, KN, KP, KR, KZ, LA, LC, LK, LR, LS, LT, LU, LY, MA, MD, ME, MG, MK, MN, MW, MX, MY, MZ, NA, NG, NI, NO, NZ, OM, PG, PH, PL, PT, RO, RS, RU, SC, SD, SE, SG, SK, SL, SM, SV, SY, TJ, TM, TN, TR, TT, TZ, UA, UG, US, UZ, VC, VN, ZA, ZM, ZW.

(84) Designated States *(unless otherwise indicated, for every kind of regional protection available)*: ARIPO (BW, GH, GM, KE, LS, MW, MZ, NA, SD, SL, SZ, TZ, UG, ZM, ZW), Eurasian (AM, AZ, BY, KG, KZ, MD, RU, TJ, TM), European (AT, BE, BG, CH, CY, CZ, DE, DK, EE, ES, FI, FR, GB, GR, HU, IE, IS, IT, LT, LU, LV, MC, MT, NL, PL, PT, RO, SE, SI, SK, TR), OAPI (BF, BJ, CF, CG, CI, CM, GA, GN, GQ, GW, ML, MR, NE, SN, TD, TG).

**Published:**
— *without international search report and to be republished upon receipt of that report*

*For two-letter codes and other abbreviations, refer to the "Guidance Notes on Codes and Abbreviations" appearing at the beginning of each regular issue of the PCT Gazette.*

(54) **Title:** METHOD AND STRUCTURE FOR SOLAR ENERGY HARVESTING TYPE GLASS ROOF TILE

Section through modified solar cell

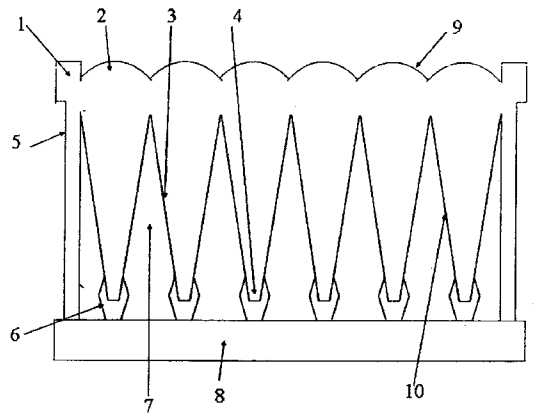


1 – glass roof-tile or half brick
2 – profile of external surface
3 – internal structure, optical and mechanical profiled
4 – semiconductor elements
5 – profiled side structure
6 – opto-electrical module
7 – inter-profile channels
8 – back pane
9 – external surface
10 – internal surface

(57) **Abstract:** The invention refers to a new structure that enables glass elements to harvest solar energy. These glass roof-tiles or bricks are considered optimal elements for solar energy harvesting and electricity production, able to endure harsh climate condition, with strong winds and heavy hail and snow fall, that are stiff and impact proof. Due to the improved profile with light directing effect it is possible to save the semiconductor, utilized for converting light into energy, under thermal criteria. As efficient semiconductor world production is limited, the optical module has the ability to connect different types of semiconductors following a certain way of interfacing. The electrical connections are made at the element's interface level, by shaped cabling on the module, and at assembly level, realizing the module as a compact glass element, with external side connectors used for wall connection or mobile pane grid connection. The system also contains an electronic structure that prevents self-destruction. The element is mounted in panes that can be used in complex greenhouse elements, able to collect solar and wind energy. As there are used typical elements, independent of the semiconductor provider, the initial, investment cost is less than 1 $/w. The common typical models are 10" and 8" squares generating 20 w maximum power, respectively 15 w power, when equipped with opto-electrical converters with 35% performance, and weighting 7 lb, respectively 5 lb, with 2" thickness.

WO 2007/149001 A2

TITLE OF THE INVENTION

Method and Structure for Solar Energy Harvesting Type Glass Roof Tile

CROSS-REFERENCE TO RELATED APPLICATIONS

Not Applicable

STATEMENT REGARDING FEDERALLY SPONSORED RESEARCH OR DEVELOPMENT

Not Applicable

REFERENCE TO SEQUENCE LISTING, A TABLE, OR A COMPUTER PROGRAM LISTING COMPACT DISC APPENDIX

Not Applicable

BACKGROUND OF THE INVENTION

[0001] The invention refers to a new method and structure for transforming a glass element of widely spread production in order to be used for solar energy harvesting in form of electricity and/or heat, with long lifetime and increased endurance to climatic aggressiveness, at a low production cost.

[0002] In the last years, the idea of using renewable energy has emerged as a consequence of climate change and exhaustion of fossil fuels. Among the renewable energy resources, we refer here to the use of solar energy, in general, and to solar panels in particular. The main issues that must be dealt with when using solar modules are:

- cost: this is the most important issue with solar panels and it is directly related with the surface of semiconductor used. Thus, if semiconductor surface is minimized, total cost of the solar panel is also minimized.
- conversion efficiency: the achieved efficiency at conversion from solar energy into electrical energy is highly affected by losses
- environmental impact: the production of solar panels leads to some amount of pollution. Also, placing a solar panel can have a negative impact on the surroundings. As the conversion efficiency is rather low, large surfaces covered with solar panels should be used in order to produce a significant amount of energy.

- lifetime: harsh weather conditions like heavy rain, strong wind, hail, snow, etc will highly affect the functional capabilities and life duration of a solar cell.

[0003] Many methods and structures of solar modules are known, which are made of different semiconductors, in different shapes, but these have the following disadvantages: low endurance in an increasingly aggressive environment, as it is foreseen for Earth's climate to evolve, low efficiency and high costs due to the large silicon surface that is used. The systems that use optical concentrators are, in most of the cases, thin and dependent on the type of the semiconductor. Other systems like self-positioning dye are being developed at this time and they also seem to be sensitive to weather.

## BRIEF SUMMARY OF THE INVENTION

[0004] This invention improves the profile and the structure of a glass element widely produced, which thus has the ability to collect solar energy as electricity or/and heat. The new product is better than the other proposed pane structures, because it endures future harsh climate condition; it has over 30 years lifetime and a low total cost. More specifically, the main advantages of the invention are the following:

- an optical profile which makes the tile highly resilient to harsh weather conditions
- modularity
- a multi-element adapter module, grouped into a polycrystalline, flat or spherical electro-optical module
- single-position mounting, with electrical and thermic connection to elastic and viscous-plastic materials (vaseline, silicone, soft-elastic metals)
- removable optical adapter module, that mitigates thermical dilation and mechanical stress with thermic and optical connection
- flexible electrical connection and optical connection that adjusts the refraction index, and provides multiple reflection on the active element, and side reflection captured by the active element
- adhesive profile for sidewalk
- multiple system of optical directing with concentrating profile which allows the use of the tile in roofs, walls, pavements
- integrated protection against failure and dynamic obstruction (snow, mud, leaves, clouds, planes) and destruction (bombs, bullets)
- easy mounting in panes and roofs
- heating and cooling system which also allows heat collection for greenhouses and homes

- it can be mounted on existing structures (highways, railways, greenhouses, homes) in order to minimize the environment impact
- protection and conversion systems integrated at module level, adjustable for the current illumination and electric load
- electrical searing system, in order to cope with harsh weather
- anti-reflexive coating which can also provide abrasion protection
- intern profile can be metal coated, thus having an ornamental role
- intern, air-tight space is filled with inert gas, thermical adapted and mechanical stabilized
- it can contain accumulators and light sources which would maintain a remanent light as inferior stabilization
- it can be mounted in olo-morphic roofs, with the ability to track the sun and protection against bad weather
- it can be built with standard shape and size, but it can also be customized to the application
- it doesn't depend on semiconductor's shape and characteristics, and it can accept and protect highly efficient materials

BRIEF DESCRIPTION OF THE DRAWINGS

[0005] To better understand the features and advantages of the invention, we include the following drawings, which are referred to in the detailed description of the invention:

Figure 1 represents a section through a modified solar cell;
Figure 2 shows a section through the solar mobile cell;
Figure 3 depicts a section of a fixed solar cell;
Figure 4 is an electro-optic adapter for flat rectangular systems (1-2D structure);
Figure 5 is an electro-optic adapter for spherical systems (1D structure);
Figure 6 shows opto-electric gear devices with improved efficiency;
Figure 7 is opto-electric elements connection scheme inside the cell;
Figure 8 is the assembly for energy accumulation and delivery;
Figure 9 is the action system for the solar pane in the mobile roof;
Figure 10 is the integrate system for solar alimentation with greenhouse and aeolian station with or without network release;
Figure 11 is an example of fixed pane application for transport – highway case.

DETAILED DESCRIPTION OF THE INVENTION

[0006] The invention is based on the observation that in order to withstand an aggressive climate, with strong wind, hail and heavy snow, the modules collecting solar energy have to be protected with a glass layer of at least ½ inch thick and to weigh at least 7 lb/ft2 in an aerodynamic structure, that must not allow the creation of dangerous vortexes. The structure has to be easily produced and assembled, for the ease of transporting and installing. There is such a glass structure in construction industry, which is called tile or brick that is easy to use. The invention brings a new profile, easy to produce, matching the optical laws, and an adaptive structure of semiconductor elements, thus creating a new product – the solar cell roof-tile. This can be used as a solar panel element in various cases.

[0007] The profile according to this invention improves the mechanical performance of the ordinary glass-tile, which was conceived to meet ornamental requirements, driving the light towards dedicated places, where elements for converting light into electricity might be installed. As the cost of materials in a photovoltaic array is given by the used semiconductor (the expensive material) and glass (the cheap material) quantities, the invention extends the use of glass, through the specialized profiles for directing the light rays, with good influences on the structure's resistance, and reduces the use of opto-electric conversion materials to the minimum necessary, typically by 10-100 times, thus reducing the cost. The semiconductor world production is limited, therefore the structure according to this invention eliminates the dependency on a semiconductor source by creating the adapter modules of opto-electric elements, which are specialized for the semiconductor type and standardized, leaving the glass elements production unchanged for some standardized models. The structure according to the invention eliminates the disadvantages of the solutions already proposed, because on the opto-electric adapter module there can be installed correctly all the series of known semiconductors; it also minimizes the loss due to light reflection on the semiconductor, which has a high refraction index, by gradually adapting the refraction index and/or by using local reflection. Moreover, the module has electrical protection, is interchangeable without modifying the base structure.

[0008] Following, there are some examples of high mechanical resistance optical profiles for the glass element, and some examples of structures of optical module, that may use flat semiconductor elements and spherical semiconductor elements by incorporating them into the optical adapter module. Using

renewable energy has a negative impact also on the environment that can't be reduced under a lower limit. Therefore, we will give an example of an application that uses both solar and wind energy, reducing the impact to that of greenhouse effect, but maximizing the positive effects. Due to the low density of specific energy of solar radiation, the needed surfaces are bigger, and the present solutions use two methods: production unit concentrating and fragmentation in small units, which may be or not connected to a network. The invention overcomes these disadvantages by using mobile panels in fixed structures, vertical walls, southern walls, or roofs and proposing using them for paving or covering parking, railways, and railroads too, in which case the beneficial effect is doubled by securing traffic too. It is presented another example of a glass element for pavements, sidewalks, and access ways with light sources included or not, which combines the mechanical resistance with thermal isolation and collection and use of light and electricity.

[0009] Figure 1 represents a general cell (1) in its upper side, typically with 40 mm width and with square sides of 240 or 190 mm long. Wave structure (2) has a controlled profile, and it is followed by a profiled structure (3) which has to direct the reflected and refracted light inside the glass, towards the semiconductor elements (4) at the profile's base. The glass cell is characterized by the side profiled structure (5) which allows easy mounting in construction grids that provides the necessary mechanical resistance.

[0010] At the cell base, there is the opto-electric module (6), which is built especially for the properties of the used semiconductor. The resulted channels (7) can be used for passing an air or cooling liquid flow, which takes on the obtained heat and transfers it to an accumulating element – e.g., a hot water tank. They can also be used for storing Li-Ion batteries and specific illuminating elements. Side walls (5) will be modified in order to allow the passing of electrical cables and tubes, so that to assure the necessary connection modularity and compactness.

[0011] The structure of the extern (9) and intern (10) surfaces can be covered with different materials in order to improve the optical properties, like antireflective layers, and hardened on the exterior surface in order to improve its endurance to abrasion and the performance of the optical transmission, as metal coating and electro-phoretic plating of the internal surface.

[0012] It's important to notice that the intern and the extern profiles will be optimized in order to maximize light transmission from the surface to the opto-electric module, depending on the relative

position to the sun. The structure from the figure can be uni- or bi-dimensional, depending on the type of the utilized electro-optic system. It has the advantage that it realizes a good compromise between the needed glass surface, which is impossible to avoid, and the semiconductor surface, which is an expensive material and it has to be minimized.

[0013] The mobile structure from figure 2 is especially aligned on the sun direction, so that the light radiation falls on the semiconductor layer. In this case, the cell has a simple structure, and it is made of glass frame (11) with strengthened and mechanical connection function, having a harsh side surface. The curved element of profiled glass (12) allows light pervasion without reflection and directs it to the photosensitive element. The profile will be optimized depending on functional and design criteria.

[0014] The profile is continued at its inner part with a prismatic structure (13), pyramidal or conic respectively, with a double role of mechanical resistance and light ray (19, 20) direction, being a continuous medium which prevents air interface refraction and the jump of the refraction index from the air value (1) to the semiconductor value (2-5), which would result in high reflection, but it is avoided, conforming to the glass structure described by the invention. The free space (13) has the role to save the glass amount, thus reducing the mass but maintaining the high mechanical resistance. The light pervaded through the surface is naturally directed based on the reflection and refraction effects [1], towards the interface at the rear of the profile (14), which is specially made in order to allow mounting on every type of optical adjustment devices. This is an important characteristic of the invention, which makes possible easy utilization, without fabrication changes of any type of semiconductor, thus reducing the dependency on a certain producer.

[0015] The square structure of the cell continues in the exterior on the side surface with the space for mounting (15) in walls or structures, having made on every side orifices for the electrical connections and for the cooling circuits.

[0016] The back surface may be made of the same glass material or of ceramic, on the condition to have the dilating coefficient equal to that of the glass. It can be transparent or opaque, polished or harsh, depending on its utilization and on consumer's preference. Inside the cell, a freeze-resistant gas or a cooling agent may circulate, in order to cool and thermo-stabilized the semiconductor elements, which can be used to generate a moderate energy, used for heating. The inner surface may be metal coated or dyed so that to reflect diffuse light and to prevent back pane heating, which assures

semiconductor elements cooling, when the cooling circuit is missing.

[0017] The structure is appropriate for mounting in walls and panes, having the front curb surface (11) parallel to the profile and to the opto-electric module-mounting surface. Covering the profile internal surface (18) has an ornamental role, but also a functional one, so that an Al, Au, Ag, Cr, Zn metal layer gives it not only a nice aspect, with interesting reflections, but also the possibility of protection covering through anode electrophoresis of the profile which was mounted so that to be humidity-insensitive and to have a long lifetime. Coating of thin transparent layers with profiles of non-uniform coating will make the cell look attractive and it will also serve energetic goals. In this case, as the sunlight goes straight to the semiconductor element, it does not act as an optic concentrator, the diffuse light being ten times lesser than the direct light. Depending on the type, the profile can be uni- or bi-dimensional, when it serves discrete structures.

[0018] The fixed solar cell from figure 3 is mounted in fixed surfaces, as walls, roofs, and pavements, with different orientations. According to the invention, this type of cell will have an asymmetric internal profile (40), different from the extern profile (32), so that to maximize the probability that the light rays (41, 42) to arrive inside the opto-electric element (33). For crepuscular light intake, an additional set of semiconductors (34) has been added.

[0019] The number of opto-mechanical profiles (33) and opto-electrical modules (38) has been multiplied, so that it has doubled or tripled, resulting in an increase in the semiconductor and the mounting cost. The internal surfaces of the optical profile (40) are covered with a reflecting material in order to direct light (41) towards the opto-electric module (38).

[0020] For vertical walls and sloping roofs, these profiles can be made asymmetric, such that their slope corresponds with light rays direction, when vertically or pre-established sloped mounted. For example, for a vertical wall at 45 degrees parallel at the equinox, the slope of the central axis will be 45 degrees so that the sections of the two triangular profiles to correspond in summer and in winter, resulting in four moments per year when the aligning of the opto-electric element is perfect. Optical corrections can be made by modifying the profile (32) such that the slope remains moderate.

[0021] The fixed profiles are uni-dimensional mostly, having the prism orientation from east to west and being installed on southern walls. A wide range of surfaces can be covered, for example roofs and

pavements.

[0022] In the case of the pavement, the upper profile (32) will be modified by introducing a grid at the curb level (31), with harsh or pyramidal surface to prevent sliding. The surfaces that are not directly affected by the abrasive contact (step walking or tire passing) will be treated at the surface in order to make them immune to dust and dirtiness.

[0023] The opto-electric adapter from figure 4 is a separate device that allows separating the massive glass production from semiconductor elements production. This device solves the problem of plain semiconductors that are cut in rectangular or square shapes, which can be mounted in series or parallel circuits.

[0024] The 1D adapter is a device (52) compatible with an optical element (50), in a prism shape, having only a section in a trapezoidal shape. The preferred semiconductor elements are the plain surface laminas, with 240 mm length (or equal to the interior size of the cell), with a few mm thick and with variable height from 1 to a few light absorption lengths – typically from 0.1 mm to a few mm, with the necessary conductors covers.

[0025] The 2D adapter is a device with both sections like that from the figure, where the semiconductor piece has the width and the length comparable and the optical element is in a cone or pyramid shape. This structure has the role of adapting the optical output of the element (50) to a plain opto-electronic piece (56), to achieve the necessary mechanical and electrical rigidity, and in the same time to minimize the losses in the interface with the semiconductor (59).

[0026] The opto-electric adapter is based on a ceramic or glass piece in a stick shape for the1D structure or in a cylinder shape for the 2D structure. This way, the optical structure (50) is utilized for directing the light (63, 64) towards the semiconductor (56) that will transform it in electrical flow. It can go directly to the interface (59) as the fascicle (54) or may be totally reflected on the wall (51) or on a optical metallic surface or on dye. At the interface between the glass cell (50) and the semiconductor (56), on the semiconductor, there will be put a layer for optical adaptation of the refraction indices and a liquid (Iceland liquid) or transparent plastic layer for uniform optical transmission, which improves the optical contact and eliminates the reflections.

[0027] On the side surfaces the piece (52) will have an adhesive element (53, 60) that can be resin or melted plastic, with mechanical adhesion and thermal conduction role. Next to the semiconductor element, the negative (54) and positive (58) electrical semiconductors will be placed which are connected by ultrasonic welding or conductor epoxy to the n-p surfaces of the semiconductor (56). The semiconductor can be a single element, for example polycrystalline Si, Ge, GaAs or a multiple element made of high efficient coatings. In each case, the refraction index will be adjusted, by using an intermediary optic element (59), eventually. Behind the semiconductor element, a well thermal conductor substance (57) will be added, for example silicone Vaseline, which assures a good extern thermal contact. The exterior surface (55) will be coated or dyed. At both ends it will provide electrical connectors (61, 62) that will be used for circuit external connection.

[0028] For this structure the conversion efficiency varies between 10% and 40%, as there many types of semiconductors on the market. Obviously, the major interest is in obtaining global efficiency of 30% and in using semiconductors with high performance. For commercial reasons, low performance semiconductors can be used, taking off the old adapters and putting some new ones afterwards can easily change that.

[0029] The system from figure 5 adapts the optical element to the structures that use a spherical semiconductor, produced by drops injection mechanism by free falling or by floatation. These have the advantage of being cheap and easily produced in large amounts, but they are low efficient, 10%-15% and they have sensitive problem for junction electric contact. We are interested in the elements ultrasound welded, not in the flexible mechanical contact, which may have problems in time.

[0030] The ray lights (83) propagate through the optical element (70), and then reflect on the optical element wall (71), whose surface is metallic covered or dyed, or they totally reflect. The fascicles (84, 85) traverse the interface (79) with the optical module (72).

[0031] If the semiconductor spherules are punctually radiated the efficiency lowers, as result of zonal saturation. To avoid this, it is better to uniformly radiate the whole available surface, but this operation needs a specialized reflector. This is allowed by the adaptation module that can be build specialized, and can include different production of spherical photocells, with or without reflector. Moreover, it can adjust gradually the refraction coefficients in order to avoid reflection losses, this being partly done by the reflector too. Connectors (81) and (82) connect the modules inside the cell, so that the whole

assembly is rigid and protected against humidity and other medium agents.

[0032] The structure of the optical module from figure 6 represents a practical solution to increase the absorption efficiency, by taking in the radiation reflected on the surface of another transducer/converter positioned at an angle from the first one, such that the radiation multiple exchange between them takes place, being equivalent to an antireflective layer.

[0033] The surface of used active material increases by 50-100%, while the efficiency increases only by 30%, but it is a solution to the cases when it is difficult to apply antireflective layers due to multiple layers of efficiency. Moreover, the system prevents the breaking or the weariness of the material sensitive in time, as effect of random diurnal thermical cycles, due to light intensity variation.

[0034] The conductor elements and the mechanical grips are realized on flexible elements with dilating roles. When the active element is put on the prism surface, the flexibility coefficients and the tenacity are compatible such that there won't appear any breaks or weariness rifts at cycling. The electrical contacts have corresponding section and are twisted multi-wired such that there is room for dilation, without longitudinal translation.

[0035] The prism can be covered with an antireflective layer which adapts the surface to the coupling polymer-liquid, under the total reflection condition, when its index is low or the transmission condition, when its index is high and compatible to the cell. When the prism interior is empty, the antireflective layer may be put on an associated transparent support, this structure being self-sustaining, but on flexible elements.

[0036] In figure 6, there are presented the opto-electric coupling devices with improved efficiency, which adapt the intern cell profile optically and mechanically, and which are produced in a typical range, with opto-electric conversion profile, made such that they assure the independency from the opto-sensitive elements source (semiconductor producers) and to preserve the main investment for the glass cell panes, that can be easily upgraded and maintained. The opto-electric adapter module provides for a precise mechanical fastening, without generating mechanical and thermical tensions on the semiconductor, which in time may lead to its breaking or electrical deterioration and to lower efficiency.

[0037] At the same time it must assure a high optical transport coefficient, which is mainly achieved by eliminating parasite reflections between protection technological surfaces, by antireflective coated layers, and/or immersion into highly transparent and compatible refraction index (Iceland liquid, silicone) liquids or plastics that determine a low reflection in the conditions of a low supplementary optical absorption.

[0038] In case that the surface of the semiconductor is not treated antireflective, as this is sometimes difficult to achieve, using a sloped profile maximizes the light absorption inside the semiconductor, by repeated multiple reflection on active elements (such that if an extern light ray with 100% intensity enters the cell, 1% will be reflected on the external optical surface of the cell and 99% will be refracted). On its way inside the cell the light is absorbed or scattered and another 3% are lost, such that only 96% arrive at the exit surface of the interior profile towards the opto-electric conversion module. Here, another 1% is internally reflected and 2% are reflected on the surface (112), thereafter the remaining 94% hits the converter (semiconductor) plate in point (100), where 65% are absorbed and the rest of 29% are reflected. From those 65%, only 40% becomes electricity (the actual conversion efficiency varies between 8% and 40%), so approximately 4-25% from the initial energy is electricity, the rest becomes heat and warms up the semiconductor. The effect of the heating is mechanical dilation, which if doesn't have room to expand, determines mechanical stress and semiconductor's deterioration and change of its electrical properties, characterized by lower conversion efficiency, following the increasing internal loss and the structural modification of the junctions (equivalent to transistor cooking).

[0039] The remaining 29% that usually is lost inside the optical system and is changed to heating in the present assembly, hits the second slate, "V"-positioned and follows the same conversion process. The part that reflects again is only 35%*29% = 10.15% which reflects again on the initial slate, from which only 35%*10.15% = 3.55% is lost, and so on, until it disappears inside the optical system. Finally, from the 100%, initially 92% are converted electrically with the conversion specific efficiency (if this is 0.4, the electrical energy produced is of 36.8%), generated as a product between the tension and the current of the converter.

[0040] The adapting module that converts to the optical cell profile, has the role to adapt the dilation coefficients of the different used materials (with $15*10^{-6}$, for glass $2\text{-}4*10^{-6}$, for semiconductor $1\text{-}5*10^{-6}$, for polymers (viscous-plastic) or liquids ("Island liquid") $10\text{-}50*10^{-6}$), such that the dilation caused

by the climatic variation or optical heating not to have mechanical effects, with functional consequences.

[0041] The opto-electric converter includes all the electrical and optical structure, being modular, and it allows production in quality and technology conditions superior to those in which the optical tile is produced, assuring an optimal distribution of the building effort and minimal cost.

[0042] A variant of opposing mounting is that of using a reflector immersed or not in an optic medium. The module is supposed to have thermal conduction properties, because more than 60% of the initial optic power (of 1 Kw/m2, approximately) is released inside the module structure, assuring semiconductor's cooling and defrosting in wintertime, by using some electric resistances mounted on the cell profile or a thermic agent (water, antifrozing liquid, air, etc).

[0043] Figure 7 depicts the opto-electric elements connection scheme inside the cell. Inside the glass semi-cell, the opto-electric modules are represented by the symbols (125, 127), which show an opto-electric generator diode. They can be connected in different ways, as a grid, every way having its advantages and disadvantages.

[0044] The figure is general and it shows a series connection on rows, followed by a parallel connection of the rows, having the possibility of parallel connection at diode-level. This system has the disadvantage of displacement from the optimal functioning resistance that allows the photocell to deliver the maximum power, as effect of non-uniform lightening. The solution to this problem is realizing the optimizer in commutation at the photoelectric cell level, but this isn't economical. The practical proposal is connecting in series the photocells (134), (135), (136) – representing all the intermediary cells, (137) such that the tension grows to values that are compatible with mass electronics, protected by a diode (138) which limits the current and prevents system side destruction creating the series assembly (131), with current outputs (131, 132), which are connected in parallel with the other existing series (125-128, 127-129, 130). At one end of the circuit (124-126) it is mounted a commuting circuit for optimization and adaptation of the operating characteristics (123) in order to maximize the delivered power. This has the outputs (121-122) which traverse in the exterior the cell (120) on the lateral side such that to be easy to connect to the rigidity and mounting grid.

[0045] Figure 8 presents a compact assembly for energy accumulation and deliverance at night time,

creating light passive systems, like bus station roofs, etc. The compact cell is made up of two cells - an upper one, towards the sun, which collects the energy during day time (140) and an internal one (152) enabled with accumulators and efficient LEDs, separated by ceramic or glass pane (151). They can be directly connected in the same fabrication element or such that the produced light lifetime to be equal to the necessary one and to have an intensity comparable to the incident one, in case of a total system efficiency of 10%. The receiver module (140) is made up of the profiled extern and antireflective treated surface (141), which directs the light (144, 145) towards the receive module (142, 143). It is possible to use the free spaces to deposit the accumulation LiIon batteries or to cool with airflow. The semi-cell presents the grid-mounting place (150) that has the output orifices for electric cables and cooling tubes (148, 149).

[0046] The inferior pane (152) contains the illuminating system and can be put back-to-back forming a single compact cell or can be independent and connected at the collecting module through the connectors (158). Inside, behind the special profile (156 – 157) with ornamental role, there are the accumulator batteries, LiIon preferably (155) and the illuminating elements (153, 154) controlled by an electronic module.

[0047] Figure 9 shows the action system for the solar pane in the mobile roof. More solar cells (163) can be connected by the aid of a profiled structure (161, 162, and 166) in a pane (160) which can be directly applied at the wall building or can be utilized as a mobile pane in the aerodynamic roof structure. In order to be reliable, this must weigh enough and is estimated at 40 Kg/m2 approximately. Pane frame (165) must have the necessary rigidity in order not to allow the bending under its own weight and additional weights and must have the necessary places (164, 167) to be mounted in the exterior. On its side, the frame is coupled to other objects by the sides (161), on which can be hung up mobile panes with the use of a hinge (161). The pane also has electric (168) and thermal (169) connectors and hanging and action elements (164, 167).

[0048] The advantage of this pane is its robustness, as it endures bad weather and extreme climate with strong winds and rock rain, by protecting the internal circuits from humidity and vibrations at a low cost of 1 Eur/w approximately. Frame (161) allows vertical mounting of a wire stick mesh system for protection against the birds and deflection of the wind currents above the pane by creating a micro-turbulence layer.

[0049] The structure of a complex installation for solar energy accumulation is based on maximum using the field by building solar collectors together with a greenhouse and wind harvesters. This helps maximizing the obtained energy. It is not an optimal ratio between the space and panes utilization. For all-day delivery of a energy closed to the maximum value it is necessary to define the shadowing angle, and if we admit that this is 20 degree above the horizon, the space utilization degree is only 20%.

[0050] This way, a greenhouse roof is equipped with solar connectors only on 25% of the surface, but it has the advantage that the cells don't shadow each other, from the moment they are illuminated, they generate at full capacity until the sunset. Because the sunrays have different ways through the atmosphere, the power varies by 20% at noon, when it is at its maximum, at sunrise and sunset, when the sun is up and the cells are not shadowed.

[0051] In order to minimize the negative ecological impact, it is proposed that the solar structures be applied in greenhouse complex, completed by Aeolian structures. Such an example is given in figure 10, where the roof integrates a greenhouse with Aeolian structures. It is a mobile (morphed) roof with improved aerodynamic coefficient, able to withstand winds of up to 200 Km/h without damage.

[0052] The transparent morphed roof (170) is made up of panes with a slope corresponding to the latitude, with simple transparent panes (171) that have the role to link aerodynamically the mobile solar panes. The transparent panes are made of polyurethane foil or Plexiglas, being doubled in order to provide for the necessary resistance. They are mounted on profiled frames, with hinges at the extremities (179, 183) and at the centre, having enough width to cover the largest size. They can consist of anti-wind nets, birds' anti-landing vertical wires, with role in wind turbulence generating. Their length is equal to that of the solar pane, and the width is greater than the distance of the most unfavorable position at zenith, where the distance between the consecutive edges of the panes is equal to the square root from the difference between the square of the pane separating distance and the square of the pane width.

[0053] This way at noon the panes are positioned parallel to the horizontal, the light rays (172, 174) penetrate perpendicularly, while at the zenith (sunset or sunrise) the panes have a 70 degree angle with the horizontal, after which the pane power goes down very rapidly, due to the combined effect of sun moving, which determines inter-shadowing, and its power lowering as a result of atmospheric absorption. At zenith the rays of light (185) fall perpendicularly on the panes. The cylindrical panes

don't need to be aligned at tilting in order to compensate the sun axis tilting for each season, while the panes with spherical cap profile (2D) must be mounted on adjustable supports, which make the construction more complex, as it needs a double frame that can be in charge of the N-S alignment.

[0054] The system for alignment moving is made up of the roof frame (184, 188), which is rigidly mounted in the building structure, the solar pane (173) support (175, 181), with axial rotation bearing and hinges (179) at the lateral sides of the pane. The operation is done by an adjustable lever system from a central operation unit on the centre or the side of the building. The movement is transmitted through the horizontal rods (184, 188) to the wheels and the crosses for action direction changing at 90 degrees (176, 182, 187, and 189) which transmit the movement equally to the panes through the side arms (177, 183, 187, and 189) socket on the connection cross. In order that the system won't release forces into the structure through the central axle, it is important to have two arms at each operation, the structure being meant to support wind aerodynamic force and the weight of the elements of almost 50 Kg/m2 for the solar pane and 20 Kg/m2 for the completion pane plus the weight of approximately 1 m height of snow. The pane heating system melts it down quickly and eliminates it in liquid form. The system must withstand catastrophic situations with strong winds and heavy snow or rain with big hail that will happen often in the future. The panes are provided with elements for deflecting wind flows from the surface by creating micro-turbulence in net systems or vertical flexible wire antennas which prevents bird landing.

[0055] It is possible to optimize the used surface and the photo solar element density in order to find the optimum economic shadowing angle or pane density characterized by the ratio of the pane surface and the total immobilized surface.

[0056] The fixed pane system can be applied on structures and zones already build, bringing a positive impact without increasing the negative impact upon the environment. In order to function, the cells are made specialized for the sun tilt angle from the road and will be protected against strong wind and birds. Because the sun moves from east to west, maintaining the slope, in order to have an optimal assembly without adjustment, it is enough to use a uni-dimensional structure with an angular position such that at the equinox the sun concentrates equally in the side elements of the symmetric intern structure, thus it will generate maximum power four times per year. The generator of the structure will be positioned on the East – west axis.

[0057] In figure 11 it is given an example of application for highway space utilization for making the fixed roof with solar cells and elements to capture the Aeolian energy. The structure uses a fixed solar pane (215, 207) and a side northern pane (211) that are supported by central (194) and side (201) pillars and by a horizontal beam. At the pane extremities there are mounted deflectors (203, 205, 206, 216, and 217) with protection role against the strong wind and birds landing.

[0058] The pane orientation will be made depending on the tilt angle of the sun from the road, such that at noon and at equinox the rays (212) fall perpendicularly on their surface and generate maximum powers. The structure can be used above every transport ways, roads or railways. For the structure, different types of profiles and energy utilization applications can be chosen depending on the local necessities.

CLAIMS

1. The solution according to the invention is original, because it modifies the typical glass brick module profile, transforming it into a robust opto-electric conversion element.

2. Profile according to claim no. 1, such that it assures maximum light radiation collecting, in the opto-electric element interface, depending on sun position and on the module use (panel, wall, roof, and pavement).

3. Internal profile according to claim no. 1 and 2, which contains a different number of light collecting elements, in different interior positions, such that the collected radiation amount is maximum.

4. Independent opto-electric module, realized according to claim no. 1, which adjusts the semiconductor that may be realized from different materials and in various shapes, which are connected to the optical typical interface of the interior element of glass profile.

5. Opto-electric module according to claim no. 4, which adjusts the glass refraction index to that of the semiconductor, by inserting a compatible glass laminar liquid or solid antireflection treated, and refraction – reflection assembly immersed into resin or into a solution with appropriate refraction index and robust electrical contacts.

6. Opto-electric adaptor module according to claim no. 4, which assures easy mounting and removal by using a module's heating and withdrawal device, in order to be replaced with higher efficiency elements in situ and operation.

7. Opto-electric module according to claim no. 4, which assures the independence between the typical glass cell production and the type of available semiconductor, spherules, boards and chips.

8. Opto-electric module according to claim no 4, characterized by an electric circuit, integrated in every opto-electric module, which has protection elements and digital electric load optimizer, generating an optimal combination intensity – tension that allows extracting the maximum power and protecting against punctual shadows.

9. Opto-electric module according to claim no. 4, characterized by a commuting system associated at the cell level, which maintains the optimum functioning resistance, for the electro-optic system to deliver the maximum power, adapted at the current requirements of the user or the buffer battery.

10. Profile according to claim no. 1, characterized by an exterior surface hardened and antireflective treated, with adhering contact zones (leveled bumps or lamellar profile) with harsh surface, realizing the optimum between the mechanical and the optical function.

11. Profile according to claim no. 1, characterized by an exterior and interior profile correlated to the angular coordinates of the wall, which is situated such that the delivered power to be maximum, for the real using conditions.

12. Profile according to claim no. 1, characterized by the fact that inside it may be metal coated or covered by different methods, for design, optical optimization, conduction or electrical and chemo-mechanical protection goals.

13. Profile according to claim no. 1, characterized by the fact that it can be used as a mobile roof, tracking sun position, and having a structure of prisms or pyramids, which are axial moved or moved away from the extern optimally-curved profile, in order to maximize the mechanical resistance and the provided power, starting from spherical calotte for the bi-dimensional case or cylindrical generator for

the uni-dimensional case.

14. Profile according to claim no. 1, characterized by the fact it can be inserted in streets' pavement or in roofs or walls, having a different range of functions, corresponding to the application type.

15. Profile according to claim no. 1, characterized by the fact it uses the internal space for circulating a thermal agent or electric cable for defrosting snow-ice melting, thermal stabilizing or residual heat collection in thermal accumulation systems.

16. Element for solar energy collection of robust solar cell type, with profile and electrical structure according to claims no. 1-14, which can be integrated in mobile or fixed panes, in brickworks, in pavements, and which can be used as a passive illumination element, having highly efficient light's energy accumulators and light generators integrated at pane or element level.

17. Element for solar energy collection of robust solar cell type, with profile and electrical structure according to claims no. 1-14, which can be integrated in mobile panes, having an acting and side-protecting structure against wind and birds.

18. Electrical panes according to claim no. 16, characterized by the fact they can be integrated in a morph roof, with reduced aerodynamic coefficient, which can be utilized for a greenhouse, with supplementary function of Aeolian energy collection.

19. Fixed electrical panes according to claim no. 15, which can be integrated in systems of climatic protection panes and parasolars for parking lots, roads, highways, railways, in order to minimize the ecological impact.

20. Optical adaptive device according to claim no. 4, characterized by the fact it adapts the thermal dilatation coefficient, by using a system of optical materials with dilatation coefficients closed to those of the opto-electric element.

21. Optical adaptive device/module according to claim no. 2, characterized by the fact it maximizes the light intensity absorbed in electro-optical converters, by their positioning in "v" form, including or not a triangular prism of optical material with high refraction index, on which surfaces the opto-electrical

transducers are coupled.

22. Opto-electrical module, characterized by the fact the electrical conductors follow the opto-electrical transducer/converter surface and are connected to it by flexible, elastic, welded joints.

23. Optical module according to claim no. 22, characterized by the fact it uses contacts and flexible supports for stress discharge, following thermal gradients occurrence.

24. Electronic module according to claims no. 20 – 23, characterized by the fact it uses a viscous-plastic medium, in order to improve the thermal conductivity and heat transmitting to the module surface, profiled as an optical radiator and/or reflector.

**Figure 1**

Section through modified solar cell

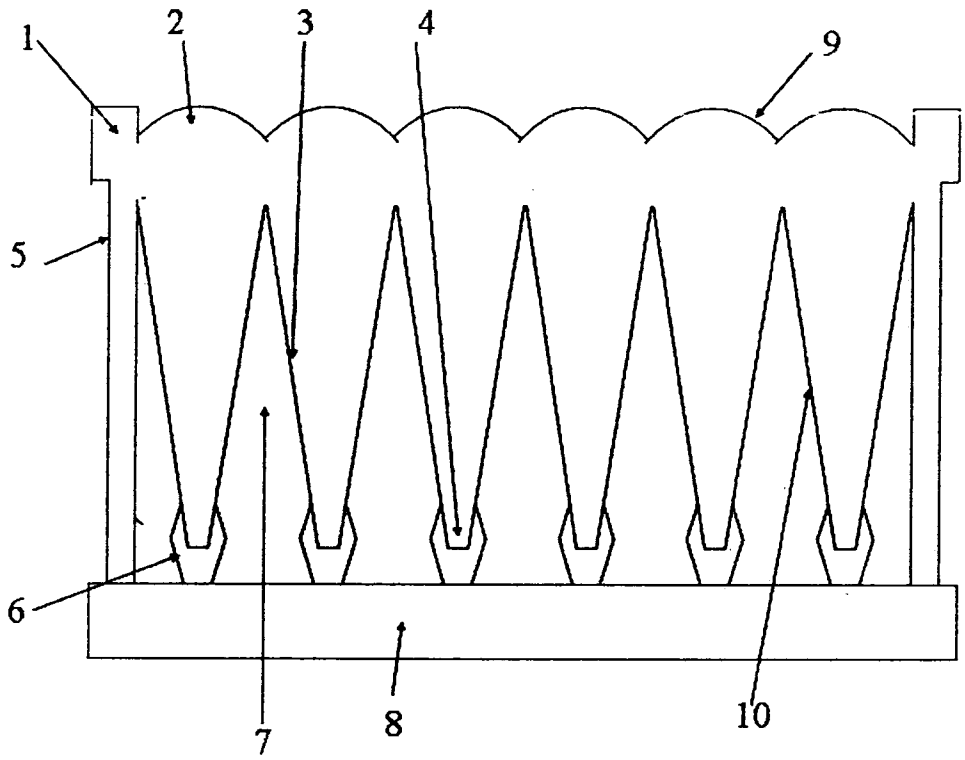


1 – glass roof-tile or half brick

2 – profile of external surface

3 – internal structure, optical and mechanical profiled

4 – semiconductor elements

5 – profiled side structure

6 – opto-electrical module

7 – inter-profile channels

8 – back pane

9 – external surface

10 – internal surface

**Figure 2**

Section through the solar mobile cell

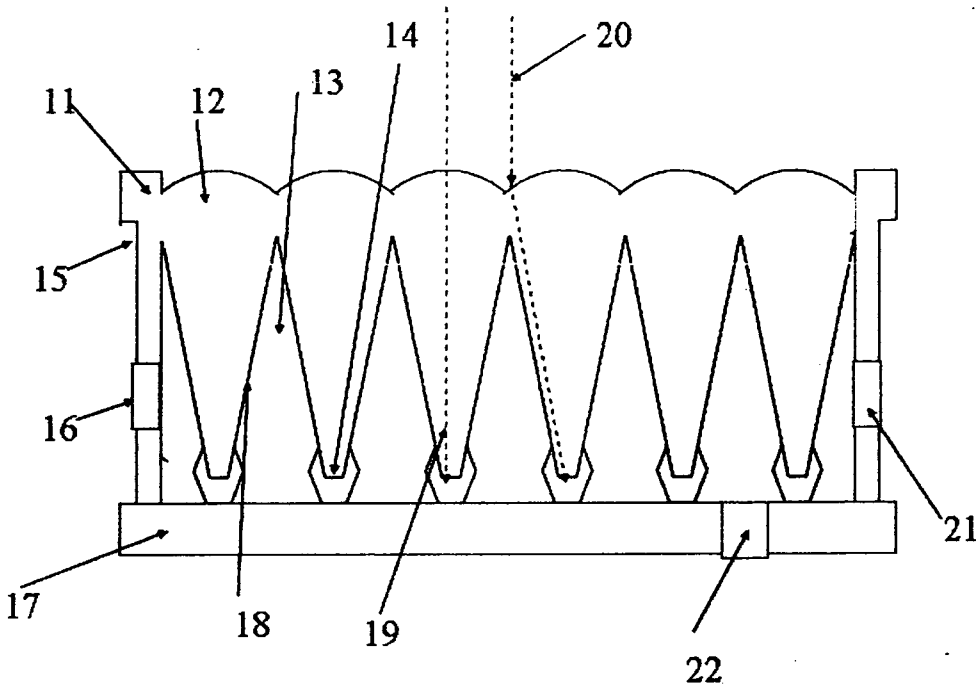


11 – glass frame

12 – curved element of profiled glass

13 – prismatic structure

14 – interface

15 – mounting space

16 – hole

17 – back pane

18 – intern surface

19, 20 – rays of light

21, 22 – holes for connectors pass

**Figure 3**

Section of fixed solar cell

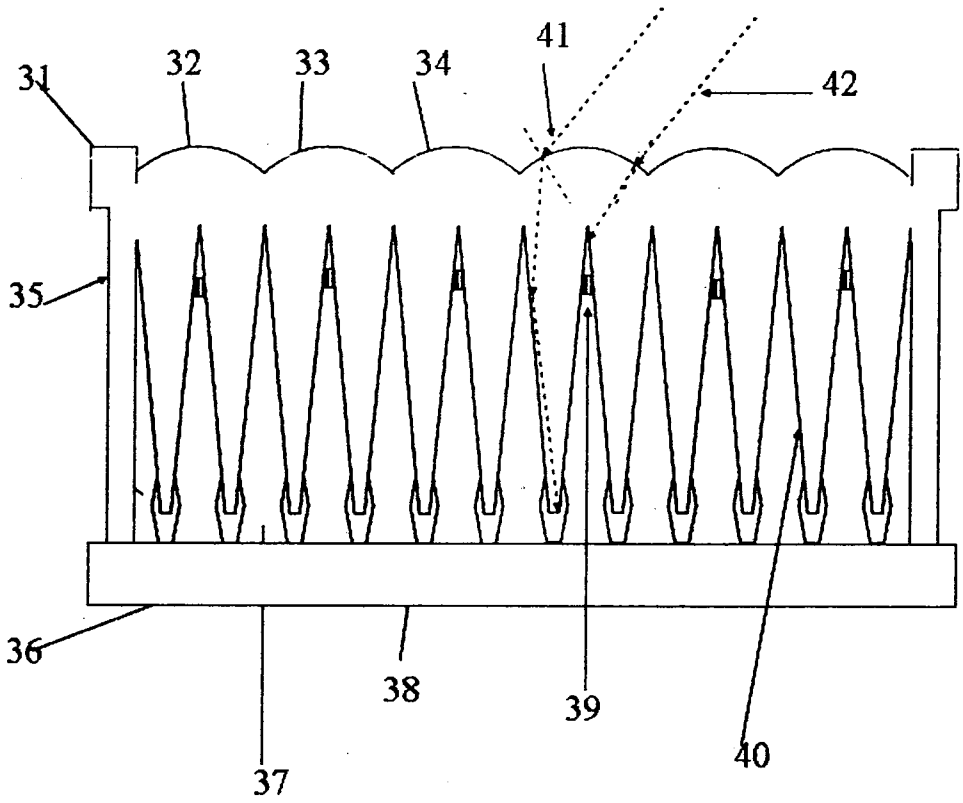


31 – curb level grid

32 – extern profile

33 – opto-electric element

34 – additional semiconductor set

35 – harsh side wall with mounting structure

36 – back pane

37 – inter-profile space for heating agent circulating

38 – opto-electric module

39 – interstice opto-electric module

40 – asymmetric internal profile

41, 42 – light rays

43 –abrasive hardened profile for pavement-type profiles

**Figure 4**

Electro-optic adapter for flat rectangular system, 1-2D structure

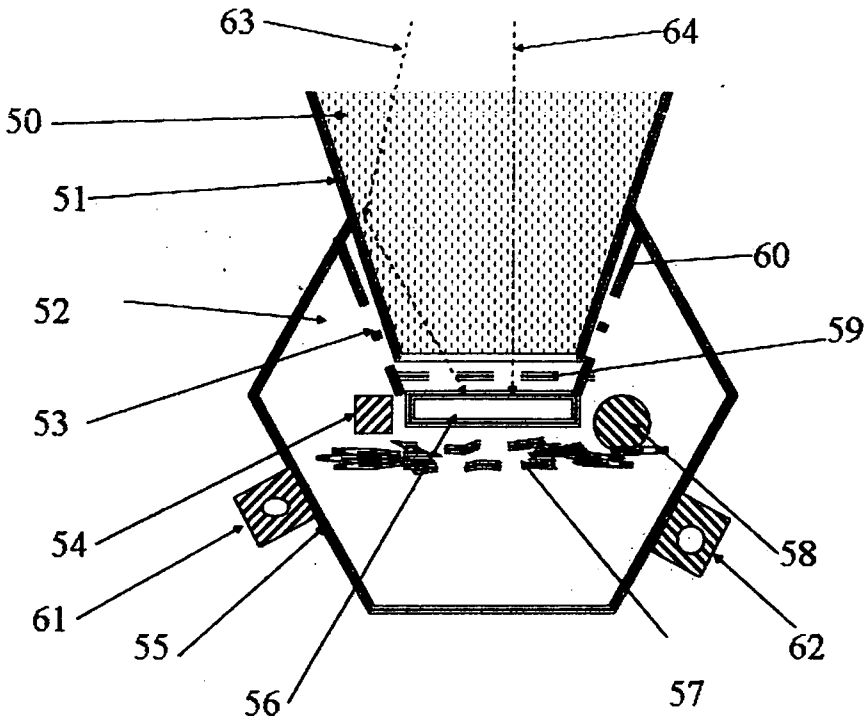


50 – optical element

51 – wall

52 – 1D adapter

53 – adhesive element

54 – negative electrical conductor

55 – extern surface

56 – plain opto-electric piece

57 – thermo-conductive substance

58 – positive electric conductor

59 – interface to the semiconductor/optical intermediary element

60 – adhesive element

61, 62 – electrical connectors

63, 64 – light rays

**Figure 5**

Electro-optic adapter for spherical systems – 1D structure

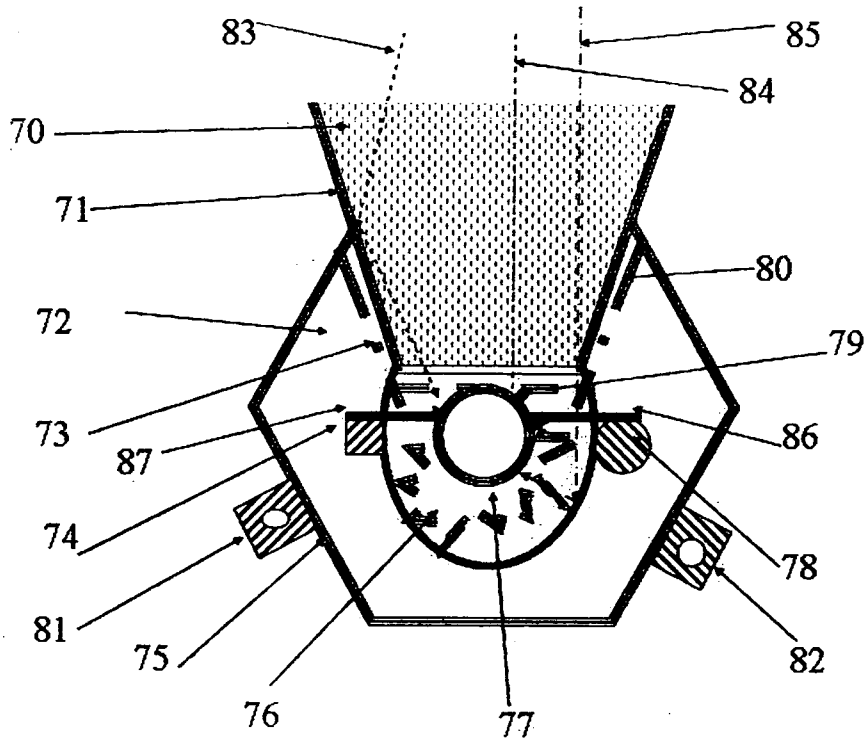


70 – optical element

71 – optical element's wall

72 – optical module

73 – optical interface – plastic or transparent resin

74 – positive cable connecting conductor from sphere junction

75 – module extern protection element, metal vacuum coated or electro-chemical plated.

76 – internal reflector immersed in solid solution for semiconductor's refraction index adaptation

77 – semiconductor spherule parallel connected through conductors ultrasonic welded.

78 – negative collecting conductor

79 – adapting interface to the opto-mechanical module

80 – opto-mechanical gear interface between opto-electric module and opto-mechanical module

81, 82 – connectors for module connection inside the cell

83, 84, 85 – light rays

86 – negative electric cable from the spherule to the connecting cable

87 – positive electric cable from the spherule to the connecting cable

**Figure 6**

Opto-electric gear devices with improved efficiency

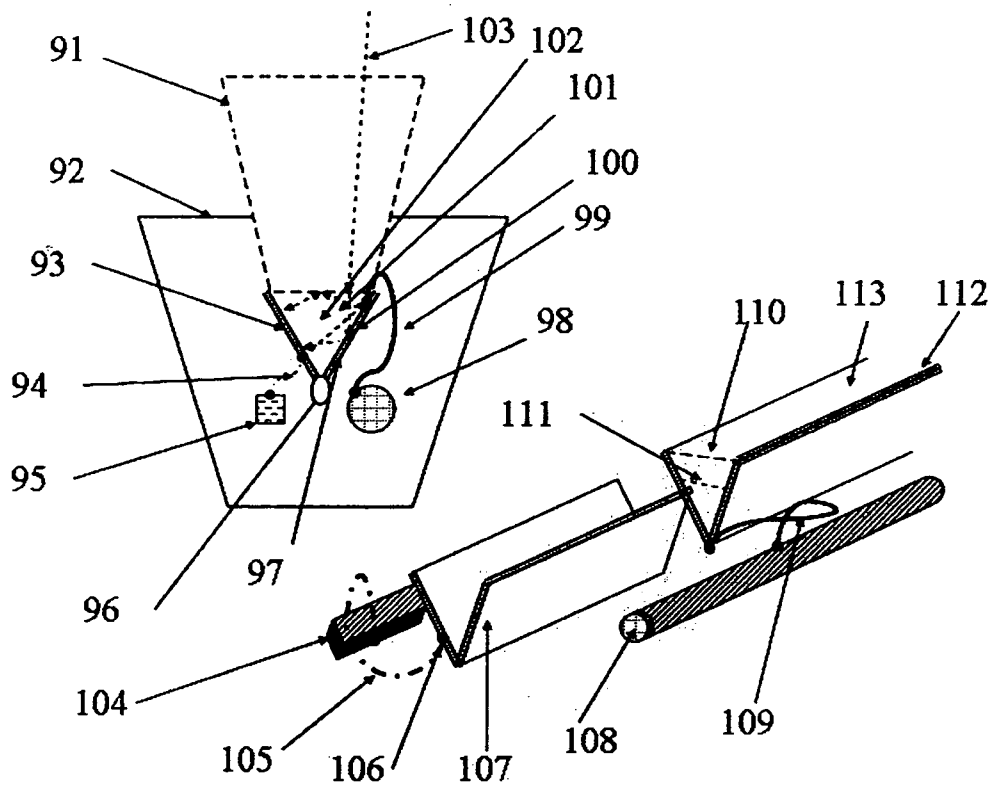


91 – Internal opto-mechanical profile of glass cell

92 – Upper surface of opto-electric adapter module

93 – Plain opto-electric conversion element, slope-mounted in a V-form

94 – Electric connector – flexible wire – from the negative contact of the semiconductor element to the module's conductor element

95 – Negative polarity module's main conductor, which can be continuous for parallel mounting or discontinuous for series mounting

96 – Flexible element for connecting opto-electric conversion slates, which is important for thermical stress release and for parallel electric connection

97 – Plain opto-electric conversion element, slope-mounted, which together with 93 forms a wedge

98 – Positive polarity module's main conductor, which can be continuous for parallel mounting or discontinuous for series mounting

99 – Electric connector – flexible wire – from the negative contact of the semiconductor element to the

module's conductor element

100 – Incidence point of ray of light on plain opto-electric converter's surface (semiconductor chip)

101 – Ray of light inside the optical module

102 – Internal medium from the prismatic space between the two opto-electric converter laminas

103 – Incident ray of light inside the optical medium of the glass cell

104 – Negative polarity module's main conductor, which can be continuous for parallel mounting or discontinuous for series mounting (same as 95 in the figure)

105 – Electric connector – flexible wire – from the negative contact of the semiconductor element to the module's conductor element (94 in the profile)

106 – Plain opto-electric conversion element, slope-mounted in a V-form (93 in the profile)

107 – Plain opto-electric conversion element (97 in the profile), slope-mounted, which together with 96 (93) forms a wedge.

108 – Positive polarity module's main conductor (98 in the profile), which can be continuous for parallel mounting or discontinuous for series mounting

109 - Electric connector – flexible wire – from the negative contact of the semiconductor element to the module's conductor element (99 in the profile)

110 – Side-ending surface of the prismatic profile with mechanical rigidity and electrical conduction properties

111 – Internal surface of glass lamina for coupling to the intern optic system of the cell

112 – Upper surface of the adapting lamina of the optical module with optical coupling and mechanical forces release properties.

113 – Interior medium of the prismatic space of the opto-electric conversion element

**Figure 7**

Opto-electric elements connection scheme inside the cell

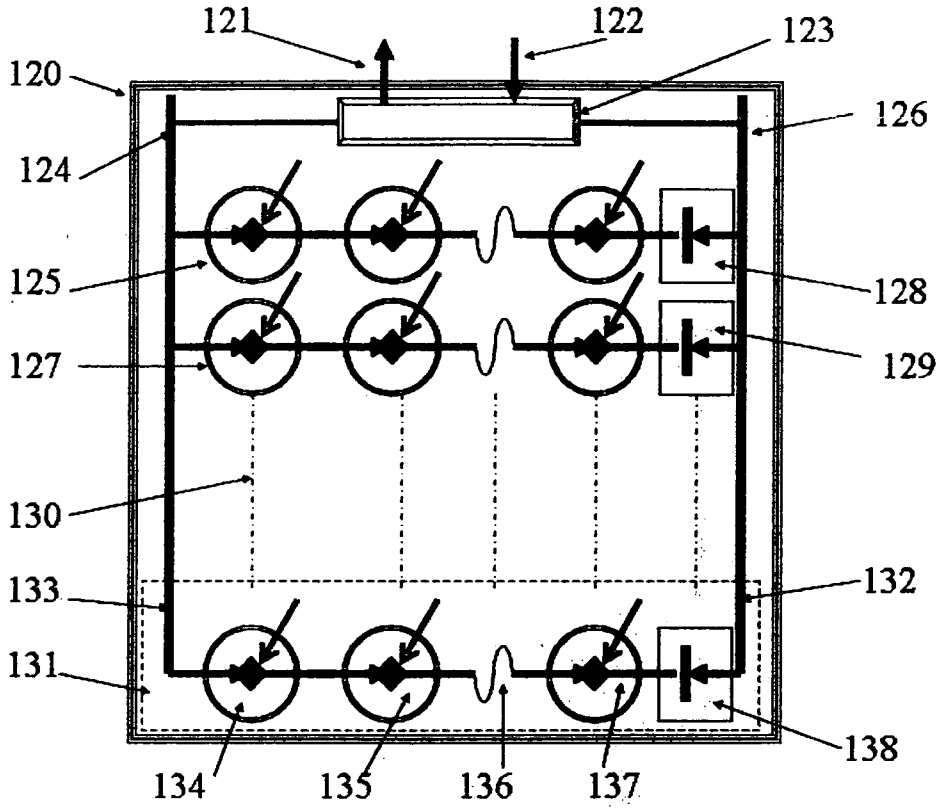


120 – the cell

121, 122 – the outputs of the commuting circuit

123 – commuting circuit

124 – end of circuit

125 – opto-electric module

126 – end of circuit

127 – opto-electric module

128 – protection diode

129 – protection diode

130 – other opto-electric elements inside the cell

131 – series circuit

132, 133 – current outputs of series circuit (131)

134, 135, 136, 137 – photocells

138 – protection diode

**Figure 8**

Assembly for energy accumulation and delivery

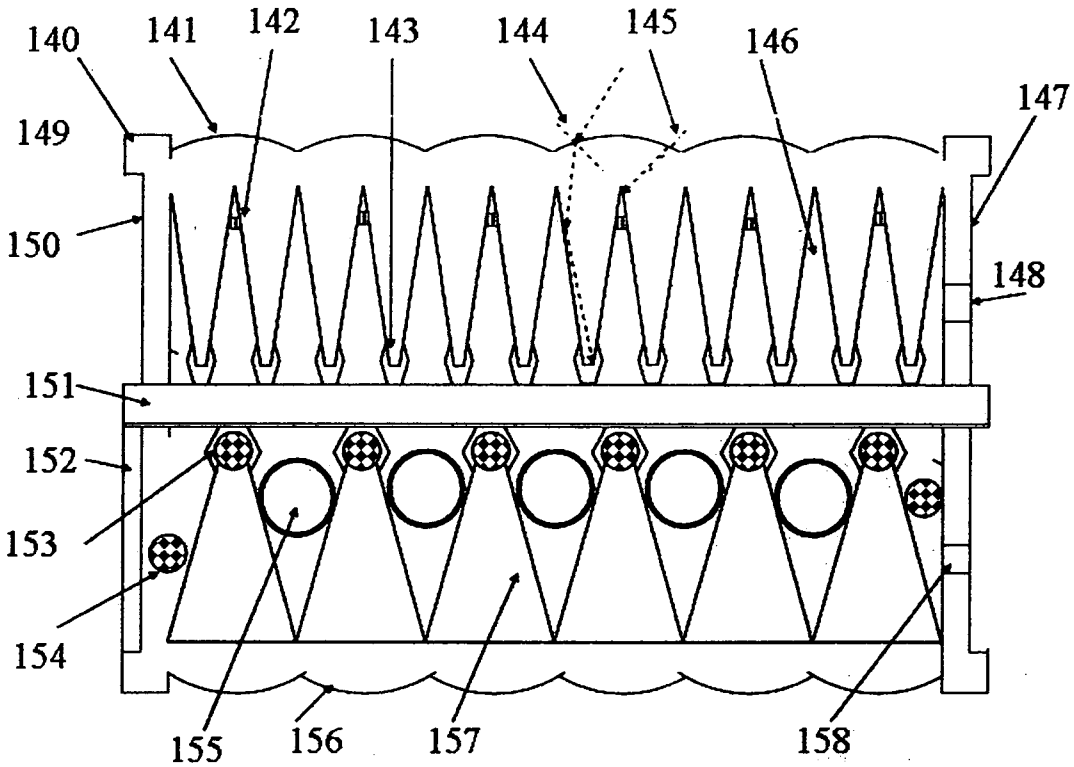


140 – extern cell/receiver module

141 – profiled extern and antireflective treated surface

142, 143 – receiver modules

144, 145 – rays of light

146 – interstitial space for thermal agent

147 – side wall with profile for grid connection

148 – output orifices for cables and cooling tubes

149 – harsh/abrasive profile surface

150 – grid mounting place

151 – ceramic or glass pane for separation

152 – intern cell

153, 154 – lighting elements

155 – accumulator batteries

156 – protection, ornamental cover

157 – cover for intern profile with ornamental or functional effect – light direction

158 – connectors

**Figure 9**

The action system for the solar pane in the mobile roof

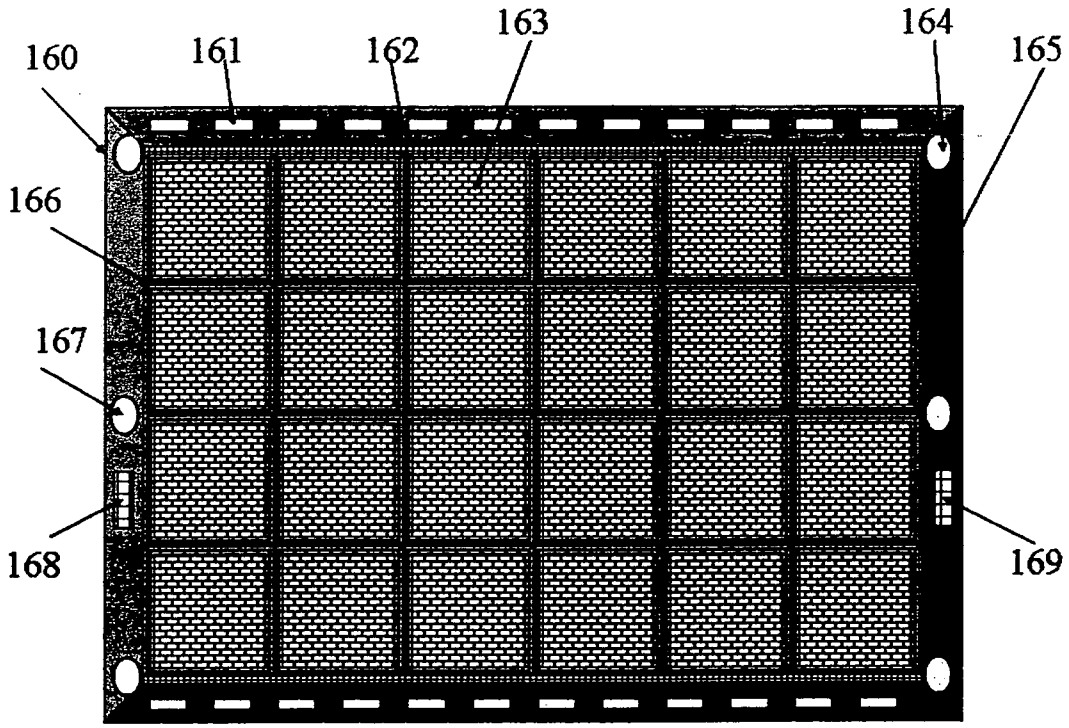


160 – pane

161, 162 – profiled structures

163 – solar cells

164 – mounting place

165 – pane frame

166 – profiled structure

167 – mounting place

168 – electric connector

169 – thermal connector

**Figure 10**

The integrate system for solar alimentation with greenhouse and Aeolian station with or without network release

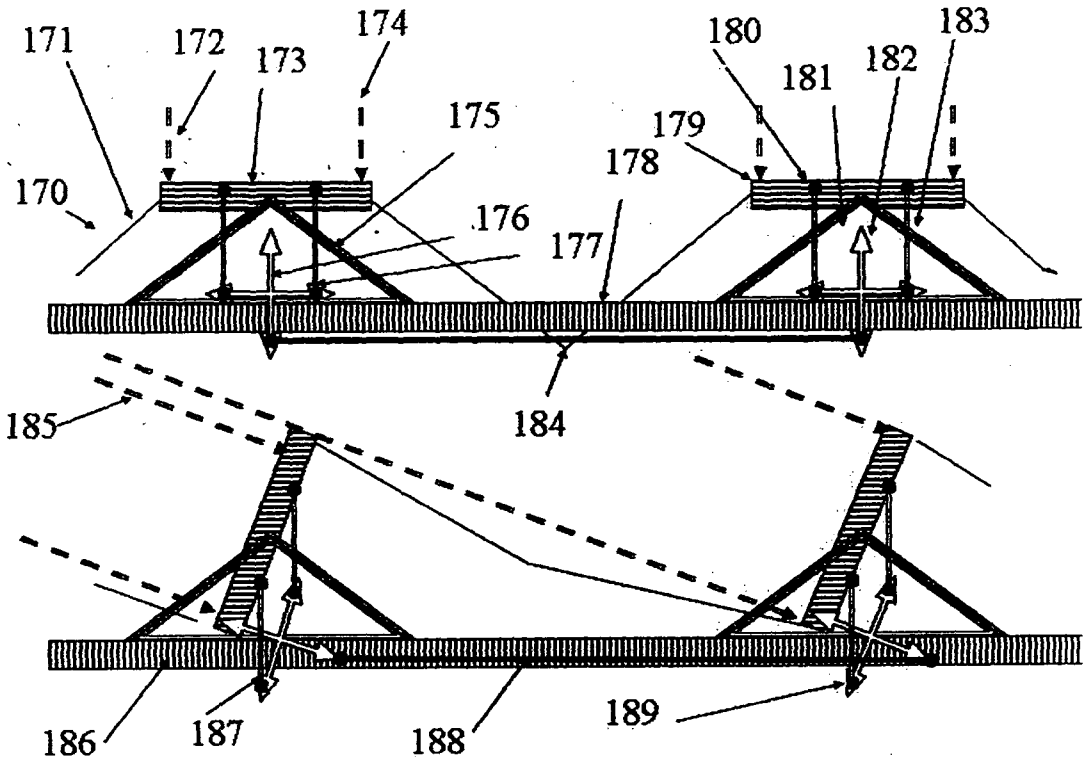


170 – morph transparent roof

171 – simple transparent pane

172 – rays of light

173 – solar pane

174 – rays of light

175 – solar pane support

176 – wheels or crosses for changing the action direction

177 – side arm

178 – support beam

179 – profiled frame/ axial rotation bearing and hinges

180 – bearing for rod action at mobile pane

181 – solar pane support

182 – wheels or crosses for changing the action direction

183 – profiled frame/side arm

184 – roof frame/horizontal rod

185 – rays of light

186 – ceiling support rod

187 - wheels or crosses for changing the action direction/side arm

188 – roof frame/horizontal rod

189 - wheels or crosses for changing the action direction/side arm

**Figure 11**

Example of fixed pane application for transport – highway case

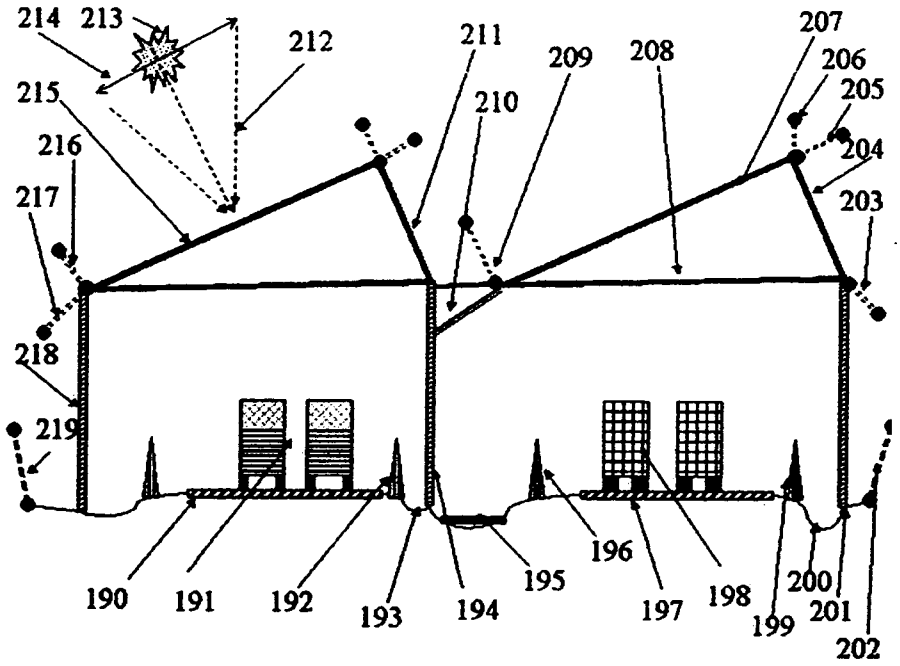


190 – coming lane

191 – coming traffic

192 – side protection

193 – central green space

194 – central support pillars

195 – emergency and service way

196 – central side protection

197 – going lane

198 – going traffic

199 – side protection

200 – free/green space

201 – side support pillar

202 – side fence for exclusion zone

203 – wind deflection wire

204 – pane side wall

205 – side wind deflector

206 – vertical wind deflector

207 – fixed solar pane

208 – support beam

209 – wind-birds deflector

210 – gusset

211 – northern side pane

212 – sun rays at summer solstice

213 – sun at equinox and at noon

214 – sun angle movement

215 – fixed solar pane

216 – vertical wind deflector

217 – side wind deflector

218 – side pillar

219 – side fence for exclusion zone