(12) INTERNATIONAL APPLICATION PUBLISHED UNDER THE PATENT COOPERATION TREATY (PCT)

(19) World Intellectual Property Organization
International Bureau

(43) International Publication Date
12 December 2024 (12.12.2024)

WIPO | PCT

(10) International Publication Number
WO 2024/252322 A1

(51) International Patent Classification:
B63B 3/66 (2006.01) *B63B 1/36* (2006.01)
B63H 5/14 (2006.01) *B63B 13/02* (2006.01)
B63H 5/16 (2006.01) *B63H 11/01* (2006.01)
B63H 25/46 (2006.01)

(21) International Application Number:
PCT/IB2024/055541

(22) International Filing Date:
06 June 2024 (06.06.2024)

(25) Filing Language: Italian

(26) Publication Language: English

(30) Priority Data:
102023000011649 07 June 2023 (07.06.2023) IT

(71) Applicant: **FINCANTIERI S.P.A.** [IT/IT]; Via Genova, 1, I-34121 TRIESTE (IT).

(72) Inventors: **CAVALIERE, Rocco**; c/o FINCANTIERI S.P.A., Via Genova, 1, I-34121 TRIESTE (IT). **CAIZZI, Antonio**; c/o FINCANTIERI S.P.A., Via Genova, 1, I-34121 TRIESTE (IT). **MARTINUCCI, Ettore**; c/o FINCANTIERI S.P.A., Via Genova, 1, I-34121 TRIESTE (IT). **MARTINI, Luca**; c/o FINCANTIERI S.P.A., Via Genova, 1, I-34121 TRIESTE (IT).

(74) Agent: **GAMBA, Alessandro** et al.; c/o JACOBACCI & PARTNERS S.P.A., Piazza della Vittoria, 11, I-25122 BRESCIA (IT).

(81) Designated States *(unless otherwise indicated, for every kind of national protection available)*: AE, AG, AL, AM, AO, AT, AU, AZ, BA, BB, BG, BH, BN, BR, BW, BY, BZ, CA, CH, CL, CN, CO, CR, CU, CV, CZ, DE, DJ, DK, DM, DO, DZ, EC, EE, EG, ES, FI, GB, GD, GE, GH, GM, GT, HN, HR, HU, ID, IL, IN, IQ, IR, IS, IT, JM, JO, JP, KE, KG, KH, KN, KP, KR, KW, KZ, LA, LC, LK, LR, LS, LU, LY, MA, MD, MG, MK, MN, MU, MW, MX, MY, MZ, NA, NG, NI, NO, NZ, OM, PA, PE, PG, PH, PL, PT, QA, RO, RS, RU, RW, SA, SC, SD, SE, SG, SK, SL, ST, SV, SY, TH, TJ, TM, TN, TR, TT, TZ, UA, UG, US, UZ, VC, VN, WS, ZA, ZM, ZW.

(54) Title: SHIP TRANSVERSE PROPULSION DEVICE COMPRISING AT LEAST ONE DOOR

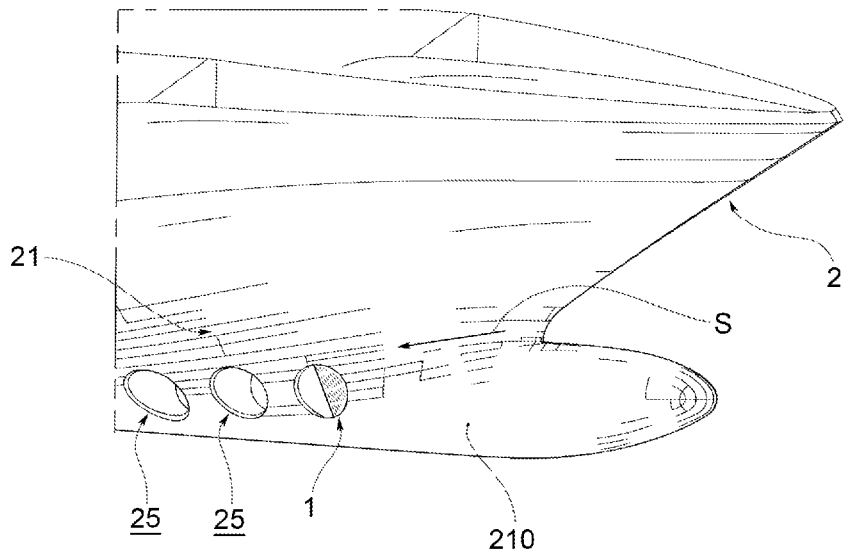

FIG.2

(57) Abstract: A ship transverse propulsion device comprising a transverse maneuvering tunnel (25) through the hull (21), and opening edges (26) divided into a first edge portion (261) intended to be lapped first by the external water flow (200) flowing along the hull (21). The opening edges (26) delimit a tunnel inlet opening (28), which is divided into a first half area (281) partially delimited by the first edge portion (261), and a complementary second half area (282). The transverse propulsion device comprises at least one door (13) which can be moved between a limit opening position and a limit closing position. In the limit closing position, the at least one door (13) at least partially occludes the first half area (281) and leaves the second half area (282) at least partially open, at least partially allowing the passage of water through the second half area (282).

WO 2024/252322 A1

[Continued on next page]

(84) Designated States *(unless otherwise indicated, for every kind of regional protection available)*: ARIPO (BW, CV, GH, GM, KE, LR, LS, MW, MZ, NA, RW, SC, SD, SL, ST, SZ, TZ, UG, ZM, ZW), Eurasian (AM, AZ, BY, KG, KZ, RU, TJ, TM), European (AL, AT, BE, BG, CH, CY, CZ, DE, DK, EE, ES, FI, FR, GB, GR, HR, HU, IE, IS, IT, LT, LU, LV, MC, ME, MK, MT, NL, NO, PL, PT, RO, RS, SE, SI, SK, SM, TR), OAPI (BF, BJ, CF, CG, CI, CM, GA, GN, GQ, GW, KM, ML, MR, NE, SN, TD, TG).

Declarations under Rule 4.17:

— *as to applicant's entitlement to apply for and be granted a patent (Rule 4.17(ii))*

Published:

— *with international search report (Art. 21(3))*

— *in black and white; the international application as filed contained color or greyscale and is available for download from PATENTSCOPE*

"SHIP TRANSVERSE PROPULSION DEVICE COMPRISING AT LEAST ONE DOOR"

DESCRIPTION

[0001] The present invention relates to a ship transverse propulsion device.

[0002] Preferably, the present invention is aimed at large ships, such as container ships or cruise ships.

[0003] In the context of ship handling, it is known that, in order to carry out berthing and unberthing maneuvers in confined spaces and at low speeds, special transverse propulsion devices provided with maneuvering propellers with a rotation axis oriented transversely to the vertical longitudinal plane or diametrical plane of the vessel are indispensable.

[0004] In order to protect the transverse propulsion devices from possible shocks, it is known to affix gratings to the inlet opening of the maneuvering tunnel transverse to the hull of the ship, in which the maneuvering propellers are housed.

[0005] Additionally, in order to reduce turbulence phenomena during navigation, it is known to include special closing devices provided with movable doors, typically placed at the openings of the transverse maneuvering tunnels. The doors are movable between an open position, in which they allow a water flow inside

the maneuvering tunnel, and a closed position, in which they completely close the tunnel inlet opening and substantially reconstruct the outer hull surface.

[0006] In particular, doors are known which are installed on a plurality of hinges connected to the mouth of the transverse maneuvering tunnel. Examples of these solutions are described in JP2015147532A, KR101292883B1, WO2022/079655A1, US3408974A, CN111516842B, CN111498073A, CN108163169A, CN205819525, CN105329405, CN102381439, CN109094715, WO2019/220152 and GB782628. Further embodiment examples are described in International Applications WO2022079655A1, WO2022079651A1 and WO2022079652A1, on behalf of the Applicant.

[0007] Such transverse maneuvering tunnel closing devices have many critical aspects known to designers in the naval field.

[0008] The main problems include the design of the hydrodynamic shape of the doors, aimed at minimizing, during cruising, turbulence due to shape discontinuities between the doors and the outer hull surface, and at the same time aimed at minimizing bulk in the open position, i.e., during the operation of the transverse propulsion devices.

[0009] At the same time, the closing devices of the transverse maneuvering tunnels have high structural

complexity and contribute to increasing the overall weight of the ship.

[0010] Additionally, the transverse maneuvering tunnel closing devices must be designed to minimize the potentially damaging effects of the slamming phenomena of the ship's hull (generally the bow) abruptly plunging into water, e.g., due to the wave motion of the water. Especially at high speeds, such slamming phenomena generate high pressure gradients at the transverse maneuvering tunnels, and can cause damage to the ship's plating and connections, or impair the operation of the doors and the transverse propulsion device.

[0011] Such critical aspects and related problems push designers towards conflicting technical solutions, on the one hand towards the complete closure of the maneuvering tunnel inlet opening to better reconstruct the hydrodynamic shape of the hull, and on the other hand towards the opening of the inlet openings to eliminate any sudden pressure gradients between the inside and outside of the maneuvering tunnel, and at the same time lighten the hull.

[0012] The object of the present invention is to make a transverse propulsion device which makes it possible to overcome the drawbacks highlighted for the solutions of the prior art.

[0013] For example, one of the objects of the present invention is to make a transverse propulsion device which generates low resistance and turbulence during cruising.

[0014] Further, an object of the present invention is to provide a transverse propulsion device which preserves the mainly laminar flows of water externally lapping the ship's hull, particularly near the inlet openings of the transverse maneuvering tunnels.

[0015] Still further, an object of the present invention is to eliminate or dampen the formation of high pressure gradients between the inside and outside of the transverse maneuvering tunnel, typically due to the slamming phenomena of the ship's hull.

[0016] Still a further object of the present invention is to provide a structurally simple transverse propulsion device having a reduced number of components, which can be easily configured in opening and closing, and thus simplify the related installation and maintenance.

[0017] These and other objects are achieved by means of a transverse propulsion device of a ship according to claim 1. The dependent claims show preferred embodiments involving a series of advantageous technical effects.

[0018] The features and advantages of the invention will be evident from the description below, from its preferred embodiment examples and the accompanying figures, in

which:

- figure 1 shows a detail of a hull of a ship having a plurality of maneuvering tunnels and a closing device associated with each maneuvering tunnel, according to an embodiment of the invention;

- figure 2 illustrates a forward part of a ship, having a plurality of maneuvering tunnels made in the hull, and a closing device associated with a maneuvering tunnel, according to an embodiment of the invention;

- figure 3 depicts a cross-sectional view of the ship's hull at the transverse maneuvering tunnel, according to an embodiment of the invention;

- figure 4 depicts some components of the transverse propulsion device, with the door in the closing position, according to an embodiment of the invention;

- figure 5 depicts some components of the transverse propulsion device, with the door in the opening position, according to an embodiment of the invention;

- figure 6 shows a rear view of some components of the transverse propulsion device, with the door in the closing position, according to an embodiment of the invention;

- figure 7 depicts a top view of some components of the transverse propulsion device, with the door in the opening position, according to an embodiment of the

invention;

- figure 8 shows some components of the transverse propulsion device, with the door in the closing position, according to an embodiment of the invention;

- figure 9 depicts in perspective view some components of a plurality of transverse propulsion devices, according to an embodiment of the invention;

- figure 10 illustrates a side view of some components of figure 9;

- figures 11 and 12 illustrate an orthogonal view of the transverse propulsion device, with the door in the closing and opening position, respectively, according to a different embodiment of the invention with respect to figures 1 to 10;

- figures 13 and 14 depict a perspective view of a portion of the hull with two transverse propulsion devices, with the door in the closing and opening position, respectively, in accordance with the embodiment of figures 11 and 12;

- figure 15 illustrates a longitudinal section of the ship, according to a RANSE-CFD computational fluid-dynamic simulation of the variation of pressures along the outer hull surface;

- figure 16 depicts an enlarged detail of figure 15 in a region containing a pair of transverse maneuvering

tunnels;

- figure 17 illustrates a longitudinal section of the ship, according to a RANSE-CFD computational fluid-dynamic simulation of the variation of external water flow speeds along the outer hull surface;

- figure 18 depicts an enlarged detail of figure 17 in a region containing a pair of transverse maneuvering tunnels;

- figure 19 depicts a longitudinal section of the ship, according to a RANSE-CFD computational fluid-dynamic simulation of the variation of the kinetic energy of external water flow turbulence along the outer hull surface;

- figure 20 depicts an enlarged detail of figure 19 in a region containing a pair of transverse maneuvering tunnel.

[0019] With reference to the attached figures, the reference number 1 indicates a transverse propulsion device as a whole. The reference number 2 indicates a ship as a whole.

[0020] The ship 2 comprises a hull 21, which comprises an outer hull surface 210. During cruising, an external water flow 200 flows locally along the outer hull surface 210, along a flow direction S.

[0021] Generally, the ship 2 comprises a bulbous bow 29

projecting in front, configured to direct the external water flow 200 along the outer hull surface 210, in particular along the flow direction S. The flow direction S is typically inclined with respect to a horizontal bottom plane (extending mainly along the keel of the ship) by a flow angle comprised between 5 degrees and 60 degrees.

[0022] Under conditions of the ship's forward motion and navigation at cruising speed, the external water flow 200 flows along the outer hull surface 210 at high speeds.

[0023] Cruising speed is intended as ship navigation speeds between 10 knots and 25 knots, preferably equal to around 18 knots.

[0024] High external water flow speeds are defined as speeds close to or greater than 4 meters per second, preferably greater than 5 meters per second, e.g., between 7 and 10 meters per second. Conversely, low external water flow speeds are intended as speeds close to or below 2.5 meters per second, e.g., about equal to 1 meter per second.

[0025] In an embodiment, the present invention relates to a hull of a ship 2 comprising the transverse propulsion device 1.

[0026] In an embodiment, the present invention relates to a ship 2 comprising the transverse propulsion device 1.

[0027] The transverse propulsion device comprises a transverse maneuvering tunnel 25 extending transversely in the hull of the ship, preferably open on both longitudinal sides of the ship.

[0028] The transverse propulsion device comprises at least one maneuvering propeller 9 housed in the transverse maneuvering tunnel 25 and configured to move water through the tunnel inlet opening 28 in an operating transverse propulsion device configuration.

[0029] The transverse maneuvering tunnel 25 comprises tunnel walls 27 which peripherally delimit the transverse maneuvering tunnel 25 inside the hull 21.

[0030] The transverse maneuvering tunnel 25 comprises a tunnel axis X oriented incidentally to the outer hull surface 210, e.g., along which the tunnel walls 27 mainly extend.

[0031] The transverse maneuvering tunnel 25 comprises opening edges 26 extending at least partially about the tunnel axis X and delimiting a tunnel inlet opening 28, open on the outer hull surface 210.

[0032] Specifically, the tunnel inlet opening 28 is placed on the projection of the outer hull surface 210 between the opening edges 26.

[0033] In an embodiment, the opening edges 26 are connected to the tunnel walls 27 with a connecting radius between

100 and 500 millimeters, preferably between 200 and 400 millimeters.

[0034] In an embodiment, the opening edges comprise a markedly flared aft section, located downstream of the transverse maneuvering tunnel along the flow direction, having the purpose of facilitating the external water flow.

[0035] Preferably, the transverse maneuvering tunnel further comprises second opening edges delimiting a tunnel exit opening opposite the tunnel inlet opening 28.

[0036] Along the flow direction S, the opening edges 26 are divided into a first edge portion 261 and a second edge portion 262 complementary to the first edge portion 261, both having extension around the tunnel axis X, e.g., a substantially circular or oval or elliptical extension.

[0037] Along the flow direction S, the first edge portion 261 is destined to be lapped by the external water flow 200 first.

[0038] In other words, along the flow direction S, the external water flow 200 initially encounters the first edge portion 261 and subsequently the second edge portion 262.

[0039] In still other words, the first edge portion 261 substantially, at least partially, towards the bow of the ship, extending around the tunnel axis X according to the

flow direction S.

[0040] In still other words, the opening edges 26 consist of the first edge portion 261 and the second edge portion 262.

[0041] Similarly, the tunnel inlet opening 28 is divided into a first half area 281 partially delimited by the first edge portion 261, and a second half area 282 complementary to the first half area 281 and partially delimited by the second edge portion 262.

[0042] In other words, along the flow direction S, the external water flow 200 encounters the first half area 281 and then the second half area 282.

[0043] In still other words, the tunnel inlet opening 28 consists of the first half area 281 and the second half area 282.

[0044] The transverse propulsion device comprises at least one door 13 associated with the tunnel inlet opening 28.

[0045] In an embodiment, the transverse propulsion device comprises a plurality of doors 13 associated with the tunnel inlet opening 28.

[0046] In an embodiment, the transverse propulsion device comprises a single door 13 associated with the tunnel inlet opening 28.

[0047] The at least one door 13 is movable between a limit opening position and a limit closing position.

[0048] Specifically, the transverse propulsion device is preferably configured so that, in the closing position, the at least one door 13 cooperates with the outer hull surface 210 to achieve overall a hydro-dynamically shaped surface along which the external water flow 200 flows.

[0049] Still more specifically, in an embodiment, the at least one door 13 preferably comprises a peripheral door edge 130 having at least partially a shape substantially complementary to the first edge portion 261, or a section of said first edge portion 261. In the limit closing position, the peripheral door edge 130 is adjacent and/or at least partially in contact with the complementary first edge portion 261 or with the at least one section of said first edge portion 261. As a whole, the at least one section of said first edge portion 261 or the entire first edge portion 261 cooperates with the peripheral door edge 130 to create a hydrodynamic surface along which the external water flow 200 flows.

[0050] In an embodiment, the peripheral door edge 130 is essentially circular.

[0051] In an embodiment, the at least one door 13 basically has a planar shape on a door plane Q. In the closing position, the door plane Q is substantially parallel to the flow direction S, and in the opening position the door plane Q is incident, preferably substantially

transverse, to the flow direction S.

[0052] In an embodiment, the at least one door 13 has a door area on the door plane Q substantially equal to the first half area 281 of the tunnel inlet opening 28.

[0053] In an embodiment, in the closing position, the at least one door 13 extends mainly along the projection of the outer hull surface 210 along the tunnel inlet opening 28, so as to ideally reconstruct a hydrodynamic surface for the external water flow 200.

[0054] In the limit opening position, the at least one door 13 allows the flow of a maximum water flow rate through the tunnel inlet opening 28, and in the limit closing position the at least one door 13 allows the flow of a minimum water flow rate through the tunnel inlet opening 28, at the same water passage speed (average speed) through the tunnel inlet opening 28.

[0055] In other words, in the limit closing position, the at least one door 13 only partially occludes the tunnel inlet opening 28, allowing the flow of the minimum water flow rate through the tunnel inlet opening 28.

[0056] In other words, in the limit closing position of at least one door 13, the tunnel inlet opening 28 is only partially occluded.

[0057] In the limit closing position, the at least one door 13 occludes the first half area 281 of the tunnel inlet

opening 28, preventing the passage of water through the first half area 281. At the same time, in the limit closing position, the at least one door 13 leaves the second half area 282 at least partially open.

[0058] In other words, at least one door 13 in the closing position reduces the water flow allowed through the tunnel inlet opening 28.

[0059] Therefore, in a predefined operational configuration of the transverse propulsion device, with the at least one door 13 in the closing position, a predefined minimum water flow rate is allowed to pass through; while with the at least one door 13 in the opening position, a predefined maximum water flow rate is allowed to pass through the tunnel inlet opening 28.

[0060] Furthermore, with the ship stationary or at low speeds, e.g., speeds of less than 2.5 knots, with the at least one door 13 in the closing position, and with the transverse propulsion device switched off, the passage of water is allowed through the tunnel inlet opening 28, in particular through the second half area 282.

[0061] In an embodiment, the transverse maneuvering tunnel 25 comprises an inlet plane P incident to the tunnel axis X, and the tunnel inlet opening 28 has an inlet area A on the inlet plane P.

[0062] In an embodiment, the inlet plane P is transverse to

the tunnel axis X.

[0063] In an embodiment, the inlet plane P is essentially passing through the opening edges 26.

[0064] In an embodiment, the tunnel inlet opening 28 can be approximated to an imaginary inlet circumference extending around the tunnel axis X on the inlet plane P, which delimits the inlet area A.

[0065] In an embodiment, the first edge portion 261 corresponds to a circumferential arc of the imaginary inlet circle subtended by an angle less than 180 degrees, preferably less than 150 degrees, even more preferably less than 140 degrees.

[0066] In an embodiment, the first edge portion 261 corresponds to a circumferential arc of the imaginary inlet circle subtended by an angle comprised between 100 and 140 degrees, preferably comprised between 120 and 130 degrees.

[0067] In an embodiment, the flow direction S is essentially secant to the angle subtending the circumferential arc corresponding to the first edge portion 261.

[0068] In an embodiment, in the closing position, the door plane Q is essentially parallel to the inlet plane P.

[0069] In an embodiment, the at least one door 13 extends mainly along an imaginary chord of the tunnel inlet

opening 28 defined on the inlet plane P, preferably oriented incidentally or transverse to the flow direction S.

[0070] In an embodiment, the at least one door 13 comprises a substantially straight rear door edge opposite the peripheral door edge 130.

[0071] In an embodiment, the rear door edge extends mainly along an imaginary chord of the tunnel inlet opening 28 defined in the inlet plane P, preferably oriented incidentally or transverse to the flow direction S (figure 8).

[0072] In an embodiment, the at least one door 13 substantially has the shape of a circular sector (figure 5).

[0073] In an embodiment, the rear door edge and the peripheral door edge 130 are curved, whereby the rear door edge has a lower concavity with respect to the concavity of the peripheral door edge 130, with respect to the tunnel axis X.

[0074] In an embodiment, the rear door edge and the peripheral door edge 130 intersect along the opening edges 26, delimiting the geometry of the at least one door.

In an embodiment, the transverse propulsion device comprises at least two adjacent doors 13, each rotatable

around a rotation axis thereof. Overall, the two doors 13 in the closing position occlude the first half area 281.

[0075] In an embodiment, the at least one door 13 divides the inlet area A into a free half area F, through which the passage of the predefined minimum water flow rate is allowed, and an occluded half area O, through which the passage of water is prevented.

[0076] In an embodiment, the occluded half area O is between 15% and 60% of the inlet area A. Preferably, the occluded half area O is between 25% and 50% of the inlet area A. For example, in an embodiment, the occluded half area O is approximately 30% of the inlet area A.

[0077] In an embodiment, in the limit closing position, the first half area 281 essentially corresponds to the occluded half area O.

[0078] The at least one door 13 comprises an inner face 138 and an opposite outer face 139. In the closing position, the inner face 138 faces the transverse maneuvering tunnel 25.

[0079] In the closing position, the outer face 139 is preferably positioned on the projection of the outer hull surface 210 along the tunnel inlet opening 28.

[0080] In an embodiment, the outer face 139 is a continuous surface, free of holes, depressions or protrusions.

[0081] In an embodiment, the at least one door 13 comprises

at least one through slit 133 between the inner face 138 and the outer face 139. Preferably, the at least one door 13 comprises a plurality of slits 133.

[0082] In the closing position, at low speeds of the external water flow, the at least one slit 133 can be crossed by water, in particular both by water coming from inside the transverse maneuvering tunnel 25 and directed towards the outside of the hull 21, and by water coming from outside the hull 21 and directed towards the inside of the transverse maneuvering tunnel 25.

[0083] In other words, in the closing position, at low external water flow speeds, the at least one door 13 occludes the first half area 281 of the tunnel inlet opening 28, except for the at least one slit 133. In still further words, the at least one slit 133 identifies a portion of the free half area F inside the occluded half area O.

[0084] In other words, in the limit closing position, the first half area 281 preferably essentially corresponds to the occluded half area O minus the at least one slit 133.

[0085] In an embodiment, with the at least one door 13 in the limit closing position and external water flow 200 flowing along the flow direction S at high speeds, preferably speeds greater than 4 meters per second, the at least one slit 133 is configured to restrict or

prevent the external water flow 200 from flowing inside the transverse maneuvering tunnel 25 through said slit 133.

[0086] In an embodiment, the at least one slit 133 is substantially slot-shaped, having a main extension in a direction substantially orthogonal to the flow direction S, when the at least one door 13 is in the closing position.

[0087] "Slot" is intended as an opening in a body, in this case a door 13, delimited by a closed perimeter. For example, the slot is a through opening. For example, the slot has a first major slit dimension along an extension direction E-E, or longitudinal extension, and a second minor slit dimension in the direction transverse to said extension direction E-E.

[0088] In an embodiment, the extension direction E-E is essentially orthogonal to the flow direction S. In other words, preferably the at least one slit 133 comprises a second smaller slit dimension oriented parallel to the flow direction S.

[0089] In an embodiment, the door 13 comprises at least three slits 133 having respective extension directions E-E. In an embodiment, said at least three slits 133 comprise the respective extension directions E-E parallel to each other.

[0090] In an embodiment, the door 13 comprises at least three slits 133 having the respective extension direction E-E. In an embodiment, said at least three slits 133 comprise respective extension directions E-E parallel to each other and the at least three slits 133 are at least partially facing each other in a direction transverse to said extension direction E-E.

[0091] In an embodiment, at least two slits 133 are provided arranged consecutively with each other along the common extension direction E-E, or with the respective extension directions E-E side-by-side along the flow direction S. These at least two slits 133 are spaced apart from each other.

[0092] In an embodiment, the door 13 comprises a plurality of slits 133 at least grouped together with each other. In accordance with an embodiment, these groups are facing each other and overall substantially evenly distributed over a portion between 60% and 90% of the door 13.

[0093] In an embodiment, the door 13 comprises a plurality of slits 133 subdivided into groups of slits, where the groups of slits are overlapping or facing each other in a direction transverse to the flow direction S. In an embodiment, each group of slits comprises at least two, preferably at least three, even more preferably at least four slits 133.

[0094] In an embodiment, the at least one door 13 comprises a plurality of lightening through holes between the inner face and the outer face.

[0095] In an embodiment, the transverse propulsion device comprises a grid 4 positioned near or at the tunnel inlet opening 28.

[0096] The grid 4 comprises a plurality of uprights 41 substantially parallel to each other and oriented substantially orthogonal to the flow direction S. The grid 4 also comprises a plurality of crosspieces 42 oriented incident to the uprights 41, preferably oriented substantially parallel to the flow direction S.

[0097] The grid 4 is positioned behind the at least one door 13 along the tunnel axis X. In other words, along the tunnel X axis, the at least one door 13 is external with respect to the grid 4.

[0098] In an embodiment, the grid 4 is fixed to the opening edges 26.

[0099] In an embodiment, the grid 4 is fixed to the opening edges 26, in a removable manner, e.g., by means of bolted screws.

[00100] In an embodiment, the grid 4 extends with respect to the entire tunnel inlet opening 28.

[00101] In an embodiment, the grid 4 extends with respect to the first half area 281 and the second half

area 282. In other words, preferably the grid 4 engages the first edge portion 261 and the second edge portion 262.

[00102] In an embodiment, the grid 4 extends from the second half area 282 and is interrupted substantially near or at the at least one door 13.

[00103] In an embodiment, the grid 4 extends with respect to the second half area 282 and only partially with respect to the first half area 281.

[00104] In an embodiment, the grid 4 extends substantially only with respect to the second half area 281.

[00105] In an embodiment, the grid 4 is essentially only engaged to the second edge portion 262.

[00106] In an embodiment, the grid 4 is substantially aligned with at least one door 13 along the flow direction S.

[00107] In an embodiment, all or only some uprights 41 and all or only some crosspieces 42 intersect and delimit a plurality of functional through windows 40 therebetween.

[00108] In an embodiment, the grid 4 is configured so as to prevent or limit the passage of external water flow 200 through said functional through windows 40, with the at least one door 13 in the limit closing position and

with external water flow 200 flowing along the flow direction S at high speeds.

[00109] In an embodiment, for all or only some functional through windows 40, the upright distance D along the flow direction S between two consecutive uprights 41 delimiting a functional through window 40 is between 150 and 250 millimeters.

[00110] In an embodiment, the upright distance D is between 180 and 220 millimeters.

[00111] In an embodiment, for all or only some functional through windows 40, the distance between two crosspieces 42 delimiting a functional through window 40 is between 300 and 500 millimeters, e.g., equal to 400 millimeters.

[00112] In an embodiment, all or only some of the functional through windows 40 have a substantially rectangular shape, with the longer side oriented in a direction substantially transverse to the flow direction S.

[00113] In an embodiment, all or only some of the functional through windows 40 are substantially rectangular in shape, with the longer side of the rectangle being equal to approximately twice the shorter side of the rectangle, where the longer side is the crosspiece distance and/or where the shorter side is the

upright distance D.

[00114] In an embodiment, each functional through window 40 has a first side equal to the crosspiece distance, and a second side equal to the upright distance D, where the first side is greater than the second side.

[00115] In an embodiment, the first side is oriented along the extension direction E-E of the slits 133.

[00116] In an embodiment, the second side is oriented in a direction transverse to the extension direction E-E of the slits 133.

[00117] In an embodiment, each functional through window 40 has an elongated or essentially rectangular shape.

[00118] In an embodiment, the main extension of said rectangular functional through window 40 is parallel to said main extension direction E-E of said slit 133.

[00119] In an embodiment, with the transverse maneuvering tunnel 25 at least partially filled with water, the at least one door 13 in the limit closing position and external water flow 200 flowing along the flow direction S at high speeds, preferably speeds greater than 4 meters per second, the transverse propulsion device is configured so as to keep the water inside the transverse maneuvering tunnel 25 at low speeds along the tunnel axis X, preferably speeds less than 2.5

meters per second.

[00120] In an embodiment, with the at least one door 13 in the limit closing position and with external water flow 200 flowing along the flow direction S at high speeds, preferably speeds greater than 4 meters per second, the functional through windows 40 are configured to cooperate with each other and create a low-friction hydrodynamic surface which favours the external water flow 200 along the flow direction S.

[00121] In an embodiment, with the at least one door 13 in the limit closing position and with external water flow 200 flowing along the flow direction S at high speeds, preferably speeds greater than 4 meters per second, the functional through windows 40 are configured to cooperate with each other and limit or prevent the external water flow 200 crossing the functional through windows 40, towards the inside of the transverse maneuvering tunnel 25.

[00122] In an embodiment, with the at least one door 13 in the limit closing position and with external water flow 200 flowing along the flow direction S at high speeds, preferably speeds greater than 4 meters per second, the functional through windows 40 are configured to retain water at low speeds, preferably speeds less than 2.5 meters per second, at said functional through

windows 40 and/or inside the transverse maneuvering tunnel 25 near said functional through windows 40.

[00123] In an embodiment, the uprights 41 have a reduced size along the flow direction S. In other words, with respect to the flow direction S, the uprights are thin.

[00124] In an embodiment, the grid 4 comprises an upright surface 45, along which the uprights 41 are arranged, preferably substantially aligned along the flow direction S.

[00125] The upright surface 45 is an imaginary surface which is at least partially curved in space, identified by the position of the transverse maneuvering tunnel along the hull and along the flow direction S (figure 9).

[00126] In an embodiment, each functional through window 40 has a functional area Af on the upright surface 45.

[00127] In an embodiment, the functional ratio (Af/A) between the functional area Af and the inlet area A is between 0.05% and 3%.

[00128] Preferably, the functional ratio Af/A is between 1% and 2.5%, e.g., it is equal to about 1.7%.

[00129] In an embodiment, the propulsion device comprises a second grid 49 positioned at the rear of at least one door 13 along the tunnel axis X.

[00130] In an embodiment, the second grid 49 is distinct and separate from the first grid 4.

[00131] In an embodiment, the second grid 49 is joined to the first grid 4 by means of a connecting section extending along the tunnel axis X.

[00132] In an embodiment, the second grid 49 is spaced from the first grid 4 along the tunnel axis X, in particular it is behind the first grid 4.

[00133] In an embodiment, the second grid 49 is spaced from the at least one door 13 along the tunnel axis X.

[00134] In an embodiment, the second grid 49 is fixed to the opening edges 26.

[00135] In an embodiment, the second grid 49 engages the first edge portion 261 and the second edge portion 262.

[00136] In an embodiment, the second grid 49 extends substantially only with respect to the first half area 281.

[00137] In an embodiment, the second grid 49 essentially only engages the first edge portion 261.

[00138] In an embodiment, the second grid 49 comprises uprights spaced from each other by a greater extent than the upright distance D related to the first grid 4, preferably between 300 and 500 millimeters, e.g., equal to 400 millimeters.

[00139] The transverse propulsion device comprises door movement means configured to move the at least one door 13 between the closing position and the opening position.

[00140] In an embodiment, the door movement means are configured to move the at least one door 13 along an allowable door stroke ending when the limit closing position is reached.

[00141] In an embodiment, the door movement means are configured to move the at least one door 13 between the opening position and the closing position in a direction substantially opposite the flow direction S.

[00142] Preferably, the door movement means are configured to rotate the at least one door 13 between the opening position and the closing position along a hinge axis H, preferably oriented substantially orthogonal to the flow direction S.

[00143] In an embodiment, the door movement means comprise at least one hinge member 71, preferably at least one pair of hinge members 71, configured to rotate the at least one door 13 between the opening position and the closing position, about the hinge axis H.

[00144] In an embodiment, the at least one hinge member 71 comprises a rotary actuator, for example electric, hydraulic or electro-hydraulic, configured to rotate the at least one door 13 between the opening position and the

closing position.

[00145] In an embodiment, the at least one hinge member 71 is supported outside the transverse maneuvering tunnel 25, inside the hull 21.

[00146] In an embodiment, the at least one hinge member 71 comprises a hinge pin 72 extending along the hinge axis H, housed inside the hull 21, and a hinge arm 73 hinged to the hinge pin 72 and connected in rotation with the at least one door 13, for example made in a single piece with said at least one door 13, preferably facing outside the hull 21.

[00147] In an embodiment, the hinge arm 73 comprises an outer arm surface which, with the door 13 in the closing position, is preferably positioned on the projection of the outer hull surface 210, creating a hydrodynamic shape overall.

[00148] In an embodiment, the transverse propulsion device comprises a support frame 8 supported by the hull 21 and/or by the tunnel walls 27.

[00149] In an embodiment, the support frame 8 supports the at least one hinge member 71, in particular the hinge pin 72, preferably inside the hull 21.

[00150] In an embodiment, the support frame 8 comprises a single support upright supporting the at least one hinge member 71.

[00151] In an embodiment, the support frame 8 is at least partially housed in the transverse maneuvering tunnel 25 or protrudes at least partially from the tunnel walls 27 in the transverse maneuvering tunnel 25.

[00152] In an embodiment, the support frame 8 supports the at least one hinge member 71 inside the transverse maneuvering tunnel 25.

[00153] In an embodiment, the support frame 8 is engaged to the tunnel walls 27 in a removable manner.

[00154] Preferably, the tunnel walls 27 comprise a plurality of fixing ledges 275 protruding into the transverse maneuvering tunnel 25, and the support frame 8 comprises removable frame fixing elements 85, e.g., bolted screws, configured to engage the fixing ledges 275, fixing the support frame 8 in position.

[00155] Further details related to the hinge member for the movement of the at least one door and the connection methods of the support frame to the tunnel walls are described in International Application WO2022079651A1 on behalf of the Applicant, the teaching of which is expressly incorporated herein.

[00156] In an embodiment, the ship 2 has an overall length greater than 200 meters, e.g., equal to 250 meters.

[00157] In an embodiment, the transverse maneuvering

tunnel 25 has an internal diameter between the tunnel walls 27 between 2.0 meters and 2.8 meters, preferably between 2.1 and 2.5 meters, e.g., 2.2 meters.

[00158] In an embodiment, the grid 4 has a thickness, i.e., dimension of the uprights 41 and the crosspieces 42 along the tunnel axis X, greater than 70 millimetres. Preferably, the thickness of the grid 4 is between 80 and 130 millimeters.

[00159] The mathematical simulations of figures 15 to 20 are conducted using CFD code Star-CCM+, in which the finite-volume formulation is used to solve the Reynolds-Averaged Navier-Stokes equations (RANSE). The free surface is analyzed by means of the fluid volume method (VOF method). The turbulence is obtained using Menter's shear stress transport (SST) with wall functions. The simulation mesh is constructed with prismatic layers around the solid boundaries, augmented in the areas of interest (tunnel, grid, door), according to the DNV standard.

[00160] The mathematical simulations of figures 15 to 20 are conducted at ship navigation speeds or cruising speeds of approximately 18 knots.

[00161] With reference to figures 15 and 16, it can be noted that, at the tunnel inlet openings with the doors in the closing position, the pressure is essentially

constant along the flow direction. At the opening edges, particularly downstream of the opening edges, especially downstream of the second edge portion, a pressure variation of a negative sign occurs (values close to the minimum value -0.3). As can be seen in figure 15, the pressure is essentially constant inside the transverse maneuvering tunnel, through the grid, through the tunnel inlet opening, and near the tunnel inlet opening outside the transverse maneuvering tunnel. The values are different for the two consecutive transverse maneuvering tunnels.

[00162] The unit of measurement for the pressure variation along the ship's hull of figures 15 and 16 is a dimensionless coefficient (Pascal / Pascal) normalized with respect to a reference pressure occurring on the outer hull surface, with a navigation speed of approximately 18 knots, according to Torricelli's principle.

[00163] With reference to figures 17 and 18, it can be noted that the external water flowing along the flow direction S remains substantially constant, at high speeds, i.e., speeds above 4 meters per second, in particular speeds close to about 10 meters per second, even beyond a pair of consecutive transverse maneuvering tunnels. At the same time, the speed of the water inside

the maneuvering tunnels is kept essentially constant, at low speeds along the tunnel axis, i.e., speeds less than 2.5 meters per second, preferably less than 1 meter per second. In figure 18 it can be appreciated how the water inside the functional through windows of the grid and the water inside the maneuvering tunnel near the tunnel inlet opening is also at low speeds along the tunnel axis (values close to zero speed). It can be noted that, in direct proximity to the outer hull surface, the speed of the external water flow reduces to speeds approximately between 4 and 6 meters per second downstream of the first transverse maneuvering tunnel, and remains in such a speed range downstream of the second transverse maneuvering tunnel, along the flow direction.

[00164] With reference to figures 19 and 20, a reduced increase is noted in the kinetic energy due to turbulence, downstream of the at least one door, in particular at and downstream of the grid, along the flow direction. However, the turbulence is outside the grid and the transverse maneuvering tunnel.

[00165] Innovatively, the transverse propulsion device which is the subject-matter of the present invention fulfils the intended object and overcomes the problems typical of the prior art, in that it achieves a compromise between minimizing the potentially damaging

effects of hull slamming and minimizing unwanted turbulence phenomena along the outer hull surface.

[00166] The transverse propulsion device simplifies the hull structure, reduces weight and facilitates the design, installation and maintenance operations.

[00167] Advantageously, the transverse propulsion device minimizes the generation of turbulence at high cruising speeds, preferably at cruising speeds equal to or greater than 9 or 10 knots, at which turbulence resistance significantly impacts the efficiency of the ship.

[00168] Advantageously, the transverse propulsion device according to the present invention has proven excellent results through mathematical simulations. On the merits, with respect to the bare hull, i.e., without transverse maneuvering tunnels, the hull with transverse propulsion device experiences a negligible pressure drop between 1% and 2%. In comparison, the conventional transverse propulsion devices, comprising a plurality of doors which completely close the tunnel inlet opening, generate a pressure drop less than 1%, with respect to the bare hull. Such results confirm one of the theses underlying the present invention, namely that the main causes of resistance and turbulence are to be attributed to the first external water flow which meets the first

portion of the opening edges.

[00169] For a ship between 200 and 250 meters in length, the pair of transverse propulsion devices according to the simulation of figures 15 to 20 results in fuel savings and average annual carbon dioxide emission savings in the order of 10%.

[00170] For a ship between 200 and 250 meters long, the pair of transverse propulsion devices according to the simulation of figures 15 to 20 results in a reduction in turbulence in the order of 10%.

[00171] Advantageously, the at least one door directs the external water flow in a substantially constant manner along the flow direction.

[00172] Advantageously, the at least one door eliminates or reduces unwanted effects due to the presence of the grid.

[00173] Advantageously, at least one door causes completely negligible resistance and turbulence, even with respect to the grid.

[00174] Advantageously, the grid is denser, i.e., it has substantially doubled or tripled the number of uprights, with respect to the grids typically used in the transverse propulsion devices of the prior art, reducing the generation of turbulence.

[00175] Advantageously, the grid has a dimension along

the tunnel axis (thickness) which is greater with respect to the grids typically used in the transverse propulsion devices of the prior art. This contributes to preventing or limiting the crossing of the functional through windows.

[00176] Advantageously, the grid allows the passage of water through the tunnel inlet opening, with an operating transverse propulsion device.

[00177] Advantageously, the grid achieves a compromise between minimizing the throttling effect of the tunnel inlet opening and maximizing the effect of conveying the external water flow at high speeds along the flow direction.

[00178] Advantageously, the grid allows for sudden pressure gradients between the inside and outside of the transverse maneuvering tunnel due to the hull slamming with water.

[00179] Advantageously, the uprights generate a reduced friction against the external water flow along the flow direction.

[00180] Advantageously, at the grid, the external water flow mainly encounters the functional through windows, as the uprights have a reduced dimension (specifically, they have surface area facing the external water flow), thus the external water flow slides with a low friction

coefficient over the water present in the functional through windows.

[00181] Advantageously, with external water flow at high speeds, the functional through windows achieve the closing function of the tunnel inlet opening.

[00182] Advantageously, the grid exploits the kinematic inertia of the external water flow to conduct the water outside the transverse maneuvering tunnel, along the flow direction, minimizing or eliminating the crossings in the functional through windows.

[00183] Advantageously, the through slits in the at least one door allow for sudden pressure gradients due to the hull slamming phenomena with the water. Advantageously, the slits reduce the weight of the at least one door.

[00184] Advantageously, the orientation of the at least one slit, substantially having an extended slotted shape extending mainly in a direction substantially orthogonal to the flow direction, allows maximizing the limitation or prevention of the passage of external water flow through the slit, and at the same time maximizing the weight reduction of the at least one door.

[00185] Advantageously, the grid and the door cooperate to conduct water outside the transverse maneuvering tunnel along the outer hull surface, minimizing friction

and turbulence.

[00186] Advantageously, the structural complexity of the transverse propulsion devices is reduced.

[00187] It is clear that a person skilled in the art may make modifications to the invention described above so as to satisfy contingent requirements, all contained within the scope of protection as defined by the following claims.

[00188] For example, a person skilled in the art could alter the geometry of the at least one door, increase the occluded area of the at least one door, make several doors which are complementary to each other or make a single door with different profiles facing the flow direction.

[00189] According to a further general embodiment of the invention, a transverse propulsion device 1 comprises a transverse maneuvering tunnel 25 comprising tunnel walls 27, a tunnel axis X oriented incidentally to the outer hull surface 210 of the ship, and opening edges 26 extending at least partially around the tunnel axis X, where, along the flow direction S, the opening edges 26 are divided into a first edge portion 261 intended to be lapped first by the external water flow 200, and a second edge portion 262 complementary to the first edge portion 261, where the opening edges 26 delimit a tunnel inlet

opening 28 open on the outer hull surface 210 and divided into a first half area 281 partially delimited by the first edge portion 261, and a second half area 282 complementary to the first half area 281 and partially delimited by the second edge portion 262. The transverse propulsion device 1 comprises at least one door 13 associated with the tunnel inlet opening 28, and door movement means configured to move said at least one door 13 between a limit opening position and a limit closing position, respectively, in which the at least one door 13 allows the flow of a predetermined maximum water flow rate and a predetermined minimum water flow rate through the tunnel inlet opening 28. In the limit closing position, the at least one door 13 at least partially occludes the first half area 281 and leaves the second half area 282 at least partially open, at least partially allowing the passage of water through the second half area 282. The door 13 comprises at least three slits 133 having a slotted shape, each slit 133 having a first major slit dimension along an extension direction E-E and a second minor slit dimension in a direction transverse to said extension direction E-E, where the at least three slits 133 are at least partially facing each other along a direction transverse to at least one of said extension directions E-E, or longitudinal slit direction.

[00190] According to a further general embodiment of the invention, a transverse propulsion device 1 comprises a transverse maneuvering tunnel 25 comprising tunnel walls 27, a tunnel axis X oriented incidentally to the outer hull surface 210 of the ship, and opening edges 26 extending at least partially around the tunnel axis X, where, along the flow direction S, the opening edges 26 are divided into a first edge portion 261 intended to be lapped first by the external water flow 200, and a second edge portion 262 complementary to the first edge portion 261, where the opening edges 26 delimit a tunnel inlet opening 28 open on the outer hull surface 210 and divided into a first half area 281 partially delimited by the first edge portion 261, and a second half area 282 complementary to the first half area 281 and partially delimited by the second edge portion 262. The transverse propulsion device 1 comprises at least one door 13 extending mainly with respect to a door plane Q and associated with the tunnel inlet opening 28. The transverse propulsion device 1 comprises door movement means configured to move said at least one door 13 between a limit opening position and a limit closing position, respectively, in which the at least one door 13 allows the flow of a predefined maximum water flow rate and a predefined minimum water flow rate through the

tunnel inlet opening 28. In the limit closing position, the at least one door 13 at least partially occludes the first half area 281 and leaves the second half area 282 at least partially open, at least partially allowing the passage of water through the second half area 282. The transverse propulsion device comprises a grid 4 positioned near or at the tunnel inlet opening 28, comprising a plurality of uprights 41 arranged on an upright surface 45, and a plurality of crosspieces 42 oriented incident to the uprights 41. The grid 4 and the door 13 are directly adjacent along the tunnel axis X, i.e., adjacent minus a constructive dimensional tolerance. Preferably, the upright surface 45 of the grid 4 is substantially coplanar or adjacent along the tunnel axis X with respect to the door plane Q of the door 13.

[00191] According to a further general embodiment of the invention, a transverse propulsion device 1 comprises a transverse maneuvering tunnel 25 comprising tunnel walls 27, a tunnel axis X oriented incidentally to the outer hull surface 210 of the ship, and opening edges 26 extending at least partially around the tunnel axis X, where, along the flow direction S, the opening edges 26 are divided into a first edge portion 261 intended to be lapped first by the external water flow 200, and a second edge portion 262 complementary to the first edge portion

261, where the opening edges 26 delimit a tunnel inlet opening 28 open on the outer hull surface 210 and divided into a first half area 281 partially delimited by the first edge portion 261, and a second half area 282 complementary to the first half area 281 and partially delimited by the second edge portion 262. The transverse propulsion device 1 comprises at least one door 13 extending mainly with respect to a door plane Q and associated with the tunnel inlet opening 28. The transverse propulsion device 1 comprises door movement means configured to move said at least one door 13 between a limit opening position and a limit closing position, respectively, in which the at least one door 13 allows the flow of a predefined maximum water flow rate and a predefined minimum water flow rate through the tunnel inlet opening 28. In the limit closing position, the at least one door 13 at least partially occludes the first half area 281 and leaves the second half area 282 at least partially open, at least partially allowing the passage of water through the second half area 282. The door 13 comprises a plurality of slits 133 having a slotted shape, each slit 133 having a first major slit dimension along an extension direction E-E and a second minor slit dimension in a direction transverse to said extension direction E-E. The transverse propulsion device

comprises a grid 4 fixed to the tunnel walls 27 and/or to the opening edges 26 near or at the tunnel inlet opening 28, comprising a plurality of uprights 41 and a plurality of crosspieces 42 oriented incident to the uprights 41. At least some uprights 41 and at least some crosspieces 42 intersect and together delimit a plurality of functional through windows 40, each functional through window 40 having a first side extending along the extension direction E-E of the slits 133, and a second side, where the first side is greater with respect to the second side, e.g., each functional through window 40 has an elongated or substantially rectangular shape. In an embodiment, the main extension of said rectangular functional through window 40 is parallel to said main extension direction E-E of said slit 133.

[00192] These above-mentioned general embodiments are intended to be combinable with one or more of the particular, previously described embodiments, creating special embodiments.

LIST OF REFERENCE NUMBERS

1 Transverse propulsion device

2 Ship

21 hull

200 external water flow

210 outer hull surface

25 transverse maneuvering tunnel

26 opening edges

261 first edge portion

262 second edge portion

27 tunnel walls

275 fixing ledges

28 tunnel inlet opening

281 first half area

282 second half area

3 -

4 grid (first grid)

40 functional through window

41 uprights

42 crosspieces

49 second grid

5 -

6 -

71 hinge member

8 support frame

85 frame fixing elements

9 maneuvering propeller

10 -

11 -

12 -

13 door

130 peripheral door edge

133 slit

138 inner face

139 outer face

A inlet area

D upright distance

F free half area

H hinge axis

O occluded half area

P inlet plane

Q door plane

S flow direction

X tunnel axis

E-E extension direction

CLAIMS

1. A ship transverse propulsion device (1), wherein the ship (2) comprises a hull (21) which comprises an outer hull surface (210), along which an external water flow (200) is intended to flow locally along a flow direction (S); wherein the ship transverse propulsion device comprises:

- a transverse maneuvering tunnel (25) comprising tunnel walls (27), a tunnel axis (X) oriented incidentally to the outer hull surface (210), and opening edges (26) extending at least partially about the tunnel axis (X), wherein, along the flow direction (S), the opening edges (26) are divided into a first edge portion (261) intended to be lapped first by the external water flow (200), and a second edge portion (262) complementary to the first edge portion (261), wherein the opening edges (26) delimit a tunnel inlet opening (28) open on the outer hull surface (210), wherein the tunnel inlet opening (28) is divided into a first half area (281) partially delimited by the first edge portion (261), and a second half area (282) complementary to the first half area (281) and partially delimited by the second edge portion (262);
- at least one door (13) associated with the tunnel inlet opening (28);
- door movement means configured to move said at least

one door (13) between a limit opening position and a limit closing position, in which the at least one door (13) allows the flow of a predefined maximum water flow and a predefined minimum water flow through the tunnel inlet opening (28), respectively;

wherein, in the limit closing position, the at least one door (13) at least partially occludes the first half area (281) and leaves the second half area (282) at least partially open, at least partially allowing the passage of water through the second half area (282).

2. A ship transverse propulsion device according to claim 1, wherein the transverse maneuvering tunnel (25) comprises an inlet plane (P) incident to the tunnel axis (X), wherein the tunnel inlet opening (28) has an inlet area (A) on the inlet plane (P), wherein, in the limit closing position, the at least one door (13) divides the inlet area (A) into a free half area (F), through which the passage of the predefined minimum water flow is allowed, and an occluded half area (O), through which the passage of the water is prevented, wherein the occluded half area (O) is between 15% and 60%, preferably between 25% and 50%, of the inlet area (A); and/or wherein the transverse propulsion device comprises at least one maneuvering propeller (9) accommodated in the transverse maneuvering tunnel (25), configured to move water through the tunnel inlet opening (28).

3. A ship transverse propulsion device according to claim 1 or claim 2, configured so that, in the limit closing position, the at least one door (13) cooperates with the outer hull surface (210) to form, as a whole, a surface with a hydrodynamic shape along which the external water flow (200) flows.

4. A ship transverse propulsion device according to claim 3, wherein the at least one door (13) comprises a peripheral door edge (130) at least partially having a shape substantially complementary to the first edge portion (261) or a segment of said first edge portion (261), wherein, in the limit closing position, the peripheral door edge (130) is adjacent to and/or at least partially in contact with said at least one segment or the entire complementary first edge portion (261).

5. A ship transverse propulsion device according to any one of the preceding claims, comprising a single door (13).

6. A ship transverse propulsion device according to any one of the preceding claims, wherein the door movement means comprise at least one hinge member (71) supported on the outside of the transverse maneuvering tunnel (25) and operatively pivotally connected to at least one door (13).

7. A ship transverse propulsion device according to any one of claims 1 to 5, comprising a support frame (8)

supported by the tunnel walls (27) and/or the hull (21), at least partially accommodated inside or projecting into the transverse maneuvering tunnel (25);

wherein the door movement means comprise at least one hinge member (71) supported by the support frame (8) and operatively pivotally connected to the at least one door (13).

8. A ship transverse propulsion device according to claim 7, wherein the support frame (8) is engaged with the tunnel walls (27) in a removable manner.

9. A ship transverse propulsion device according to claim 8, wherein the tunnel walls (27) comprise a plurality of fixing ledges (275) protruding into the transverse maneuvering tunnel (25), wherein the support frame (8) comprises removable frame fixing elements (85), for example bolted screws, configured to engage the fixing ledges (275).

10. A ship transverse propulsion device according to any one of claims 7 to 9, wherein the at least one door (13) is hinged to the support frame (8) in a hinge axis (H) oriented substantially orthogonal to the flow direction (S).

11. A ship transverse propulsion device according to any one of claims 6 to 10, wherein the at least one hinge member (71) comprises a rotary actuator configured to rotate the at least one door (13) between the opening

position and the closing position.

12. A ship transverse propulsion device according to any one of the preceding claims, wherein the door movement means are configured to move the at least one door (13) between the opening position and the closing position in a direction substantially opposite to the flow direction (S).

13. A ship transverse propulsion device according to any one of the preceding claims, wherein the door movement means are configured to move the at least one door (13) along an allowable door travel that ends when the limit closing position is reached.

14. A ship transverse propulsion device according to any one of the preceding claims, wherein the at least one door (13) comprises an inner face (138), an opposite outer face (139), and at least one through slit (133) between the inner face (138) and the outer face (139), wherein, in the closing position, the inner face (138) faces the transverse maneuvering tunnel (25) and the at least one slit (133) can be crossed by water.

15. A ship transverse propulsion device according to claim 14, wherein, with the at least one door (13) in the limit closing position and the external water flow (200) flowing along the flow direction (S) at high speeds, preferably speeds exceeding 4 meters per second, the at least one slit (133) is configured to limit or prevent

the external water flow (200) from crossing the at least one slit (133).

16. A ship transverse propulsion device according to claim 15, wherein the at least one slit (133) is substantially slot-shaped, having a main extension in a direction substantially orthogonal to the flow direction (S), with the at least one door (13) in the closing position.

17. A ship transverse propulsion device according to any one of the preceding claims, comprising a grid (4) which comprises a plurality of uprights (41) substantially parallel to one another and oriented substantially orthogonal to the flow direction (S), and a plurality of crosspieces (42) oriented incidentally to the uprights (41); wherein all or only some uprights (41) and all or only some crosspieces (42) delimit a plurality of functional through windows (40) therebetween, wherein, with the at least one door (13) in the limit closing position and the external water flow (200) flowing along the flow direction (S) at high speeds, preferably speeds exceeding 4 meters per second, the grid (4) is configured to prevent or limit the passage of the external water flow (200) through said functional through windows (40).

18. A ship transverse propulsion device according to claim 17, wherein an upright distance (D) along the flow direction (S) between two consecutive uprights (41),

which delimit a functional through window (40) therebetween, is between 150 and 250 millimeters, preferably between 180 and 220 millimeters.

19. A ship transverse propulsion device according to claim 17 or claim 18, wherein, with the at least one door (13) in the limit closing position and with the external water flow (200) flowing along the flow direction (S) at high speeds, preferably speeds exceeding 4 meters per second, the functional through windows (40) are configured to cooperate with one another and create a hydrodynamic surface with low friction which promotes the external water flow (200) along the flow direction (S).

20. A ship transverse propulsion device according to any one of claims 17 to 19, wherein the functional through windows (40) are configured to retain water at low speeds, preferably speeds below 2.5 meters per second, at said functional through windows (40) and/or inside the transverse maneuvering tunnel (25) proximally to said functional through windows (40).

21. A ship transverse propulsion device according to any one of claims 17 to 20, wherein the transverse maneuvering tunnel (25) comprises an inlet plane (P) incident to the tunnel axis (X), wherein the tunnel inlet opening (28) has an inlet area (A) on the inlet plane (P), wherein the grid (4) comprises an upright surface (45) along which the uprights (41) are arranged, wherein

each functional through window (40) has a functional area (Af) on the upright surface (45), wherein the functional ratio (Af/A) between the functional area (Af) and the inlet area (A) is between 0.05% and 3%, preferably between 1% and 2.5%, for example of about 1.7%.

22. A ship transverse propulsion device according to any one of the preceding claims, wherein the opening edges (26) are connected to the tunnel walls (27) with a connection radius between 100 and 500 mm, preferably between 200 and 400 mm.

23. A ship transverse propulsion device according to any one of the preceding claims, wherein, with the transverse maneuvering tunnel (25) at least partially filled with water, the at least one door (13) in the limit closing position, and the external water flow (200) flowing along the flow direction (S) at high speeds, preferably speeds exceeding 4 meters per second, the transverse propulsion device is configured to keep the water inside the transverse maneuvering tunnel (25) at low speeds along the tunnel axis (X), preferably speeds below 2.5 meters per second.

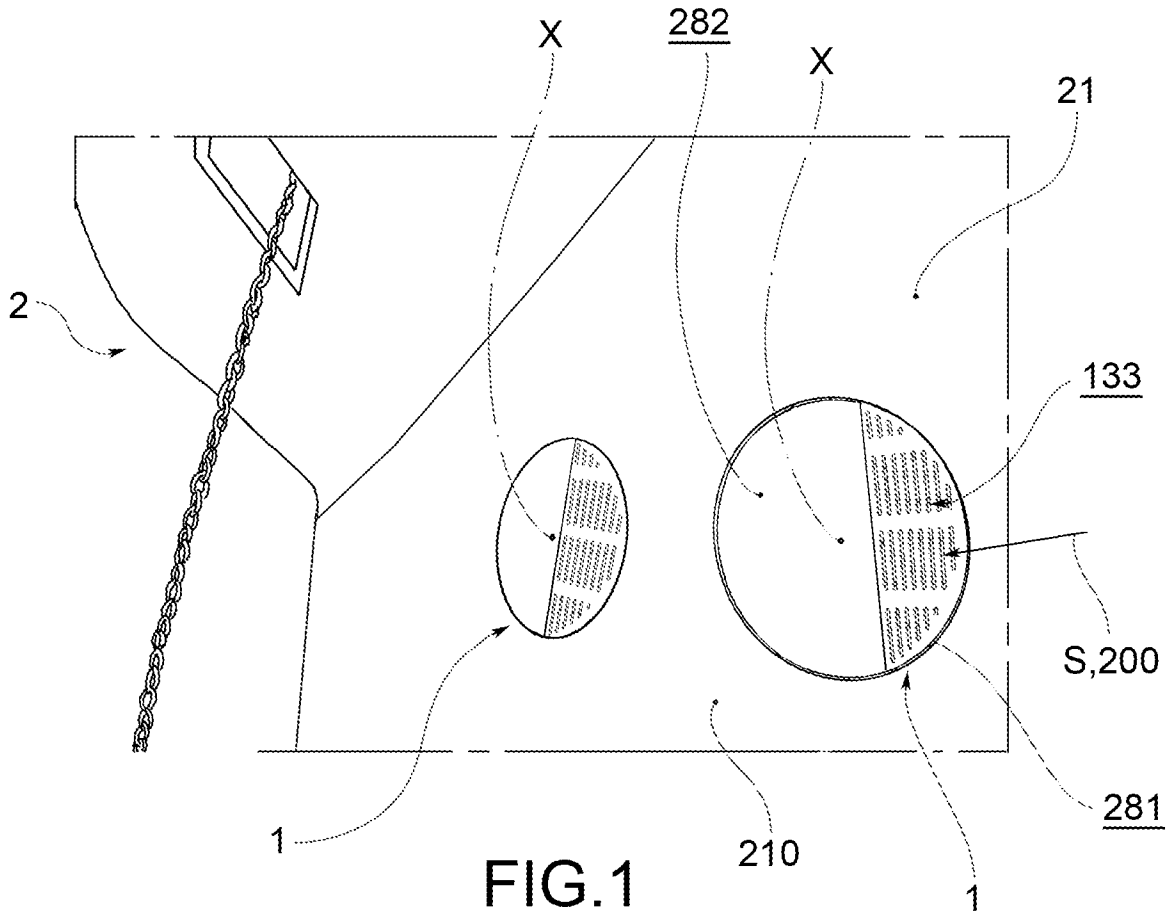

FIG.1

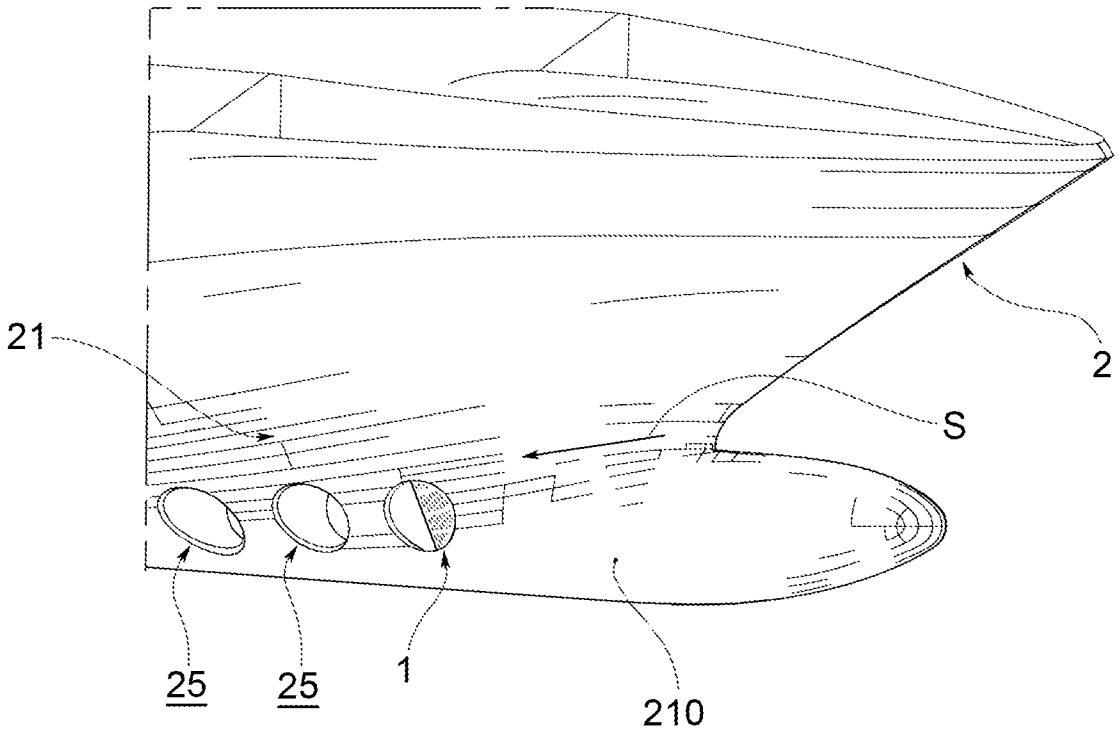

FIG.2

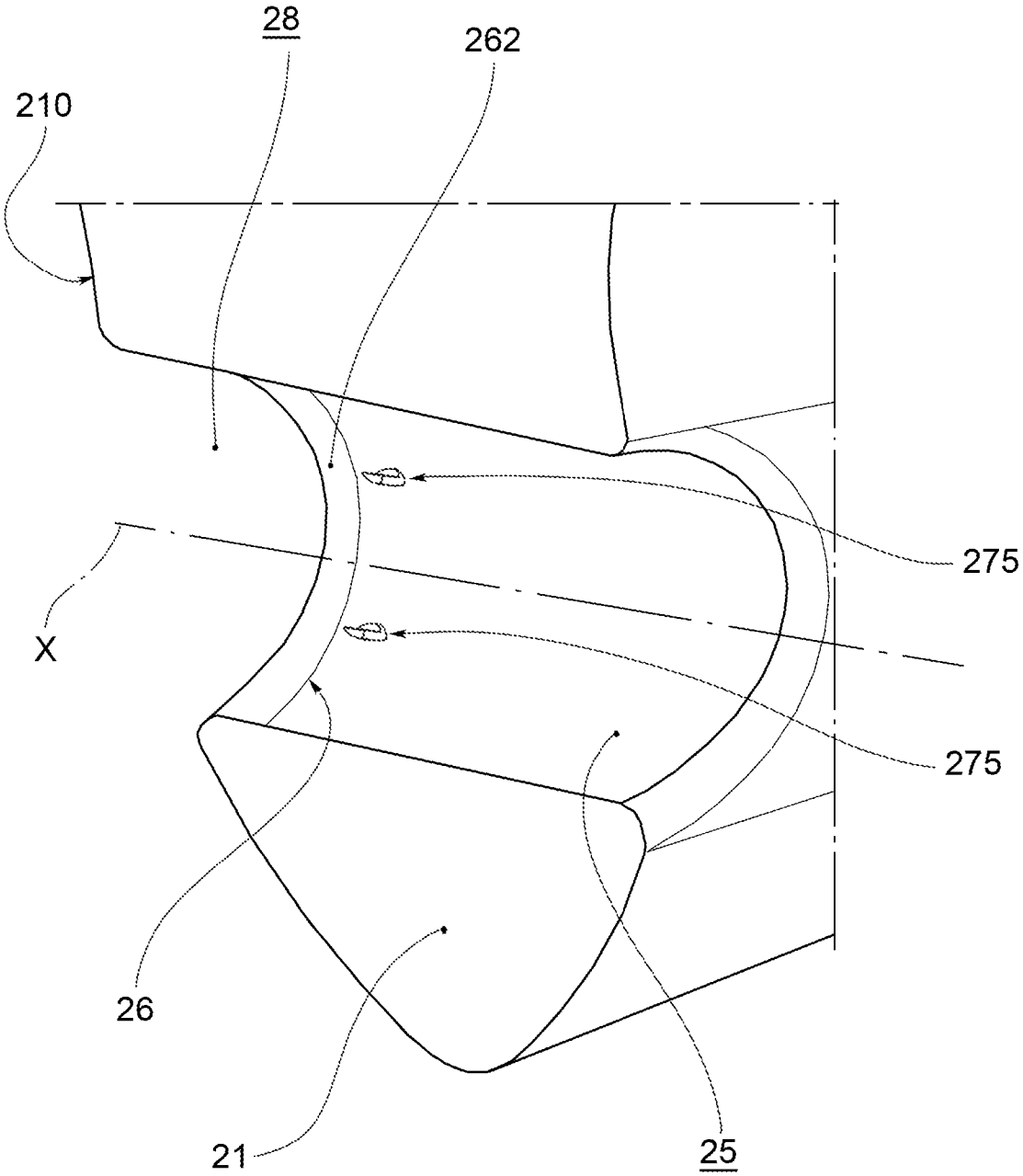

FIG.3

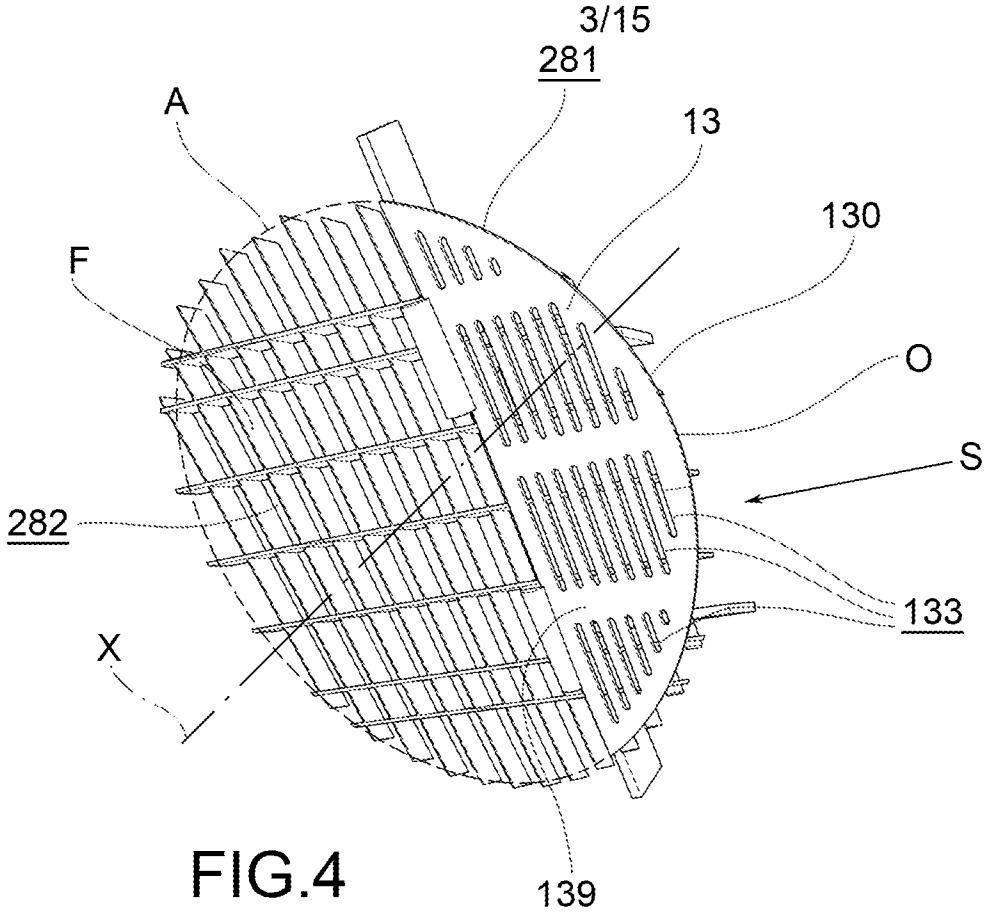

FIG.4

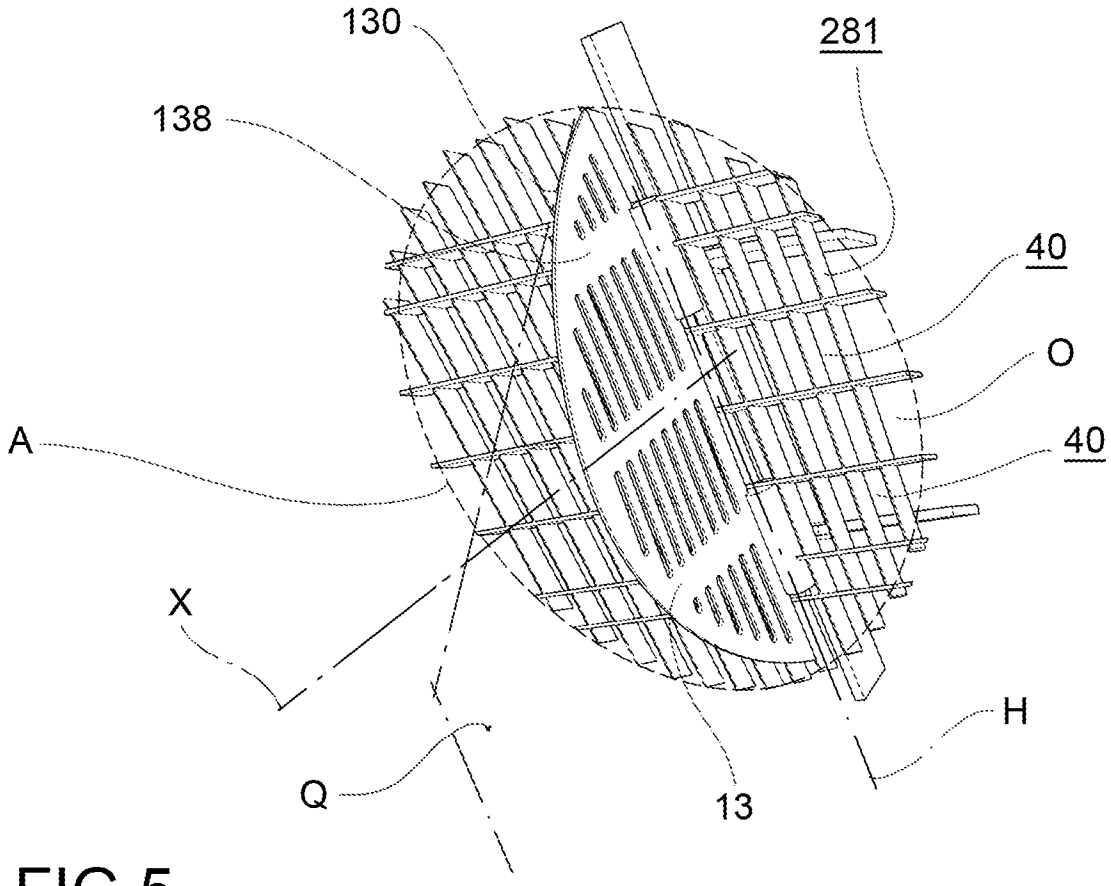

FIG.5

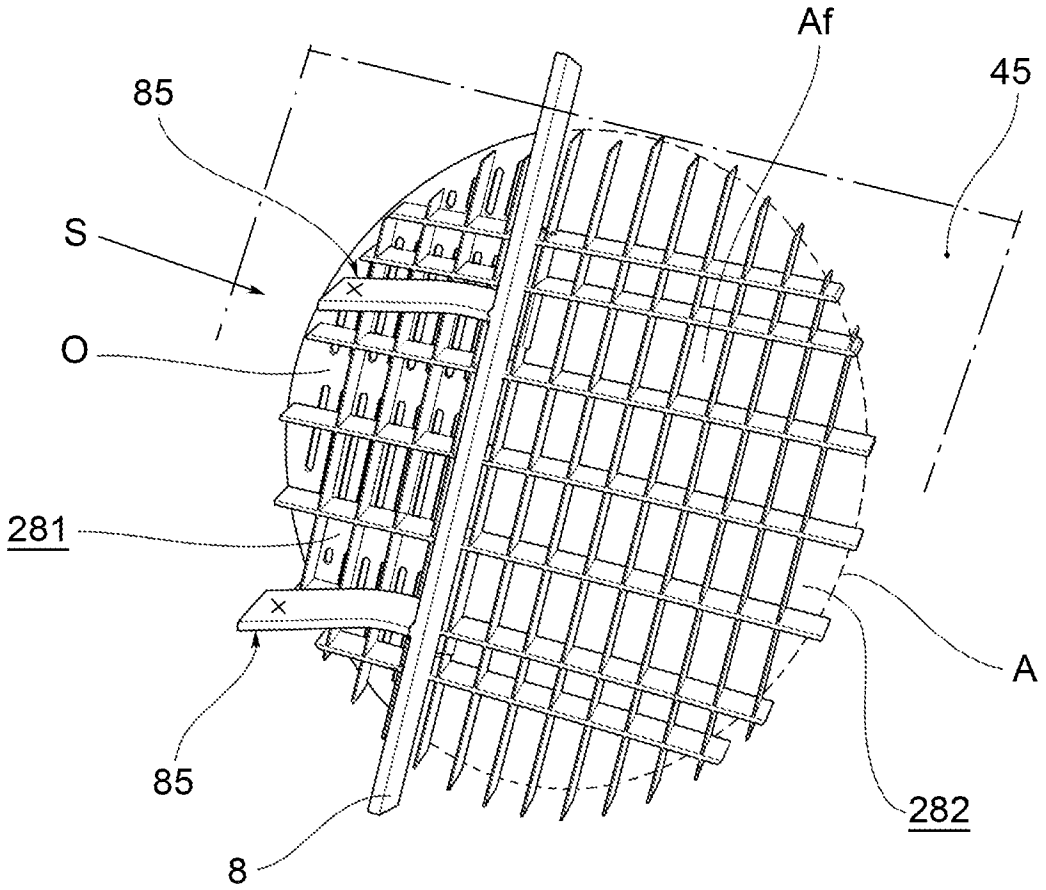

FIG.6

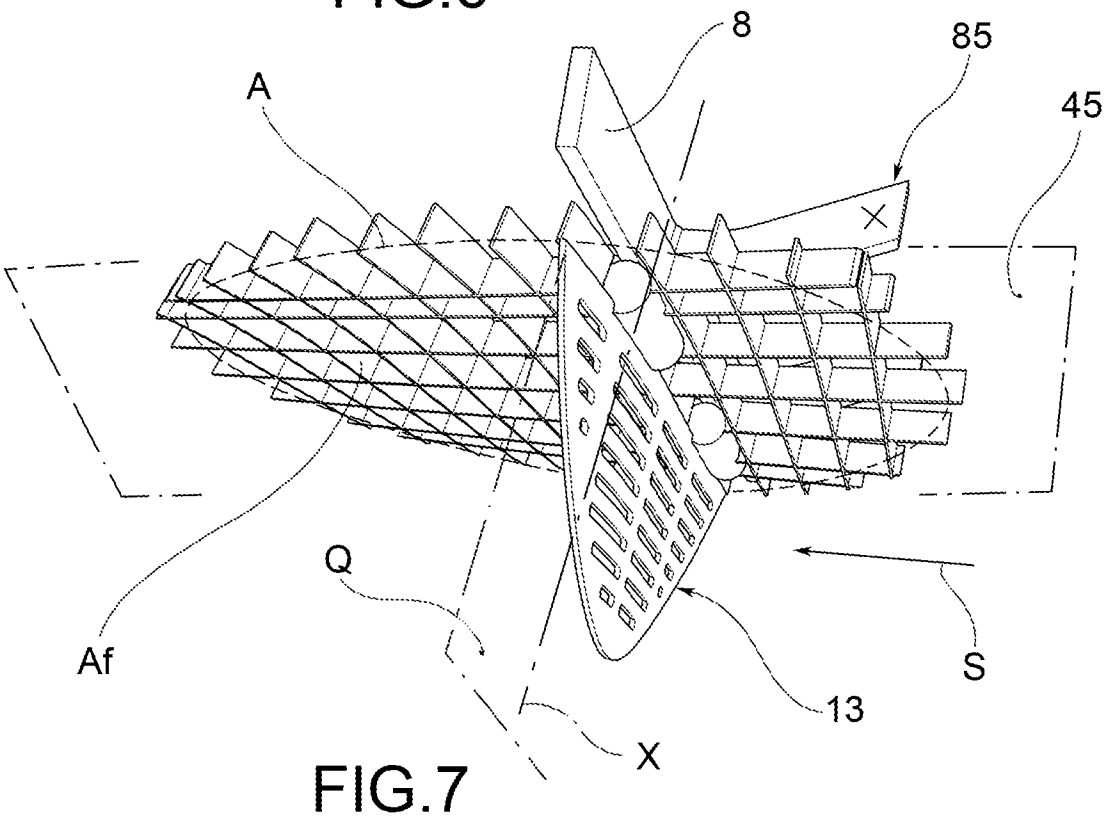

FIG.7

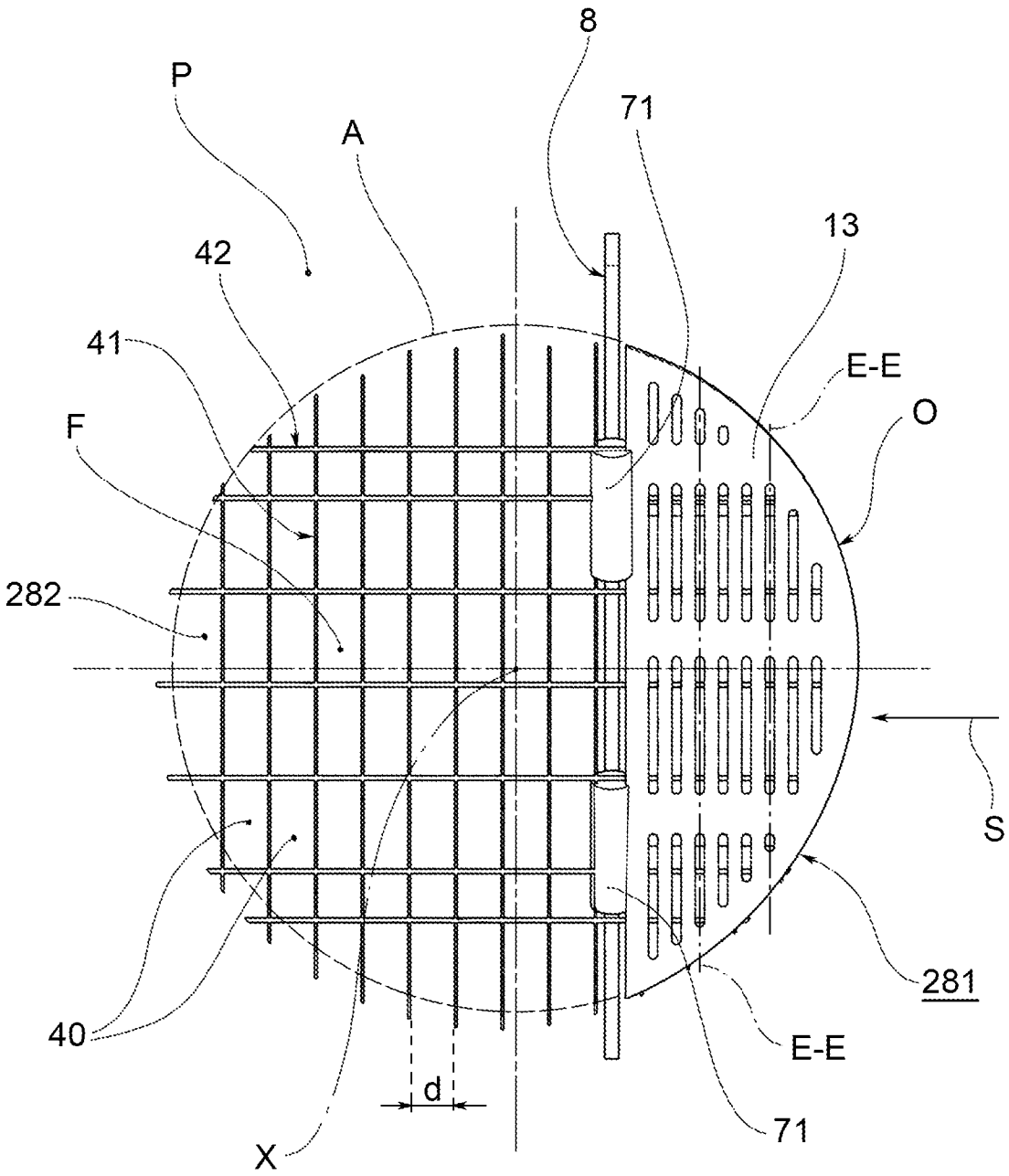

FIG.8

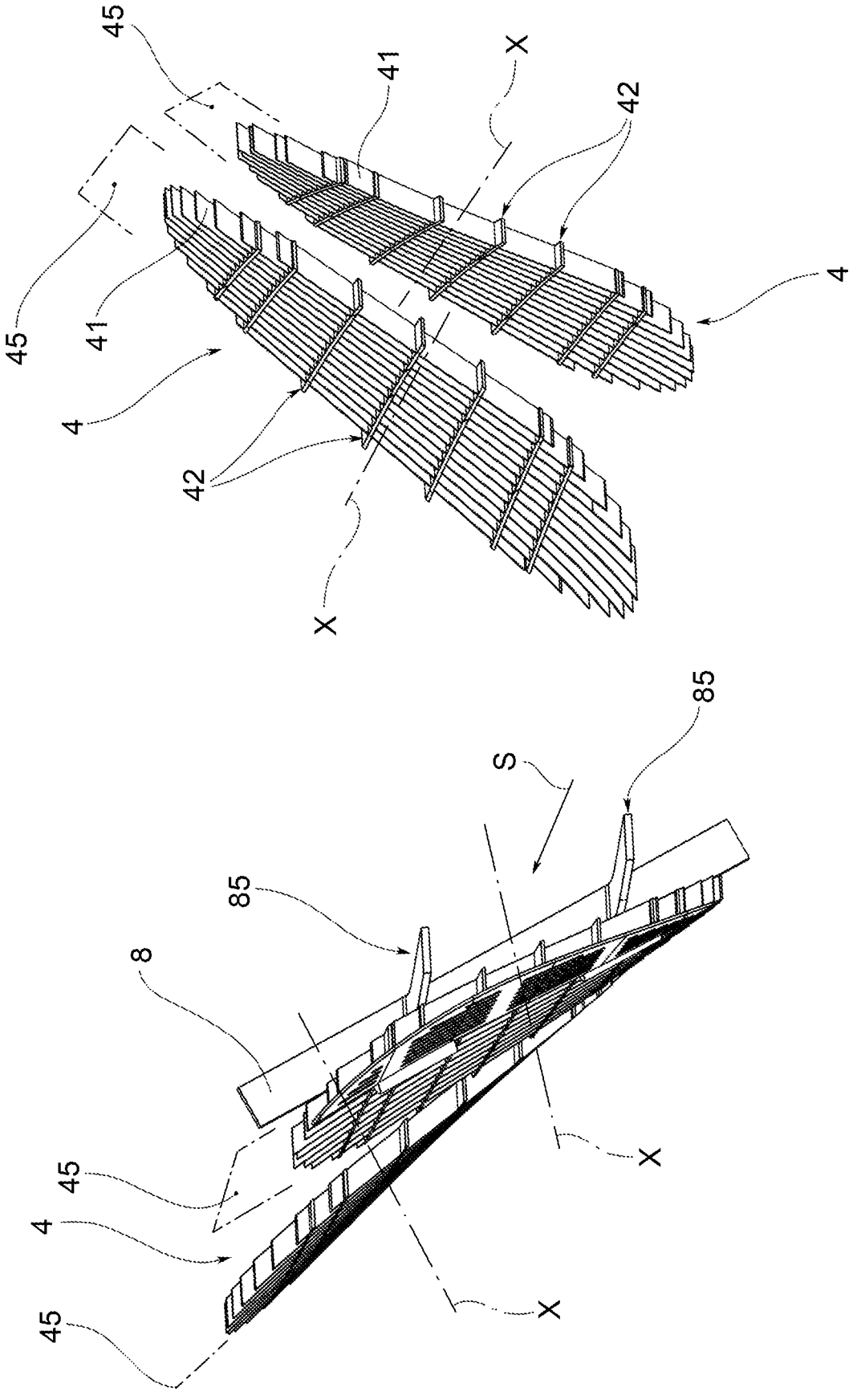

FIG.9

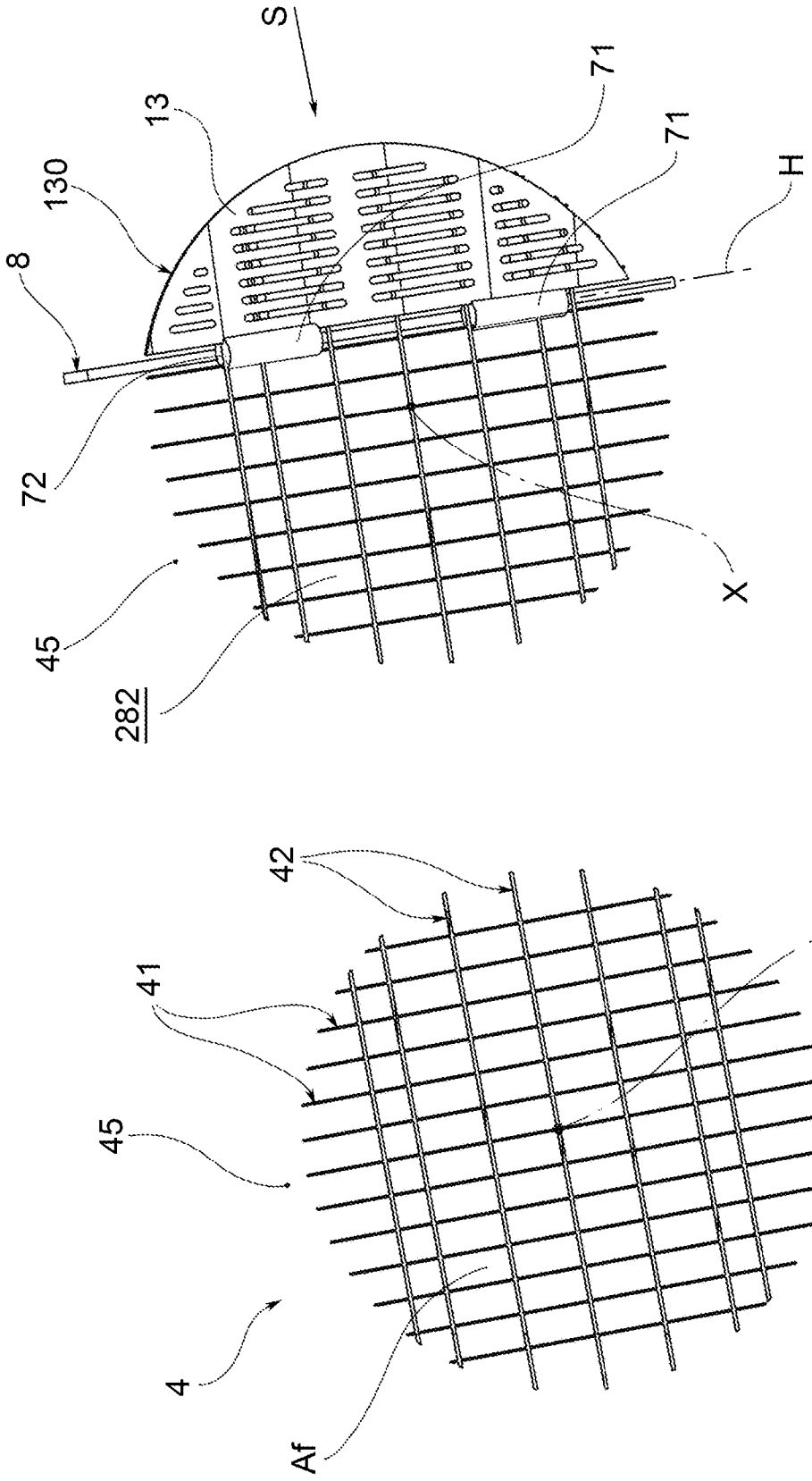

FIG.10

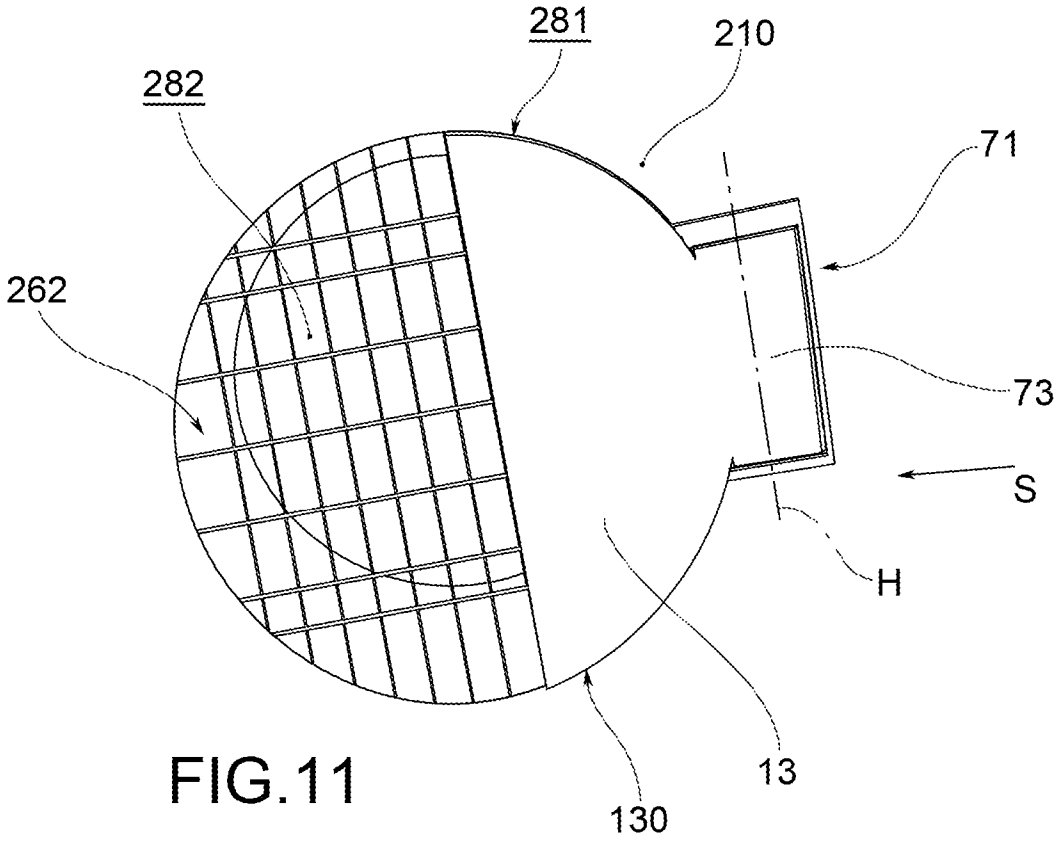

FIG.11

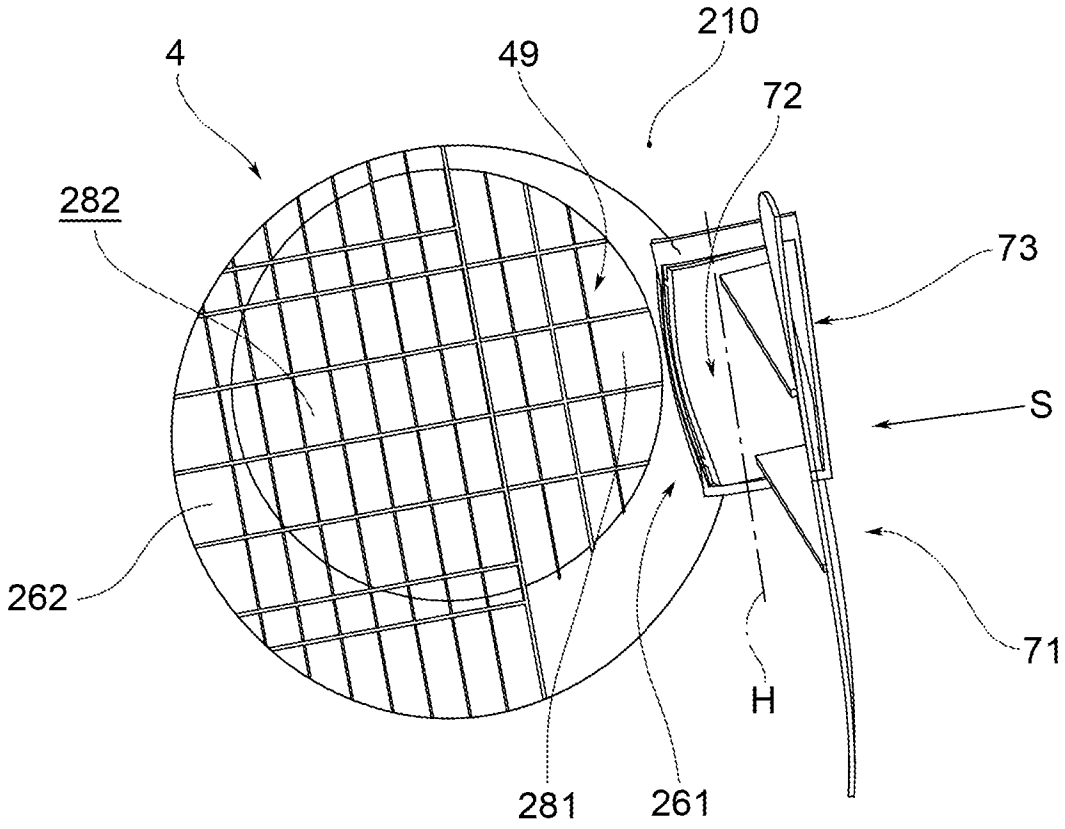

FIG.12

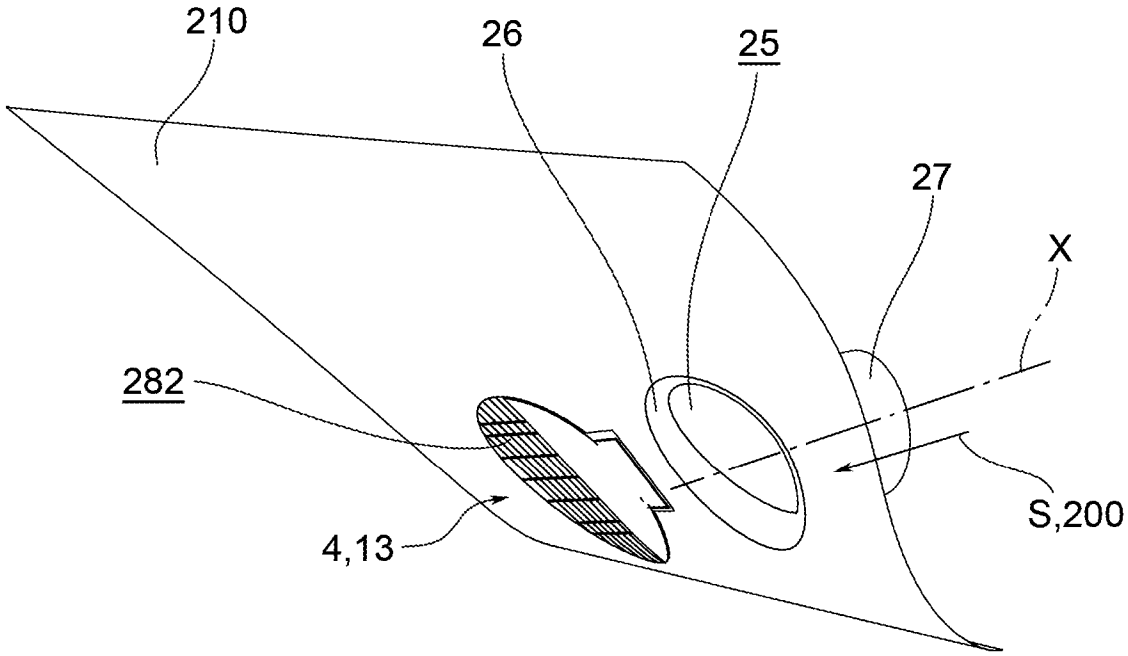

FIG.13

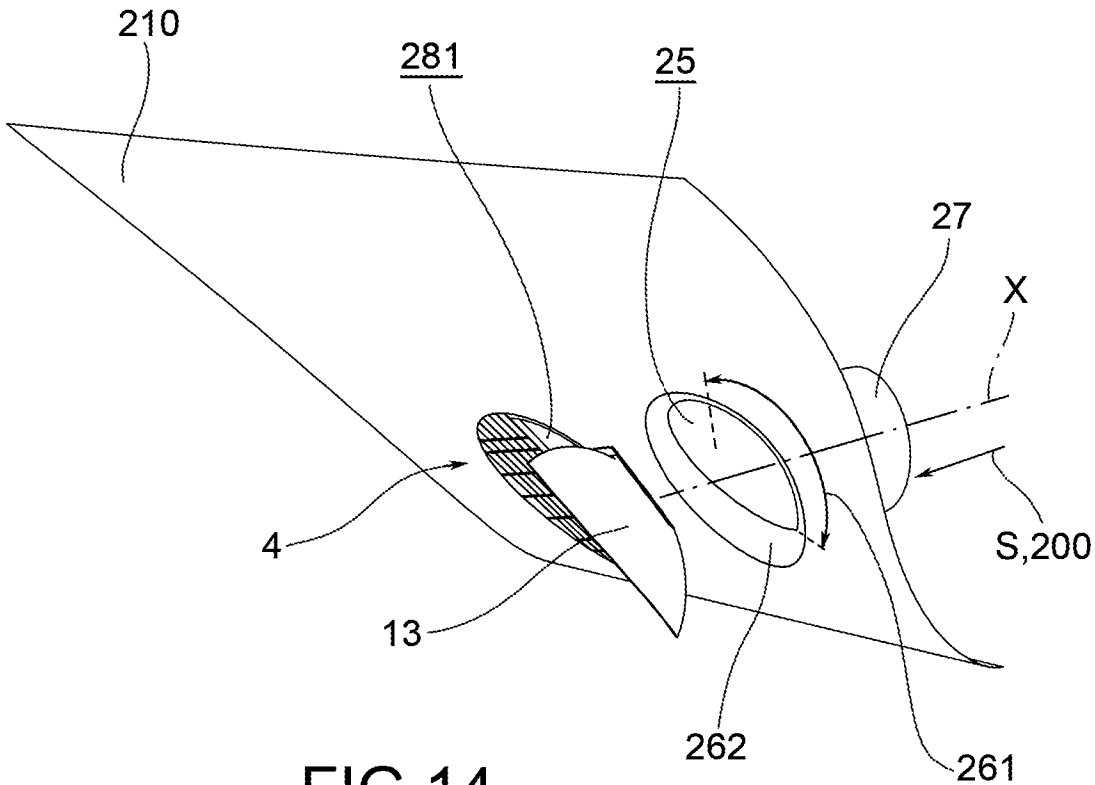

FIG.14

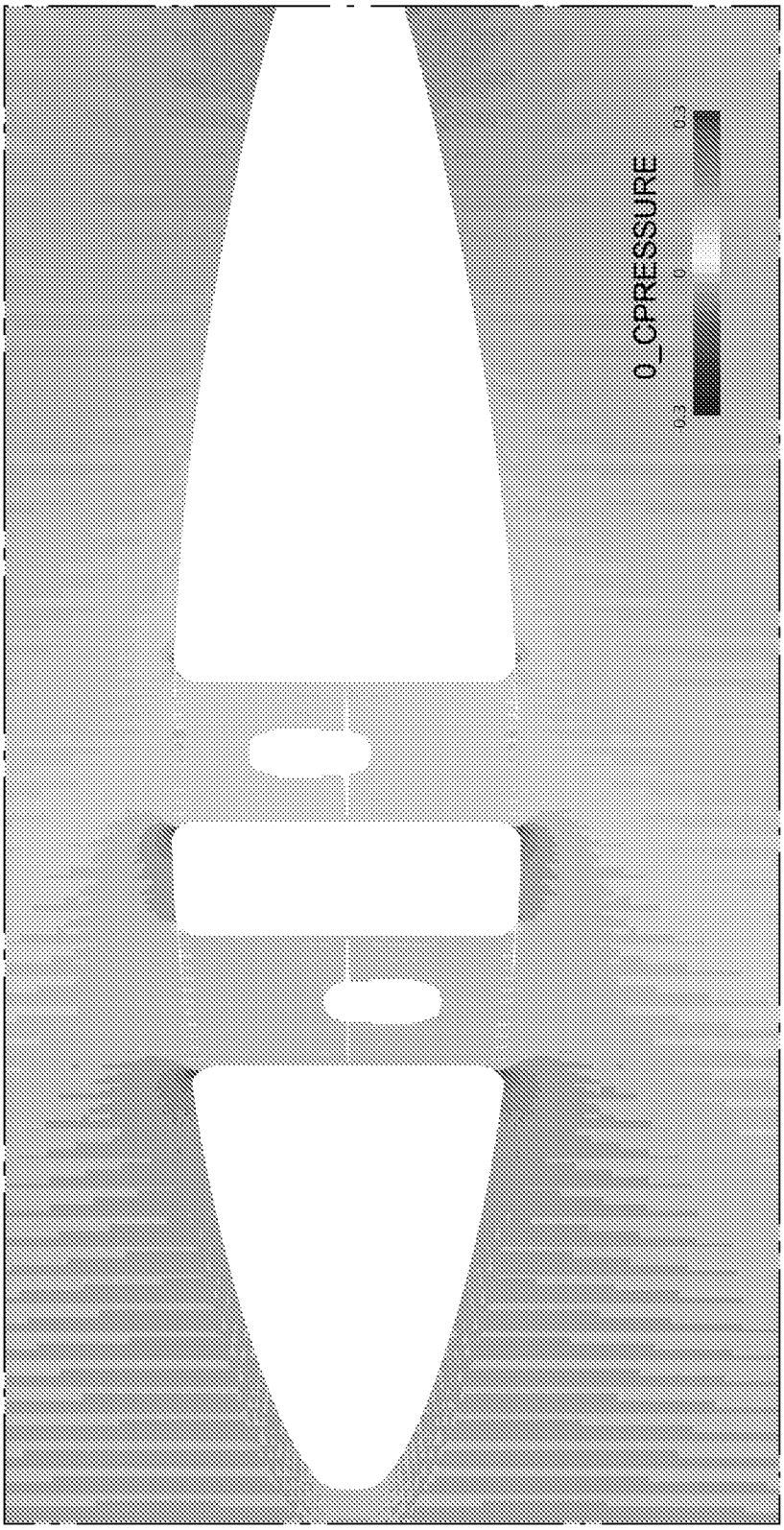

FIG.15

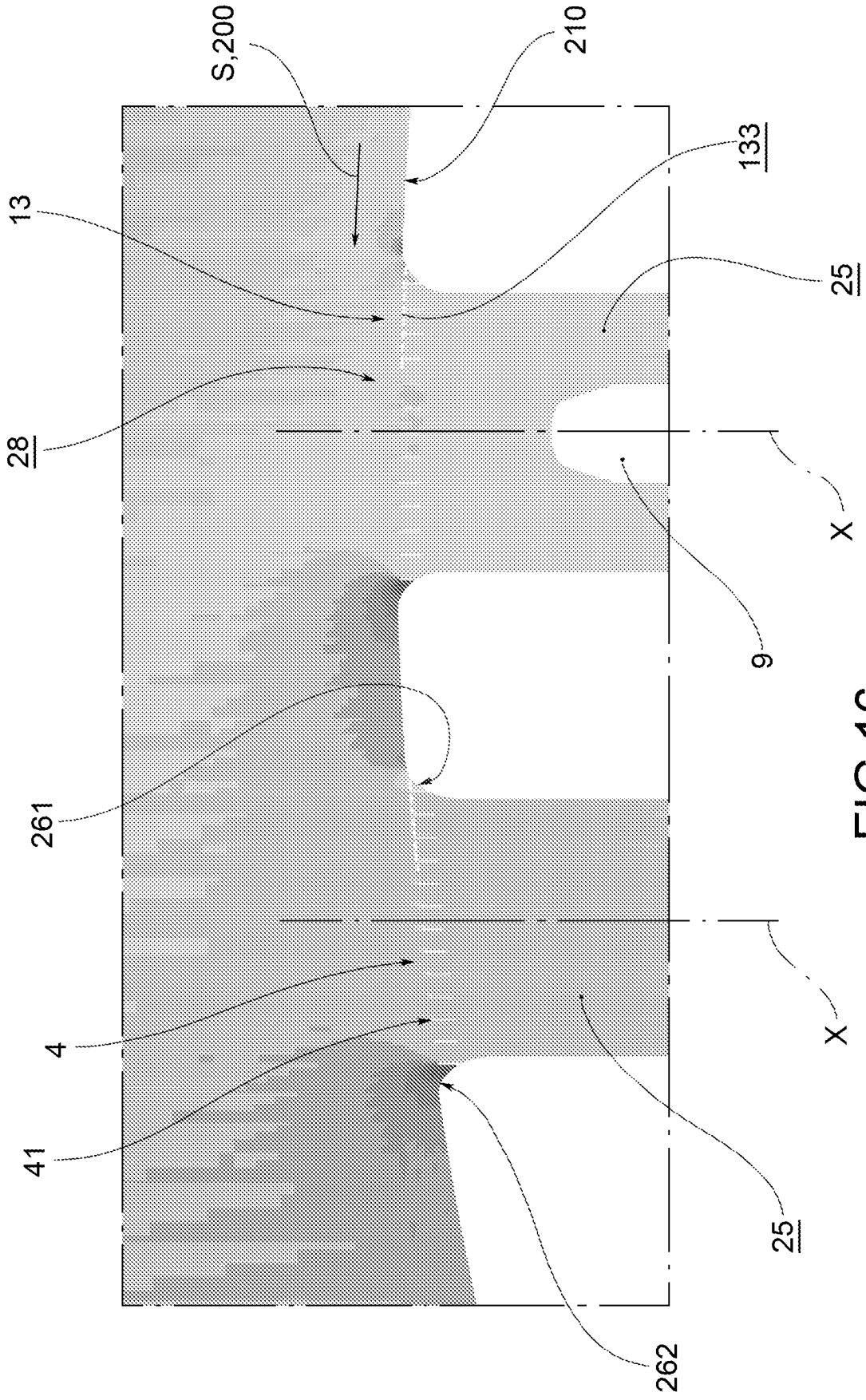

FIG.16

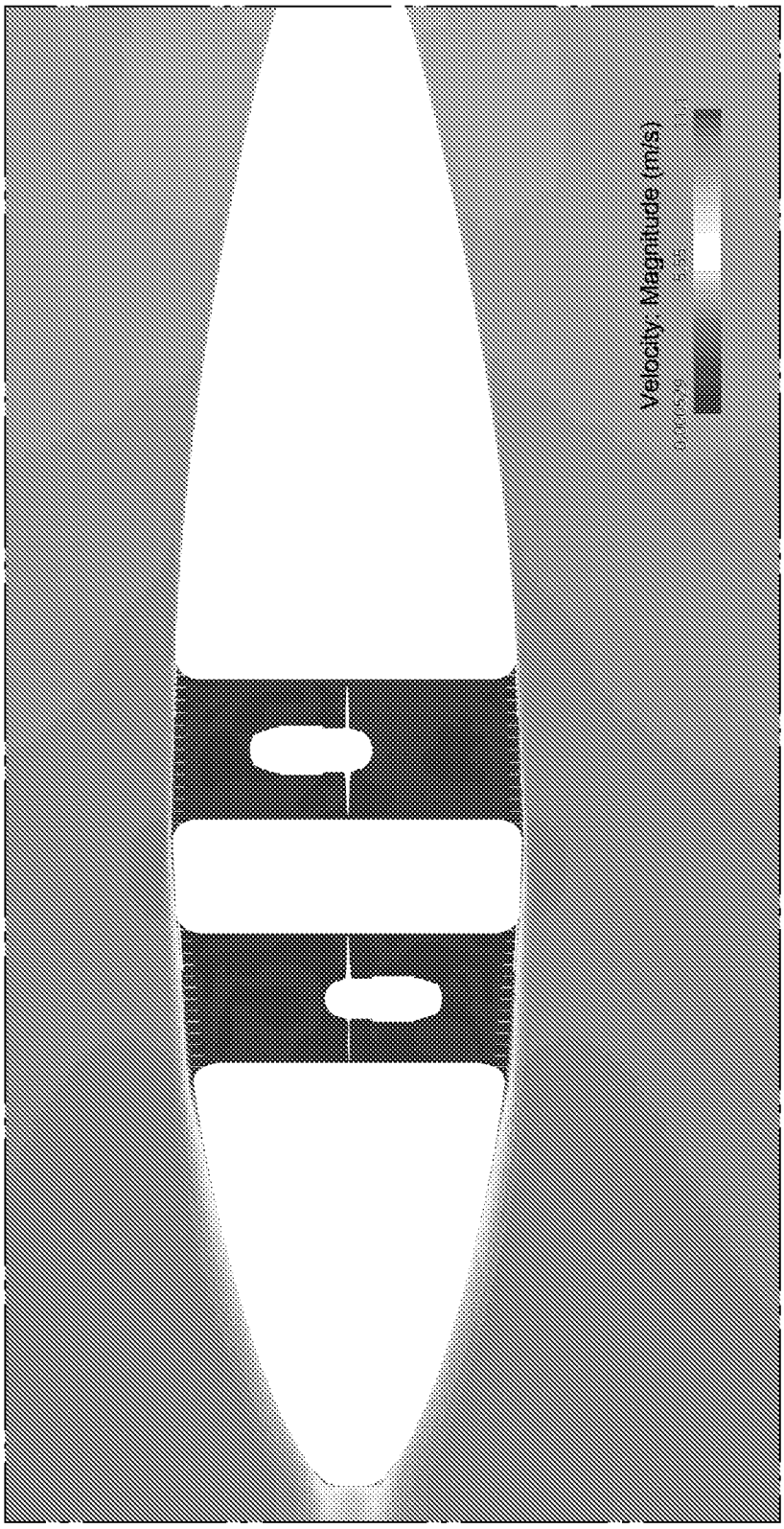

FIG.17

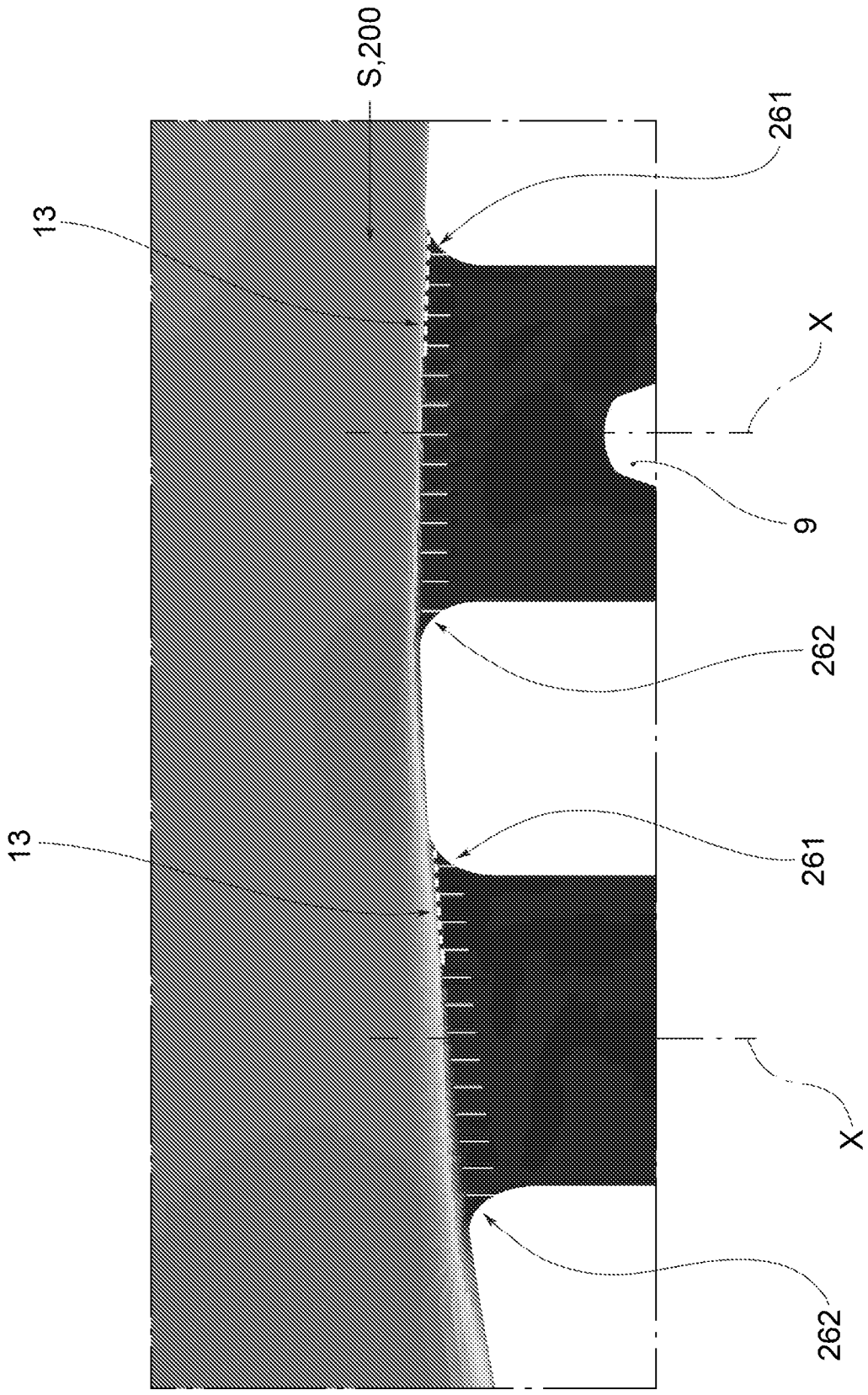

FIG.18

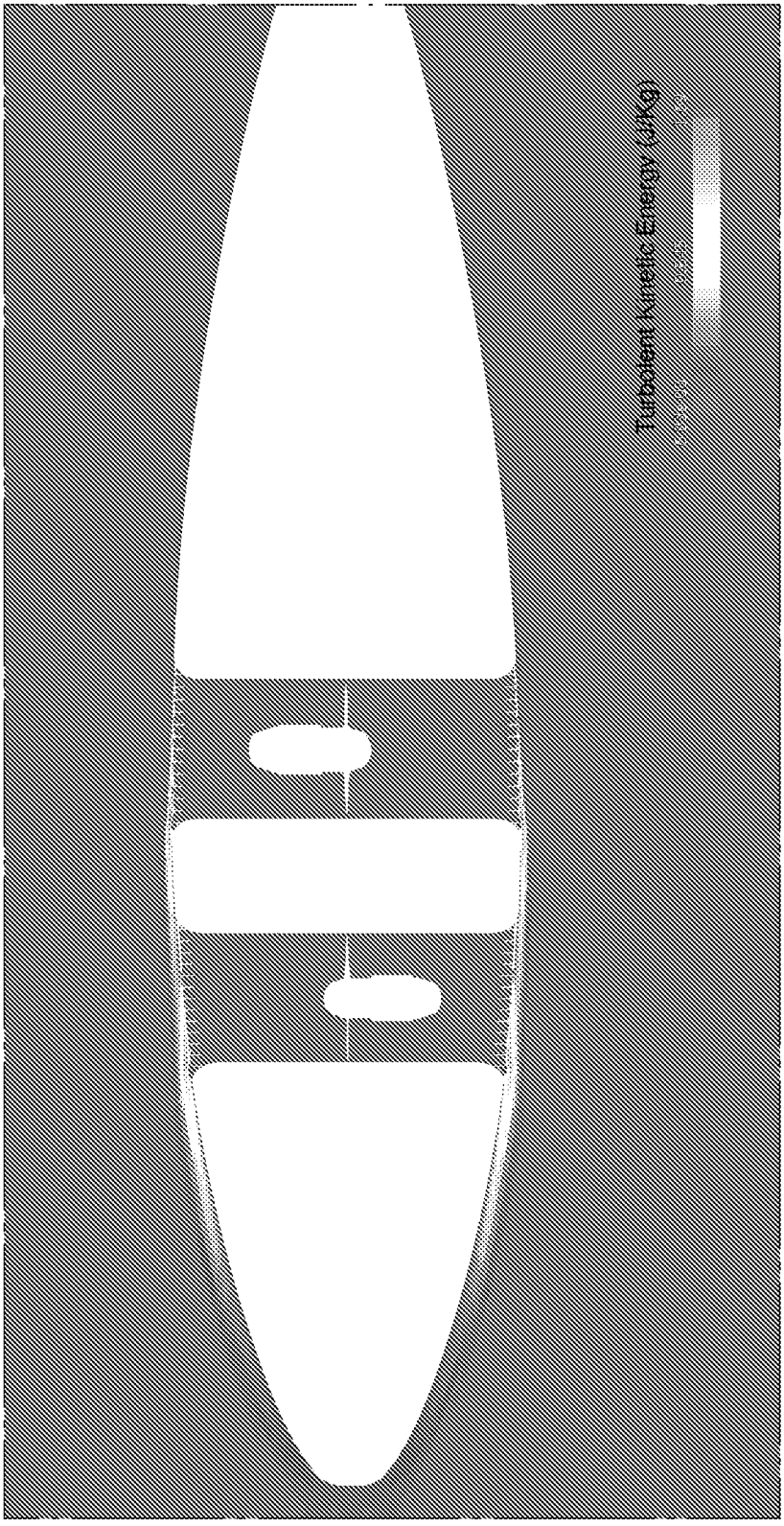

FIG.19

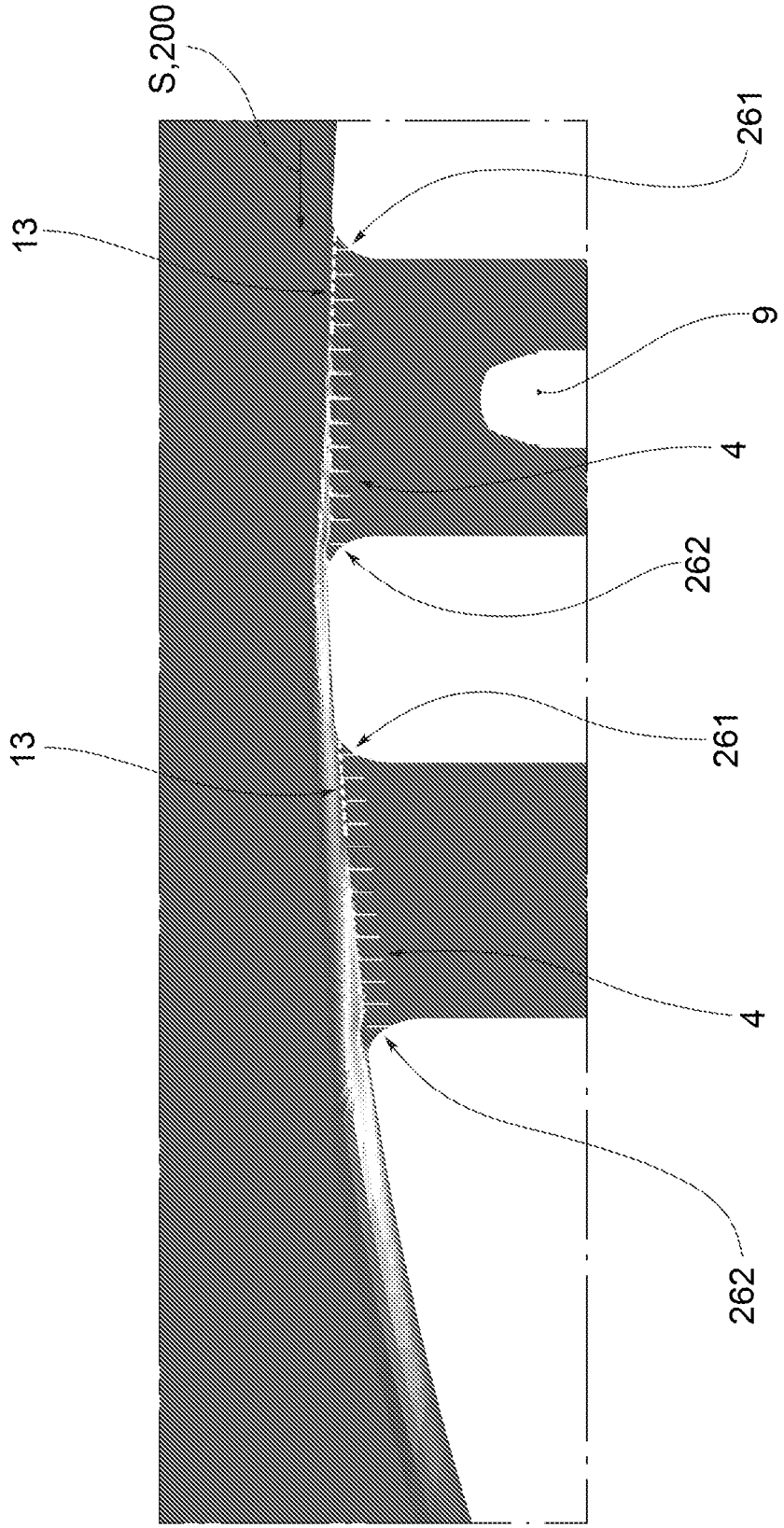

FIG.20

INTERNATIONAL SEARCH REPORT

International application No
PCT/IB2024/055541

A. CLASSIFICATION OF SUBJECT MATTER

INV. B63B3/66 B63H5/14 B63H5/16 B63H25/46 B63B1/36
B63B13/02 B63H11/01

ADD.

According to International Patent Classification (IPC) or to both national classification and IPC

B. FIELDS SEARCHED

Minimum documentation searched (classification system followed by classification symbols)

B63B B63H

Documentation searched other than minimum documentation to the extent that such documents are included in the fields searched

Electronic data base consulted during the international search (name of data base and, where practicable, search terms used)

EPO-Internal

C. DOCUMENTS CONSIDERED TO BE RELEVANT

Category*	Citation of document, with indication, where appropriate, of the relevant passages	Relevant to claim No.
X	JP 2015 147532 A (MITSUBISHI HEAVY IND LTD) 20 August 2015 (2015-08-20) cited in the application	1-5,13, 22,23
Y	figures 1-7,9-12	6-12, 14-21

X	KR 101 292 883 B1 (HYUN DAI HEAVY IND CO LTD [KR]) 2 August 2013 (2013-08-02) cited in the application	1-6,13, 17-23
Y	figures 4-9	7-12, 14-21

X	WO 2022/079655 A1 (FINCANTIERI SPA [IT]) 21 April 2022 (2022-04-21) cited in the application	1-13, 17-23
Y	figures 1-24	14-16

	-/--	

[X] Further documents are listed in the continuation of Box C.

[X] See patent family annex.

* Special categories of cited documents :

"A" document defining the general state of the art which is not considered to be of particular relevance

"E" earlier application or patent but published on or after the international filing date

"L" document which may throw doubts on priority claim(s) or which is cited to establish the publication date of another citation or other special reason (as specified)

"O" document referring to an oral disclosure, use, exhibition or other means

"P" document published prior to the international filing date but later than the priority date claimed

"T" later document published after the international filing date or priority date and not in conflict with the application but cited to understand the principle or theory underlying the invention

"X" document of particular relevance;; the claimed invention cannot be considered novel or cannot be considered to involve an inventive step when the document is taken alone

"Y" document of particular relevance;; the claimed invention cannot be considered to involve an inventive step when the document is combined with one or more other such documents, such combination being obvious to a person skilled in the art

"&" document member of the same patent family

Date of the actual completion of the international search	Date of mailing of the international search report
13 August 2024	27/08/2024

Name and mailing address of the ISA/	Authorized officer
European Patent Office, P.B. 5818 Patentlaan 2 NL - 2280 HV Rijswijk Tel. (+31-70) 340-2040, Fax: (+31-70) 340-3016	Freire Gomez, Jon

2

Form PCT/ISA/210 (second sheet) (April 2005)

C(Continuation). DOCUMENTS CONSIDERED TO BE RELEVANT

Category*	Citation of document, with indication, where appropriate, of the relevant passages	Relevant to claim No.
Y	US 3 408 974 A (ANDERS PEHRSSON LENNART) 5 November 1968 (1968-11-05) cited in the application figures 11-13	6-12
Y	CN 111 516 842 B (SHANGHAI FUSION IND CO LTD) 16 August 2022 (2022-08-16) cited in the application figures 1-10	17-21
Y	CN 111 498 073 A (CSSC HUANGPU WENCHONG SHIPBUILDING CO LTD) 7 August 2020 (2020-08-07) cited in the application figures 1-7	7
Y	CN 108 163 169 A (NANJING JINLING SHIPYARD CO LTD) 15 June 2018 (2018-06-15) cited in the application figures 2, 3	14-16

INTERNATIONAL SEARCH REPORT

Information on patent family members

International application No
PCT/IB2024/055541

Patent document cited in search report	Publication date	Patent family member(s)	Publication date
JP 2015147532 A	20-08-2015	JP 6234834 B2	22-11-2017
		JP 2015147532 A	20-08-2015
KR 101292883 B1	02-08-2013	NONE	
WO 2022079655 A1	21-04-2022	EP 4228963 A1	23-08-2023
		WO 2022079655 A1	21-04-2022
US 3408974 A	05-11-1968	DE 1994275 U	19-09-1968
		DK 122510 B	13-03-1972
		FI 45642 B	02-05-1972
		GB 1146915 A	26-03-1969
		JP S5120117 B1	22-06-1976
		NL 154461 B	13-08-2024
		NL 6606076 A	08-11-1966
		NO 123679 B	27-12-1971
		SE 322429 B	06-04-1970
		US 3408974 A	05-11-1968
CN 111516842 B	16-08-2022	NONE	
CN 111498073 A	07-08-2020	NONE	
CN 108163169 A	15-06-2018	NONE	