United States Patent

Hutley

[15] **3,640,521**

[45] **Feb. 8, 1972**

[54] APPARATUS FOR STACKING FAN FOLDED PAPER

[72] Inventor: **Ronald W. F. Hutley**, Lansdale, Pa.

[73] Assignee: **Advanced Terminals, Inc.**, Herkimer, N.Y.

[22] Filed: **Aug. 18, 1969**

[21] Appl. No.: **851,012**

[52] **U.S. Cl.** ..... **270/61 F**, 271/88

[51] **Int. Cl.** **B65h 45/101**, B65h 45/109

[58] **Field of Search** ..... 270/61 F, 32, 39, 79, 73, 70, 270/72, 71, 56, 52.5; 271/88, 86, 87; 29/132; 226/152–155

[56] **References Cited**

UNITED STATES PATENTS

2,016,539	10/1935	Brenn	270/61 F X
2,497,696	2/1950	Smith	29/130
2,678,474	5/1954	Butler	29/130
2,849,236	8/1958	Beaulieu	271/88
2,861,805	11/1958	Auer	271/88
3,123,269	3/1964	Morley et al.	270/61 F X
3,476,885	11/1969	Shiber et al.	226/153

Primary Examiner—Robert W. Michell
Assistant Examiner—R. P. Dyer
Attorney—Bruns and Jenney

[57] **ABSTRACT**

Apparatus for receiving a continuous web of prefolded forms from a high-speed printer and stacking them refolded on a tray has brake means and feed rollers for the web, the brake means being applied intermittently to allow the folds to refold as the forms fall to the tray. Feeler fingers continuously sense the distance from the rollers to the stack top and control the automatic lowering of the tray as the stack builds up. The feed rollers have nylon hubs and rims connected by sponge rubber cores for minimum gripping of the web whatever its thickness. A modification has continuously applied brake means and rollers with a flatted perimetrical portion for rapid intermittent feeding of web to stack.

8 Claims, 11 Drawing Figures

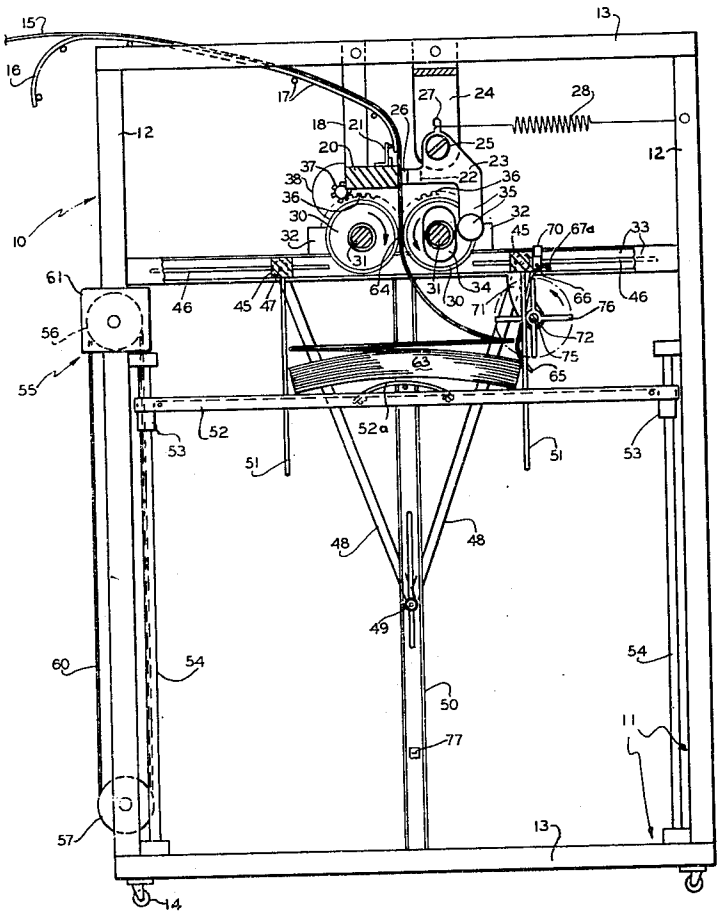

PATENTED FEB 8 1972

3,640,521

SHEET 1 OF 4

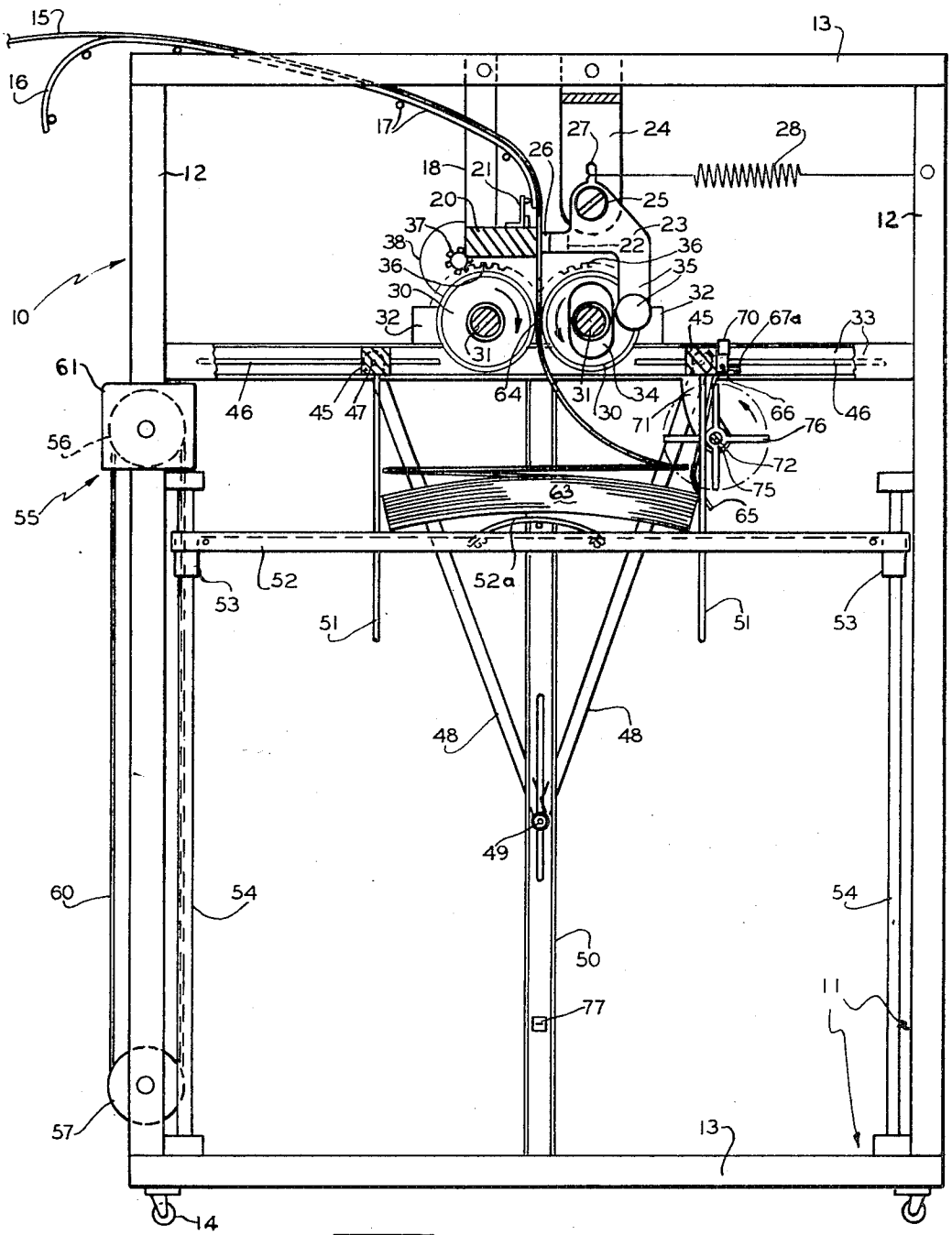

Fig. 1

INVENTOR.
RONALD W.F. HUTLEY

BY Brans and Jenney
att'ys.

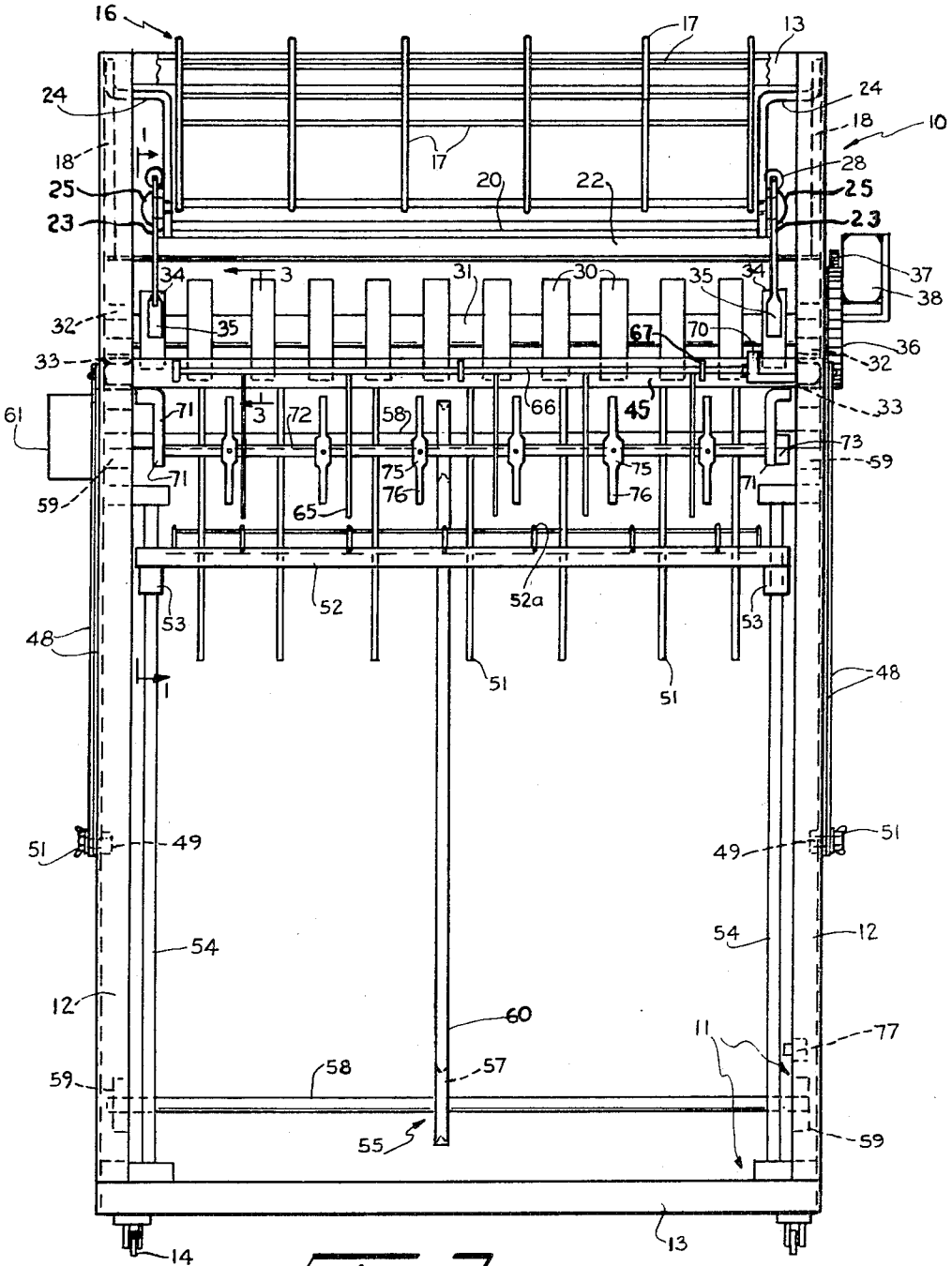

Fig. 2

INVENTOR.
RONALD W. F. HUTLEY

BY Bruns and Jennings
Att'ys

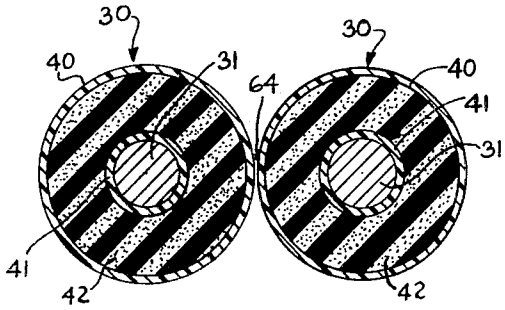

Fig. 3

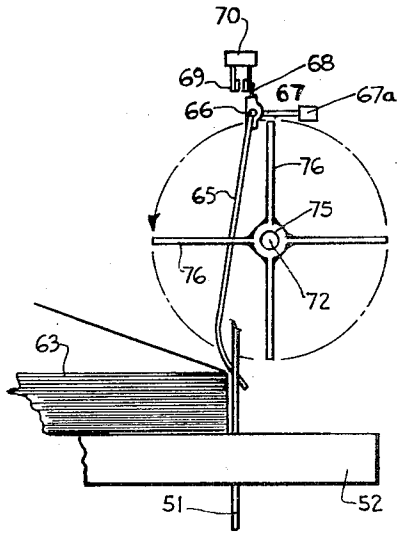

Fig. 4

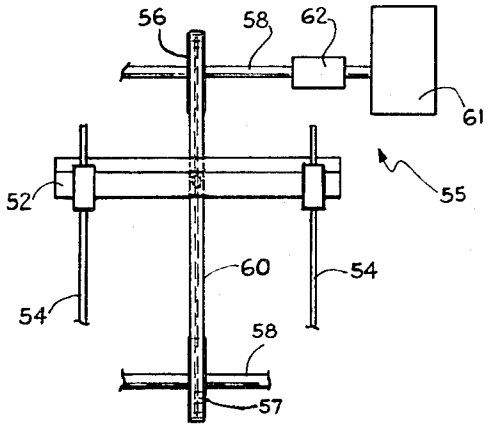

Fig. 5

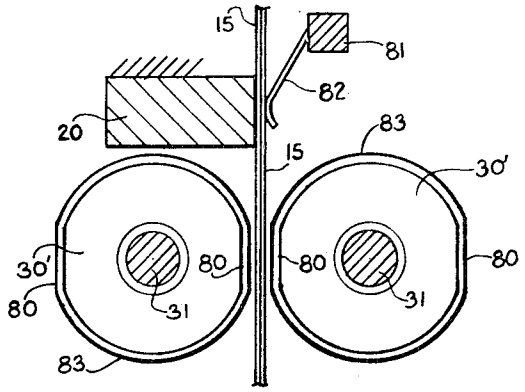

Fig. 6

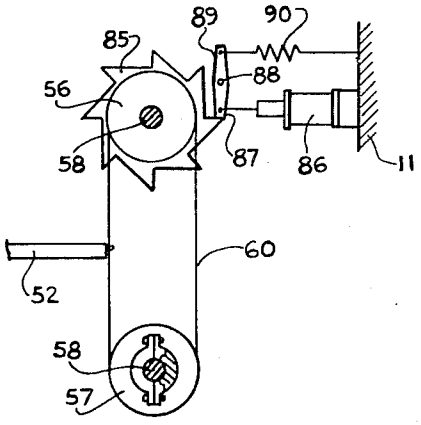

Fig. 7

INVENTOR.
RONALD W. F. HUTLEY

BY Bruns and Jennes
Attys

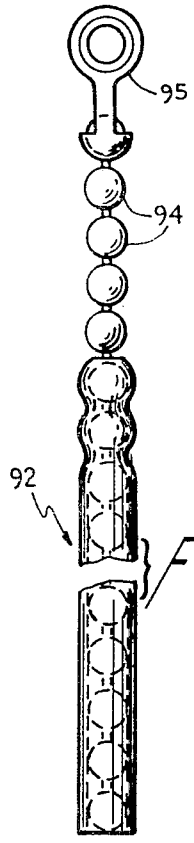

Fig. 10

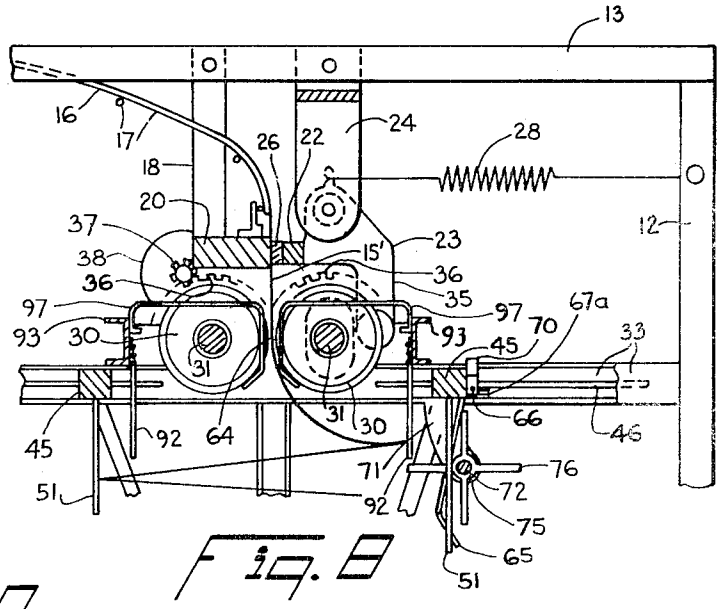

Fig. 8

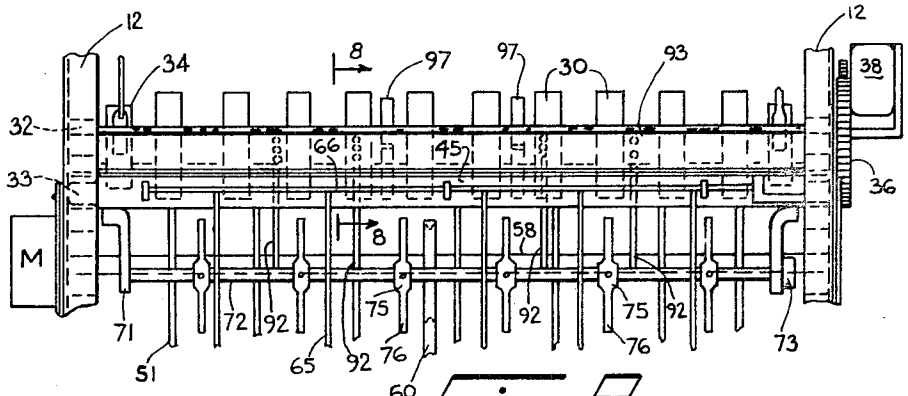

Fig. 9

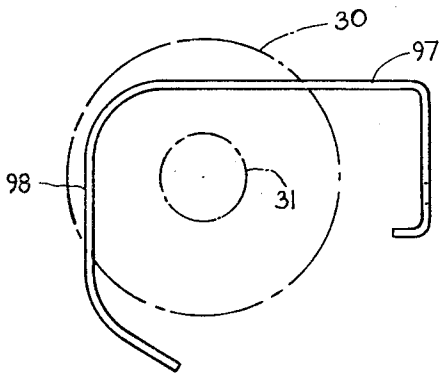

Fig. 11

INVENTOR.

RONALD W. F. HUTLEY

BY

Burns and Jennay

Att'ys

APPARATUS FOR STACKING FAN FOLDED PAPER

BACKGROUND OF THE INVENTION

This invention relates to apparatus for guiding and stacking continuous prefolded forms, and more particularly relates to apparatus for receiving the forms from a high-speed printer and stacking them in zigzag plies on a tray, the tray being automatically lowered as the stack builds up.

High-speed printers frequently have no means for stacking the output requiring the operator to constantly monitor the output. Where a mechanical stacker is provided it is usually cheap and ineffective or expensive and largely ineffective.

SUMMARY OF THE INVENTION

Means are provided for guiding the web from the printer to a combination of brake means and feed rollers for rapidly intermittently feeding the web down toward a tray on which zigzag plies of forms build up in a stack, the folds reforming themselves as the web falls from the rollers. Sensing means are provided for controlling a tray lowering device so that the top of the stack is maintained substantially at a predetermined level below the rollers for allowing the folds to reform properly in the web. The intermittent feed of the web stimulates the reforming of the folds.

In one form of the invention the brake is applied intermittently to the web above the feed rollers, the brake being operated by cams on one of the roller shafts.

In another form of the invention the brake is lightly applied continuously. The feed rollers, which are driven synchronously, have flatted perimetrical portions at diametrically opposite sides so that the web is fed down intermittently when the curved portions of the rollers grip the web and the feeding of the web is interrupted when the flatted portion of the rollers is adjacent the web.

The feed rollers have a hard outer shell of a lightweight material, such as nylon, which has little friction against the web, a hub or tubular portion, which also may be nylon, is secured to the roller shaft, and the shell and hub are connected by a lightweight material such as sponge rubber which has little resilience and great compressibility. The rollers, therefore, have a low inertia, a rigid surface with a low coefficient of friction and a soft core to allow for rim deflection with reference to the shaft so that different paper pack thicknesses may be accommodated without a large amount of pressure being applied to the paper.

Pack thickness may be a single layer, a pair of paper layers with a layer of carbon paper therebetween, and up to five or six layers of paper with carbon therebetween, all accommodated by such rollers without adjustment of the roller shaft spacing. To cut down on inertia forces, the rollers are preferably a plurality of opposed short rollers spaced in pairs along continuously rotating parallel shafts. The web width may be from 4 to 18 inches.

Feeler fingers projecting radially from a shaft parallel to one folded edge of the stacked forms on the tray sense the height of the stack top below the rollers and the feeler shaft operates a switch initiating lowering of the tray when the feeler fingers are cammed outward by the top of the stack. When the tray is lowered allowing the fingers to return, the lowering motion ceases.

To insure that the sensed folded edge of the top form settles quickly on top of the stack a plurality of flexible fingers projecting radially from another continuously rotating shaft force the sensed folded edge of each top ply of the stack down on the stack.

Pendant fingers project downward to define the length between folds of the forms on the stack and these fingers may be manually moved outward for longer form lengths.

The tray is slidably mounted for vertical translational movement and is secured to a flexible member passing over pulleys above and below the tray. In one form the tray may be lowered by operating an electric motor which is connected to one pulley shaft through a worm and gear so that the tray is held motionless when the motor is not operated and lowered when the motor is energized. In another form the pulley is held from rotation by a ratchet wheel and pawl and the pawl may be withdrawn by means of operating a solenoid to lower the tray by gravity. The switch operated by the feeler finger shaft initiates operation of the worm gear drive motor or the pawl withdrawal solenoid.

Since a high speed printer, such as the printout portion of a computer, may operate at skip-line speeds where the forms emerge from the printer at intermittent random speeds, it is important that the form stacking apparatus be adapted to receive the forms at whatever rate they leave the printer. When the feed rollers are driven at a speed on the order of 300 to 600 r.p.m. the rollers can feed the paper to the tray at a rate equal to the highest speed at which the forms are ejected from the printer. When the forms leave the printer at a slower rate there is little strain on the paper web since the feed rollers have minimal grip or friction with the web. At the same time the intermittent feeding down of the web toward the tray allows each fold of the web opportunity to refold without backfolding or uncontrolled collapse.

BRIEF DESCRIPTION OF THE DRAWINGS

FIG. 1 is a side elevational view of apparatus embodying the invention, certain parts being cut away or shown in section on the line 1–1 of FIG. 2 for clarity;

FIG. 2 is a front elevational view thereof;

FIG. 3 is an enlarged transverse sectional view through a pair of rollers on the line 3–3 of FIG. 2;

FIG 4 is a fragmentary, diagrammatical view of the stack height sensing portion of the apparatus shown in FIGS. 1 and 2;

FIG. 5 is a diagrammatical front elevational view of the tray-lowering mechanism of the apparatus shown in FIGS. 1 and 2;

FIG. 6 is a diagrammatical end view, partly in section, of the brake and feed roll portion of a modified form of apparatus;

FIG. 7 is a diagrammatical side elevational view of a modified form of tray-lowering mechanism;

FIG. 8 is a fragmentary side elevational view, similar to FIG. 1, of apparatus modified by the addition of deflectors and strippers, partly in section on the line 8–8 of FIG. 9;

FIG. 9 is a fragmentary front elevational view thereof;

FIG. 10 is an enlarged elevational view of one of the deflectors shown in FIGS. 8 and 9; and

FIG. 11 is an enlarged side elevational view of one of the strippers shown in FIGS. 8 and 9.

DESCRIPTION OF THE PREFERRED EMBODIMENTS

The form-stacking apparatus 10 has a supporting frame 11, shown in FIGS. 1 and 2, which may comprise vertically extending angle irons 12 and horizontally extending angle irons 13 welded together to form a unitary frame. Supporting casters or wheels 14 may be provided at the four corners so that the frame 11 may be easily backed up to the printer for receiving a continuous web 15 of prefolded forms.

Guide means 16 for the entering web 15 is provided at the top of the frame 11 and may conveniently take the form of a grill of crossed metal wires 17, lying on top of the frame and extending from the rear of the frame to the middle thereof, being curved to lead the web downward at the center of the frame.

Pendantly secured by brackets 18 secured to the top side angles 18, is a fixed brake bar 20, best seen in FIG. 1, extending across the frame. An angle iron 21 secured to the bar 20 may conveniently form a rest for the front end of the web guide 16 and the forward surface of bar 20 is adapted to have the web 15 drawn downward thereacross.

Another bar 22 extends across between plates 23 which are pivotally secured on brackets 24 on shouldered screws 25, the brackets 24 being pendantly secured to the side angles 13. The face of bar 22 adjacent web 15 has a rubber pad 26 secured thereon and the pivot plates 23 have an upwardly projecting

portion 27 to which one end of a spring 28 is attached, the other end of the spring being anchored to the frame 11 for biasing rubber pad 26 against the web 15 opposite the bar 20.

Below the bars 20 and 22 are opposed pairs of feed rollers 30 spaced along parallel shafts 31, which extend across the frame so that the convergence of the rollers are directly under the opposed faces of pad 26 and bar 20. The shafts 31 are received in appropriate journals 32 secured to appropriate horizontal members 33 extending from front to rear of the frame on either side.

One shaft 31 has a double nosed cam 34 secured thereto at either end and each pivoted plate 23 has a pendant arm forming a cam follower 35 operated by a cam 34 for swinging the pad 26 away from the web 15.

At one side of frame 11 each shaft 31 has a gear 36 of a meshed pair secured thereto, one of the gears 36 being driven by a pinion 37 secured to the drive shaft of an electric motor 38 appropriately secured to the frame 11 for continuously driving the feed rollers 30 in the direction of the arrows in FIG. 1 for feeding the web 15 downward.

Referring to FIG. 3, each feed roller 30 of each pair is of a novel construction having a thin outer shell 40 of a lightweight material, such as nylon, having a low coefficient of friction with the web 15. An inner tubular portion or hub 41, which may be of the same material, is adapted to be secured on the shaft 31. The outer shell and inner tubular portion are connected with an annular portion or core 42 of a lightweight material having little resiliency but high compressibility, such as sponge rubber, bonded to the shell and tube. This results in a roller having low inertia, with a rigid surface which grips the web lightly, the core 42 allowing for rim deflection with respect to the shaft, adapting the pairs of rollers to accommodate a web of forms having greater pack thickness without appreciably increasing the pressure that the rollers apply to the web.

The side members 33 may be channels and a pair of bars 45 extending across the machine are adapted to slide in the channels 33 frontward and rearward of the machine, one bar being forward of the rollers 30 and the other rearward. The channels 33 are slotted at 46, the bars 45 having pins 47 extending axially at each end through the slots. Outward of the slots 46, the pins are pivotally connected to the end of a member 48, the members 48 extending convergingly downward and having their ends each connected to a vertically sliding pin and slot arrangement at 49 in a vertically extending member 50 which supports the center of each member 33 at its center from the bottom of frame 11. The pin and slot arrangement shown in FIG. 2 may have a wingnut 51 for locking the arrangement to member 50.

When the locknut 51 is unlocked the bars 45 may be manually slid outward, the members 48 causing the bars 45 to move synchronously in opposite directions equal distances on either side of the vertical plane passing down from the convergence of rollers 30. Bars 45 have a plurality of wirelike pendant rods 51 secured thereto and spaced therealong to limit the space into which the web is fed to fold the forms. Moving the bars outward accommodates longer forms.

Below the members 33 and bars 45 a tray 52 is slidingly supported for vertical translational movement by means which may take the form of journals 53 at its four corners. The journals are slidingly supported on vertical rods 54 secured at their tops and bottoms in frame 11. The top surface of tray 52 may conveniently take the form of a grill of crossed wires, the transverse wires of which are spaced to leave slots for the pendant rods 51 when tray 52 is raised. The tray 52 has a raised portion 52*a* at its center extending across the tray, as is conventional, to raise the center of a stack of forms on the tray to compensate for the increased thickness of the plies of the stack at their folded ends.

Tray 52 is supported by means 55, shown in FIGS. 1 and 2 are diagrammatically in FIG. 5. Pulley 56 above the tray, and pulley 57 below it, are secured to respective shafts 58 extending across the frame and rotatably secured therein by suitable journals at 59 bolted to the vertical members 12. A flexible member 60, shown as a V-belt in FIGS. 1 and 2, is attached at one point to the edge of the tray and extends around the pulleys 56 and 57.

One of the shafts 58, preferably the upper one, is driven by a worm gear motor 61, the motor driving the shaft through a gear and worm connection, not shown, so that the tray is lowered when the motor runs but is withheld from being lowered, regardless of the tare weight of the tray, by the worm and gear connection. As best seen in FIG. 5, the motor driven shaft 58 is driven through a one-way device such as a ratchet or wrap spring clutch 62 so that tray 52 may be manually raised without connection to the motor.

Obviously there is an optimum distance, or small range of distances, from the top of the stack 63 of folded forms on the tray to the convergence 64 between rollers 30 for obtaining the proper folding of the forms. If this distance is too great backfolding of the forms may occur. If the distance is too small the form will deform unduly between the rollers. For this reason means are provided for lowering tray 52 when the stack 63 builds up on the tray above the optimum level. Between the form limiting rods 51, a plurality of sensing fingers 65 (FIG. 2) extend downwardly radially from a sensing shaft 66 to which their upper ends are secured. Shaft 66 is rotatably secured in journals 67 which are secured to one of the bars 45, preferably the front one. As best seen in FIG. 1, the sensing fingers 65 extend diagonally downward toward the folded forward edges of the forms on stack 63 on the tray and their lower ends are angled outward of the stack for sensing the folded edge of the top form on the stack.

As best seen in FIG. 4, a counterweight 67*a*, on an arm projecting forwardly and radially from the sensing shaft 66, biases the fingers 65 toward the stack. An arm 68 projects radially upward from shaft 66 at one end and is adapted to close the normally open contacts 69 of a switch 70 when the lower ends of the fingers 65 are moved outwardly of the stack by the build up of forms on the tray. The switch 70 is adapted to close the electrical circuit to motor 61 lowering the tray. When the top of the stack 63 is lowered the fingers 65 again move inward and the circuit is broken.

Referring again to FIGS. 1 and 2, the forward bar 45 has secured thereto, at either end, pendant brackets 71 which rotatably support another shaft 72. Shaft 72 is continuously rotated by a light motor 73 secured to one of the brackets 71. The rate of rotation of shaft 72 is of the order of one-fifteenth to one-twentieth of the rate of rotation of the feed rollers 30.

Spaced along shaft 72 between the fingers 65 and rods 51 are a plurality of wheels 75 secured to the shaft and having a plurality of flexible plastic or rubber spokes or fingers 76 projecting radially therefrom. The spokes 76 are of such length as to beat down the forward fold of each top ply of the stack 63 as it reforms so that fingers 65 can sense the true height of the stack.

As the tray 52 is lowered the stack 63 builds up until the tray approaches the lower end of frame 11. At a point before tray 52 reaches the pulley 57 it trips a limit switch 77 secured to the member 50. When switch 77 is tripped it breaks the circuit to motors 38 and 61 signalling the operator to unload the stacked forms and to then manually raise the tray 52, which restores the circuits to the motors.

In operation the web 15 of printed forms is led in over guide 16 to the convergence 64 between rollers 30 which then grip the web and feed it down toward the tray. The intermittent braking action between bar 20 and pad 26 caused by the cam-operated oscillation of plates 23 feeds the web down intermittently. When the pad 26 engages the web, downward feeding ceases because the pad grips the web more strongly than the rollers 30. When the brake is released, however, the web is fed downward toward the tray. The pause between the intervals in which the web is fed downward, however slight, allows the folds in the web to reform and the form is fed toward the front or back of the tray according to the direction of the fold. The distance that the web is fed downward each time the brake is

released is short but the downward motion of the web increases the refold between the form being fed and the previously fed form which has some inertia because of the previous stoppage of the web feed.

As additional forms are fed downward the next fold passing between rollers 30 is induced to fold in the correct direction by the stress of the bending of the form which has just emerged from the rollers as plainly shown in FIG. 1.

The rods 51 define an area at the top of the stack within which the folded forms are confined and the spokes 76 of the continuously rotating wheels 75 force the sensed forward folds of the top ply of the stack down past the bent ends of the sensing fingers 65. When the bent ends are forced outward by the top of the stack the tray is lowered by the closing of switch 70 as described above. If the tray 52 is lowered to the limit switch 77, the stack 63 must be removed and the tray returned to its uppermost position.

In FIG. 6 a modified form of brake and feed rollers is shown. The rollers mounted on the shafts 31 are similar in construction to the rollers 30 described above except that the outermost shell 40 is flatted at diametrically opposite sides 80 so that the rollers do not grip the web 15 when the flatted sides are adjacent the web as shown.

Opposite the brake bar 20 is another bar 81 also fixed in the framework and from bar 81 a plurality of spring brakes 82 engage the web continuously. Brakes 82 are curved spring wires engaging the web lightly so that when the curved portions 83 of rollers 30′ engage the web the grip of the rollers on the web is greater than that of the spring brakes 82. The web is, therefore, fed down toward the tray, not shown, rapidly and intermittently just as in the apparatus 10.

In FIG. 7, modified means for lowering the tray are shown. At one end of one shaft 58 a ratchet wheel 85 is provided secured to the shaft. Instead of the motor 61, a solenoid 86 is mounted in the frame 11 and a pawl 87 is oscillatably mounted adjacent the ratchet wheel 85.

The pawl 87 is mounted on a pivot pin 88 fixed with respect to the frame and the pawl has an oppositely projecting arm 89 which is biased by a spring 90 so as to normally urge pawl 87 into engagement with a tooth on the ratchet wheel 85.

Solenoid 86 is operatively connected to the pawl 87 so as to withdraw the pawl from the ratchet tooth when the solenoid is energized. The operating circuit of the solenoid includes the switch 70 so that when switch 70 is operated the tray 52, which is secured to the flexible member 60 around pulleys 56 and 57, falls by gravity.

In order that the tray will not fall too rapidly, an escapement mechanism or brake, indicated by a friction brake 91 on lower shaft 58, is provided. The tray falls slowly, therefore, and its downward movement is stopped when switch 70 is again open and the circuit to solenoid 86 is interrupted, the pawl 87 then being returned into engagement with the ratchet 85 by spring 90.

FIGS. 8 and 9 show a portion of machine 10 modified for use with high-speed printers using a single- or double-layer pack web which is comparatively narrow. With such comparatively lightweight web, the normally light gripping action of the rollers 30 becomes comparatively greater due to the inertia of the web, after it is stopped momentarily by the brake 20, 26, being comparatively less resulting in a high-energy level in the passage of each form downward from the rollers. The resulting effect of air resistance on the refolding form is also necessarily greater as compared to the lighter weight form.

Accordingly, a plurality of flexible deflectors 92, best seen in FIG. 10, are suspended from cross members 93, supported on the side members 33 adjacent the rollers 30, as shown in FIGS. 8 and 9. Each deflector 92 comprises a bead chain 94, having a supporting ring 95 secured to one end by which it is secured to the crossmember 93 by screw means, not shown. The lower end of chain 94 is encased in plastic tubing 96, the upper end of which is heat shrunk to secure it about the beads of the chain.

The crossmembers 93 are positioned so that deflectors 92 hang downward adjacent the rods 51, which limit the position of the folds of the forms on the tray, and between the rods 51 and the rollers 30. Deflectors 92 extend downward only to the level of shaft 72, on which the spoked wheels 75 are mounted so that they do not interfere with the stacking of three, four, five or six layer forms or forms of comparatively wide and, therefore, comparatively heavy forms.

Referring to FIG. 8, when a single layer web 15′ is fed downward between rollers 30 at high speeds, the lighter forms fold first closer to the rollers than the heavier forms shown in FIG. 1 and the first fold is stopped short of the limit rods 51 by deflectors 92. The slightly flexible deflectors absorb some of the energy of the forwardly or rearwardly deflected fold and swing back toward the rollers to guide the form into the correct fold before the fold falls or is forced downward by the spokes 76 of the wheels 75.

Also shown in FIGS. 8 and 9 are two pairs of paper strippers 97 which are also secured to the crossmembers 93 near the center of the apparatus and extend therefrom above the shafts 31 between adjacent opposed pairs of rollers 30 and then extend downward at 98 on either side of the web 15′.

As best seen in FIG. 11, each stripper 97 comprises a narrow, bent strip of sheet metal whose downwardly extending portion 98 is disposed short of the convergence 64 between rollers 30 but extend downward beyond the perimeter of the adjacent roller 30, as shown in FIG. 11, so that the web 15′ is forced away from the roller as it passes downward.

A single layer web which is also narrow and, therefore, light in weight, tends to be attracted by static electricity built up on rollers 30 and to follow one roller or the other instead of falling free of the roller. For this reason, the strippers 97 are also provided when the apparatus 10 is used with narrow single-layer forms, the portions 98 preventing the web from following the roller.

It will be apparent to those familiar with the art that the invention may be embodied in other specific forms without departing from the spirit or essential characteristics thereof.

I claim:

1. In an apparatus for guiding and stacking a web of continuous prefolded paper forms on a tray the combination of feed roller means mounted on parallel side by side shafts, the roller means comprising a plurality of circular rolls spaced in opposed pairs along the parallel shafts, each roller on one shaft being opposed by a roller on the other shaft thereby forming a convergence therebetween, the web being adapted to be contacted by the opposed rollers at the convergence, means for continuously and synchronously rotating the shafts for feeding the web down from the convergence toward the tray, guide means for conducting the web to the convergence, the tray being slidably mounted for vertical translational movement below the rollers for receiving a stack of forms in zigzag plies thereon, the roller convergence being disposed above the center of the tray and always lying in a vertical plane substantially midway between the folded edges of the forms when stacked, means for sensing the distance of the top of such stack below the rollers, means responsive to the sensing means for automatically lowering the tray to maintain the uppermost form on the stack a preselected distance from the roller convergence, said distance being sufficient to permit the passage of forms toward the stack top without undue angularity at the prefolds and small enough to prevent backfolding or uncontrolled collapse of the forms, the web-contacting portion of the rollers being of a material having a low coefficient of friction, and brake means for the web comprising a fixed bar across the apparatus having a surface abutting a first surface of the web passing from the guide means to the roller means and a movable rubber pad having a flat surface normally biased against the second surface of the web for forcing the web against the fixed bar surface, one of the parallel shafts having cam means thereon, the rubber pad having cam follower means operatively connected thereto for periodically moving the rubber pad away from the web, whereby the web is

intermittently locked by the pressure of the pad toward the fixed bar and released thereby by the operation of the cam means on the follower means for freeing the web to be gripped between the rollers for moving the web intermittently downward.

2. The apparatus defined in claim 1 wherein the circular rolls comprise a tubular portion secured to the shaft and a lightweight outer circular shell of a material having a low coefficient of friction with the web spaced from the tubular portion, the shell being connected to the tubular portion by an annular portion of lightweight soft spongy material having a low degree of resilience and a high degree of compressibility.

3. In an apparatus for guiding and stacking a web of continuous prefolded forms on a tray, the combination of feed roller means mounted on parallel side by side shafts and means associated with the roller means for intermittently preventing the downward feeding of the web by the roller means, the roller means comprising a plurality of rolls spaced in opposed pairs along the parallel shafts, each roller on one shaft being opposed by a roller on the other shaft for forming a convergence therebetween, the web being adapted to be contacted by the opposed rollers at their convergence, the tray being slidably mounted for vertical translational movement below the rollers for receiving a stack of forms in zigzag plies thereon, the roller convergence being disposed above the center of the tray and lying in a vertical plane substantially midway between the folded edges of the forms when stacked, means for sensing the distance of the top of such stack below the rollers, means responsive to the sensing means for automatically lowering the tray to maintain the uppermost form on the stack a preselected distance from the roller convergence, said distance being sufficient to permit the passage of forms toward the stack top without undue angularity at the prefolds and small enough to prevent backfolding or uncontrolled collapse of the forms, the apparatus having a continuously rotating shaft rotatably mounted parallel with and below and outward of the parallel roller shafts, a plurality of flexible operating fingers extending radially from the continuously rotating shaft, means for rotating the continuously rotating shaft at a slower rate than the parallel roller shafts, the flexible fingers being of such a length as to carry the folded edge of each top form on the stack which is adjacent the sensing means down on to the top of the stack adjacent the sensing means.

4. The stacking apparatus defined in claim 3, the apparatus having a pair of transversely extending bars slidingly supported in the apparatus parallel to the roller shafts, one bar being in front of the rollers and the other rearward thereof, the bars having a plurality of pendant rods secured thereto and extending downward below the rollers for limiting the forward and rearward travel of the folded edges of the forms below the roller, the tray being slotted to receive the lower ends of the rods, and means operatively connected to the bars to position the bars at equal distances forward and rearward of the center of the tray when the bars are moved outwardly to accommodate longer forms.

5. The paper-stacking apparatus defined in claim 4 having flexible paper deflecting means pendantly supported below and forwardly and rearwardly of the rollers, inward of the pendant rods, and above the continuously rotating shaft for deflecting downward the refolded edges of the forms short of the folded edges of the stack, whereby lightweight forms fed downward at high speeds are prevented from being thrown forward and rearward too far.

6. The paper-stacking apparatus defined in claim 5 having paper stripper bands supported forward and rearward of the rollers and extending between spaced rollers short of the perimeter of the adjacent rollers, and then extending downward past the perimeter of the adjacent rollers for guiding the web away from the lower portion of the rollers whereby lightweight refolded forms are prevented from adhering to the rollers.

7. The paper-stacking apparatus defined in claim 3 having vertically extending slide means on which the form-stack-receiving tray is slidably mounted for translational vertical movement below the roller means, upper and lower tray pulleys, upper and lower pulley shafts rotatably mounted in parallel in the apparatus above and below the tray and on which the pulleys are respectively mounted, a flexible member having a first end secured to the tray and passing continuously around the upper pulley and thence around the lower pulley and having its other end secured to the tray adjacent the first end, a ratchet wheel secured to one of the pulley shafts, a pawl pivotally secured in the apparatus and normally biased to engage the ratchet wheel for preventing rotation of the tray pulleys, a solenoid secured in the apparatus and connected to the pawl to withdraw the pawl from engagement with the ratchet wheel when the solenoid is operated, the sensing means when operated being adapted to initiate the operation of the solenoid, and brake means associated with one of the pulley shafts to prevent too rapid lowering of the tray, whereby the spring-biased pawl reengages the ratchet wheel when the switch means is no longer operated.

8. In an apparatus for guiding and stacking a web of continuous prefolded paper forms, a frame, a pair of roller shafts rotatably mounted side by side in parallel across the frame, a plurality of circular rollers spaced in opposed pairs along the shafts and adapted to frictionally engage either surface of the web at the convergence therebetween, means for continuously rotating the shafts in opposite directions synchronously for feeding the web downward, means above the rollers for guiding the web toward the convergence of the rollers including a bar fixed in the frame parallel to the rollers, the bar having a flat surface adapted to contact a first surface of the web, a movable bar pivotally mounted in the frame parallel to the fixed bar, the movable bar having a surface of a material having a high coefficient of friction with the web adapted to normally oppose the fixed bar flat surface, means for normally biasing the movable bar against the second surface of the web and toward the fixed bar, cam means on one of the roller shafts, the movable bar having cam follower means secured thereto adapted to swing the movable bar away from the fixed bar in response to actuation by the cam means, a tray slidably mounted in the frame for vertical translational movement below the rollers for receiving a stack of forms in zigzag plies thereon, the roller convergence being disposed above the center of the tray and always lying in a vertical plane substantially midway between the folded edges of the forms when stacked, means for sensing the distance of the top of such stack below the rollers, and means responsive to the sensing means for automatically lowering the tray to substantially maintain the uppermost form on the stack a preselected distance from the roller convergence, the rollers having an outer circular shell of a lightweight material having a low coefficient of friction with the web and an inner tubular portion secured to the roller shaft, the inner portion and the shell being connected by an annular portion of lightweight soft spongy material having a low degree of resilience and a high degree of compressibility, whereby the web is lightly gripped by the rollers for feeding the web downward regardless of the thickness of the web and the intermittent braking action of the movable bar against the fixed bar imparts a rapidly intermittent feeding of the web on to the tray for facilitating the reforming of the preformed folds in the web.

* * * * *