350-397 SR
XR 1,262,954

F. E. IVES.

MOTION PICTURE APPARATUS.

APPLICATION FILED FEB. 18, 1914.

1,262,954.

Patented Apr. 16, 1918.

3 SHEETS—SHEET 1.

Fig. 1.

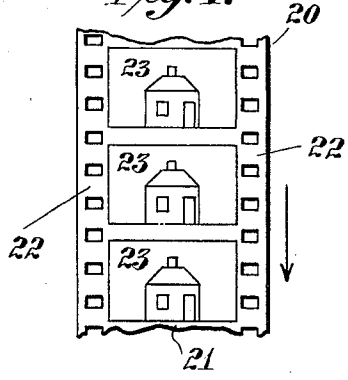

Fig. 2.

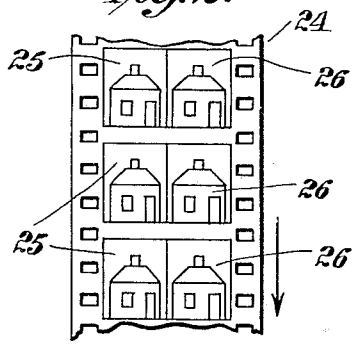

Fig. 3.

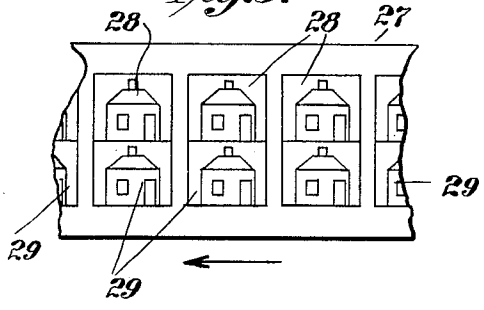

Fig. 4.

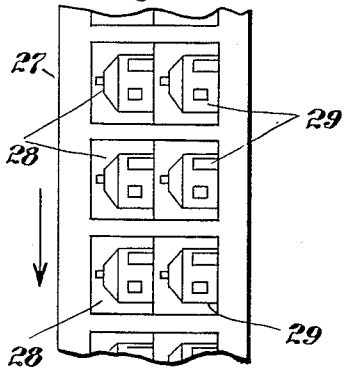

Fig. 5.

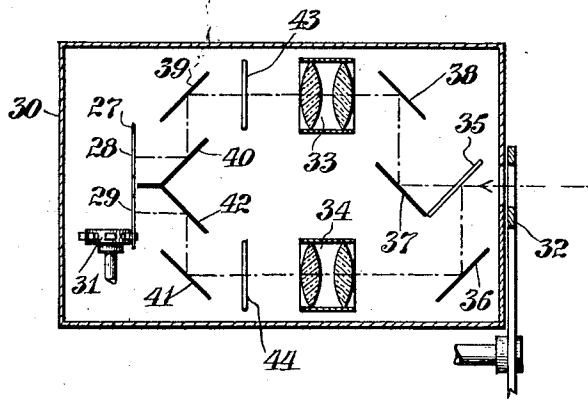

Fig. 5a

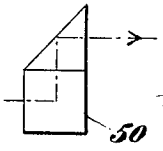

Fig. 6.

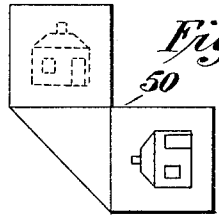

Attest:

M. Tucker

Inventor:
Frederic E. Ives,
by Rogers, Kennedy & Campbell,
his Attys.

1262954
OR I V 352/83

350/154 UX

F. E. IVES.

MOTION PICTURE APPARATUS.

APPLICATION FILED FEB. 18, 1914.

1,262,954.

Patented Apr. 16, 1918.

3 SHEETS—SHEET 2.

may use dichroic reflector

Fig. 7.

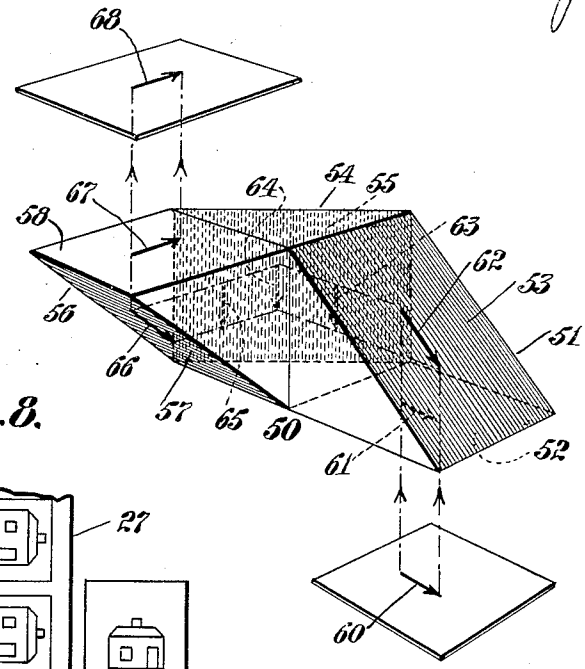

Fig. 8.

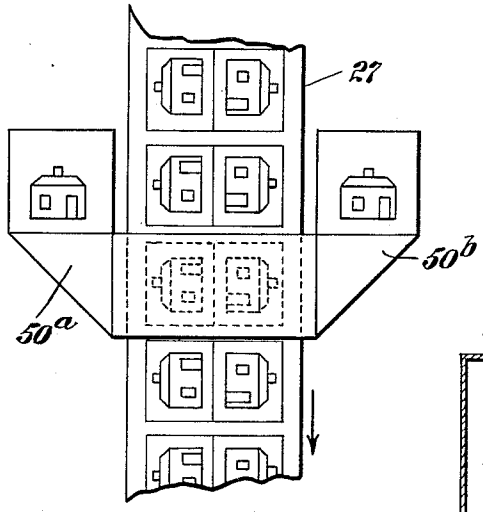

Fig. 9.

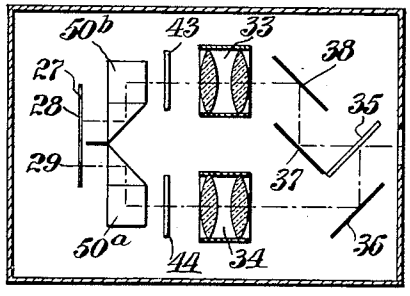

Fig. 10.

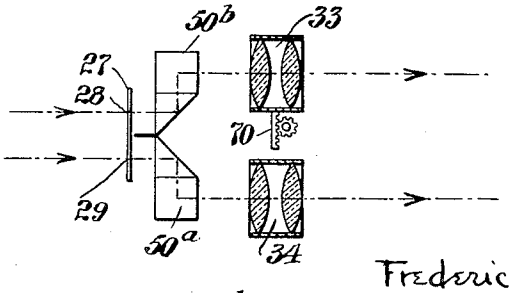

Attest:

M. Lucker

Inventor:
Frederic E. Ives,
by Rogers, Kennedy & Campbell,
his Attys.

F. E. IVES.

MOTION PICTURE APPARATUS.

APPLICATION FILED FEB. 18, 1914.

1,262,954.

Patented Apr. 16, 1918.

3 SHEETS—SHEET 3.

Fig. 11.

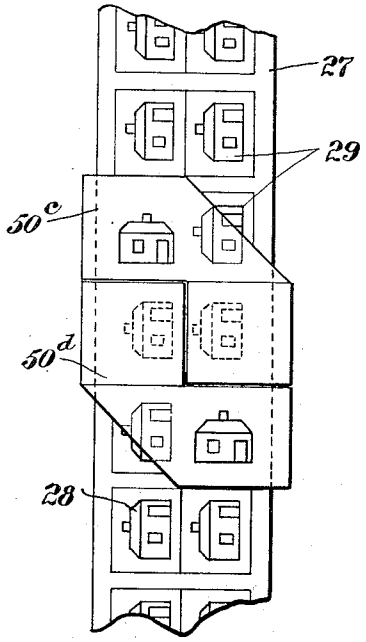

Fig. 12.

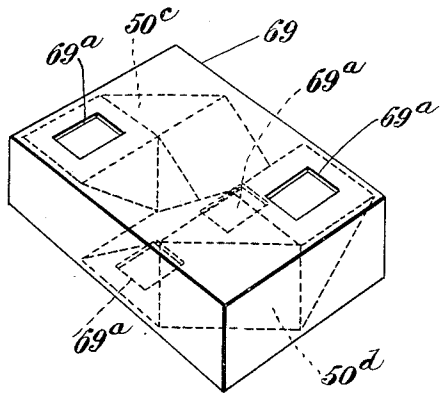

Fig. 13.

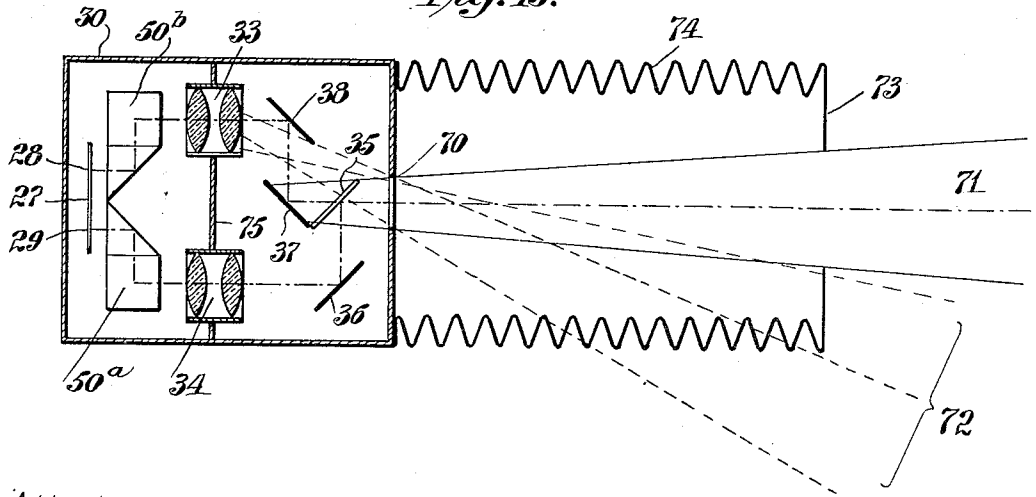

Attest:

C. Mitchell

M. Tucker.

Inventor:

Frederic E. Ives,

by Rogers, Kennedy & Campbell,

his Attys.

UNITED STATES PATENT OFFICE.

FREDERIC E. IVES, OF WOODCLIFF-ON-HUDSON, NEW JERSEY.

MOTION-PICTURE APPARATUS.

1,262,954. Specification of Letters Patent. Patented Apr. 16, 1918.

Application filed February 18, 1914. Serial No. 819,345.

To all whom it may concern:

Be it known that I, FREDERIC EUGENE IVES, a citizen of the United States, residing at Woodcliff-on-Hudson, in the county of Bergen and State of New Jersey, have invented certain new and useful Improvements in Motion-Picture Apparatus, of which the following is a specification, reference being had therein to the accompanying drawing.

This invention relates to motion picture apparatus and more particularly to apparatus adapted for making the exposures or for exhibiting the finished pictures so as to enable the reproduction of not only the motion but the coloring of the original subject.

Heretofore reproduction of motion pictures in color has been effected by taking or by projecting color selection images in rotation, for example, images alternately representing the green and then the red elements of the original subject, so that simultaneously with the effect of motion the colors are blended, in different proportions over the picture, to simulate the natural colors. Three primary colors might be employed to give more nearly perfect color reproduction, but employing the two colors, red and green, affords a fair working compromise and for convenience that system will be used herein for illustration.

An objection to the system just referred to is that any fast moving object contrasting with its background causes an exhibition of alternate red and green bands or fringes upon the curtain. It is an object hereof to avoid such color flashes, and specifically it is an object to avoid the defect by pairing each image of one color with an image of the other color or colors. In other words, by simultaneously taking each pair of red and green images there will necessarily be a proper color union over the whole area of the projected picture. This object is accomplished herein in an efficient and practical way.

Another object hereof is to permit the employment of paired or matched images without the necessity of providing a special projecting apparatus therefor and this object is accomplished as will be hereinafter shown by providing the novel features in the form of attachments. This is extremely important since the very large number of projecting apparatuses now in use may thereby be employed either for ordinary motion picture work, or by merely a matter of attachments, detachments and adjustments adapted for motion pictures in color.

Other and more detailed objects hereof will be elucidated in the hereinafter following description of one or more illustrative embodiments of the present invention.

To the attainment of the objects referred to the present invention consists in the novel system, apparatus, combinations, arrangements, devices and other features herein described or illustrated.

Figure 1 indicates the ordinary form of motion picture film, namely, in ribbon-form, the margin of which may be considered perforated to coöperate with driving mechanism. The arrow shows the direction of travel.

Fig. 2 shows a similar film with each picture space divided vertically into two halves with paired images thereon in transverse alinement.

Fig. 3 is a similar film but with the paired images disposed in each picture space that they both stand flatwise of the direction of the film.

Fig. 4 indicates the same film as in Fig. 3, supposing it to be run vertically through an ordinary projecting machine, the images now standing edgewise instead of in true position.

Fig. 5 indicates diagrammatically an apparatus which may be employed for exposing a film as in Fig. 3.

Fig. 5ª indicates a triple reflecting quarter revolution optical instrument which may be placed in front of an exposing or projecting apparatus for turning the images through 90° or between edgewise and true positions.

Fig. 6 is a rear view of the image revolving instrument of Fig. 5ª.

Fig. 7 is an isometric perspective of the image revolving instrument with diagrammatic indication of its action upon an image.

Fig. 8 shows a modification employing not one but a pair of quarter revolution optical instruments indicating a relative arrangement between them and the film.

Fig. 9 diagrammatically shows a modification in which the pair of image revolving instruments is located between the film and the lens or lenses of the apparatus, and with optical displacement devices in front of the lenses.

Fig. 10 is a modification in which the optical devices in front of the lenses are dispensed with and the color screens combined with the image revolving instruments, for the purpose of projecting the positive images in register upon a screen.

Fig. 11 shows a modification in which, unlike Fig. 8, the two image revolving instruments are compactly nested together.

Fig. 12 shows a pair of revolving instruments united in a suitable frame in convenient form for attachment and detachment.

Fig. 13 shows an apparatus in front of which has been added a limiting diaphragm device which may be employed in all modifications for obviating certain defects.

For the purposes of illustration and comparison, a section 20 of an ordinary motion picture film is shown in Fig. 1. This comprises the transparent film strip 21, vertically traveling, having the marginal portions 22 which may be supposed to be perforated to coöperate with sprockets or other guiding or advancing mechanism. On the strip of ribbon are a succession of photographically prepared images 23, 23, etc., in which the subject appears upright. Each image is of somewhat greater width than height giving a horizontally oblong shape which is the preferred and standard picture shape and one which more easily lends itself to the ordinary subjects of motion pictures. Fig. 2 illustrates one way in which paired images might be arranged by the use of some optical means capable of separating the light from the subject, or of combining the paired images for exhibition. In this embodiment a film 24 has each space, corresponding to the picture space 23 of the standard film 20, vertically cut in half, affording the paired images 25 and 26. If now, the two images of each pair are simultaneously exposed with the use of interposed color screens, red and green, the positive therefrom may be projected in pairs by the use of similar screens, and the original colors reproduced without the objectionable flashes of color before referred to. This embodiment, however, is not preferred because then the picture will necessarily have greater height than width, this being objectionable for the reasons noted. In the preferred embodiment hereof the pictures are exposed so as to give the result shown in Fig. 3, either by turning the camera from vertical to horizontal position or applying the quarter revolution optical instrument hereinafter to be more fully described.

In Fig. 3 the film 27 has in each picture space the paired images 28 and 29 separated now horizontally by the same division line which vertically cuts the picture space in Fig. 2.

This system would be satisfactory excepting that passing the film 27 through the ordinary commercial motion picture projecting apparatus will cause a reproduction of the pictures at right angles to the normal attitude, as seen in Fig. 4.

In the preferred embodiment hereof it is proposed to run the film 27 through the projecting apparatus as shown in Fig. 4 and to employ in connection therewith one or more quarter revolution optical instruments so that the paired images are rotated from their edgewise position of Fig. 4 to their proper horizontal position.

Diagrammatically Fig. 5 shows one mode in which the pictures may be taken. The camera may be supposed to be turned horizontally so that the diagram constitutes a sort of vertical section. Many details of form, construction, support of elements and driving connection are omitted as being well understood and unnecessary to the disclosure of the present invention. The film 27 is arranged to have a series of paired images exposed thereon, the upper image at 28 and the lower image at 29 in accordance with Fig. 3 or 4. The film is conventionally shown inclosed in the rear part of a chamber 30 which has a front aperture giving a single view point for the two images. Any convenient driving mechanism, indicated at 31, may be employed for advancing the film, for example, in the usual step by step manner; and a revolving shutter device 32 may be located at a suitable point for alternately exposing the film 20 and protecting it from light. It will be understood that the devices 31, 32 will be properly synchronized by being driven by the same mechanism and these devices may conventionally represent the film feeding and shutter devices, either for taking or exhibiting.

In order that the light rays entering the camera front may be caused to produce images simultaneously in pairs upon the film, the following optical arrangement may, for convenience, be employed. The matched lenses 33 and 34 may be variously located, for example, as shown. When a single view point is desired the following optical displacement devices may be provided in front of the lenses. The entering light first strikes a transparent reflector 35 consisting of a sheet of plate glass. This is set at an incline and reflects part of the light rays to the silvered mirror 36 which restores the direction of the light, turning it to the lens 34. The light passing through the transparent reflector strikes a silvered reflector 37 inclined differently to the transparent reflector thus diverting the light rays in a different direction to where they encounter another silvered reflector 38 which restores the direction of the rays, reflecting them to the lens 33.

When the commercial form of film is em-

ployed the following optical displacement devices may be employed between the lenses and film. From the lens 33 the light is doubly reflected by mirrors 39, 40 to the portion 28 of the film while a similar pair of mirrors 41, 42 displace the other image to the film portion 29.

Each pair of reflectors 35, 36, or 37, 38, or 39, 40, or 41, 42, may be termed an optical displacement device, working by double reflection to laterally displace a light ray without changing its direction. Sometimes another form of optical displacement device could be employed, for example, a rhomboidal prism substituted for either pair of mirrors would give the same result.

The importance in employing the double reflecting displacement devices is that that makes ample room for using the large size lenses which are essential in the motion picture art. A pair of suitably mounted and laterally adjustable lenses, each as small as the actual film image, would be unsatisfactory for taking or projecting the pictures. In some cases the light rays to or from one of the paired images might pass directly to one lens without displacement, the displacement of the other giving sufficient lens separation for the stated purposes.

The color selecting instruments, namely, the red glass 43 and the green glass 44 may be interposed at any desired point in the light paths, for example, between each lens and film as shown. The transparent reflector 35 might be of red glass, thus dispensing with the glass 43.

The described apparatus when operated as a camera exposes the film 27 so as to give a series of exposures, each consisting of the paired images 28 and 29. These are simultaneously exposed and therefore represent the same positions or postures of the subjects. Image 28 represents the red and image 29 the green components of the subject and it is only necessary, in afterward projecting the pictures, to cause them to combine upon the screen, with red and green glasses respectively interposed, with provision for causing the pictures to stand horizontally or flatwise rather than edgewise on the curtain.

The preferred provision for giving the quarter revolution to the images is the optical device 50. This is indicated in Fig. 5ª as located in front of the apparatus of Fig. 5. When so located the apparatus of Fig. 5 might be used for taking the pictures without setting it horizontally, and substantially the same optical arrangement might be employed for projecting pictures, with, of course, a source of light behind the film.

Figs. 5 and 5ª to this extent illustrate the principles of the projecting apparatus. The artificial light from the rear passes through the two images 28, 29, forming two light beams which are laterally displaced and pass through the colored glasses and lenses respectively, being thereafter recombined, thence passing out of the camera through the aperture of the shutter and becoming, on passing through the instrument 50, rotated a quarter revolution so as to restore the images to their proper flatwise posture.

The quarter revolution optical instrument 50 might take different forms but preferably consists of three reflecting surfaces inclined in different directions at 45° to the light path. Fig. 5ª shows it in side elevation and Fig. 6 in rear view as consisting of a complex prism which is better shown in perspective in Fig. 7. In Fig. 6 the effect of the prism is indicated. The true or flatwise image or subject shown dotted in the upper part is quarter revolved to appear in the edgewise position as seen in the lower part.

Fig. 7 shows the preferred structure and operation of the image revolving instrument in detail. In effect it consists of three triangular prisms having a certain relative position, and they may be in actual contact and united, with their inclined sides differently aranged, as shown. What may be termed the first prism 51 has a transmitting side 52 beneath and an inclined reflecting side 53 above. The second triangular prism 54 has its reflecting side 55 farthest from the observer and two transmitting sides which meet with corresponding sides of the first prism 51 and the third prism 56. The third prism has reflecting side 57 and transmitting or exit surface 58.

The light rays may travel as follows: A horizontal object, such as arrow 60, may be supposed to send rays vertically. These enter the bottom side 52 of the prism at the point 61 and the beam of light travels through the prism to where it strikes the reflecting surface 53 at 62. This horizontally reflects the beam giving the image a quarter turn. At 63 the light rays are indicated in their passage from the first prism 51 to the second prism 54. Continuing their horizontal travel they meet the reflecting surface 55 of the second prism at the point 64, whence they are reflected without turning. As it passes from the prism 54 to prism 56 the image stands at 65 and continuing the horizontal travel strikes the reflecting surface 57 at the point 66 where the image is reflected upward with a quarter turn, taking its exit from the prism at the point 67 and passing to the point 68, for example, where the object is seen to be horizontal as originally but in a position revolved a quarter turn with respect to the original position.

While a single such quarter revolution optical instrument might be provided in front of the two lenses 33, 34, for example,

in the location shown in Figs. 5 and 5[a], obviously there may be a pair of such instruments, one for each lens, and suitably located with respect to the lens, preferably within the apparatus. One or more particular arrangements will be hereafter described involving maximum efficiency and compactness.

In any arrangement of the quarter revolution optical instrument the two lenses may be respectively adjustable laterally of the light path so as to permit suitable relative displacement upon the curtain of one of the paired projected images with respect to the other so as to initially superimpose them in exact registry. Such relative adjustment is not herein claimed, being shown for example in my co-pending application, Serial No. 781,319, filed July 26, 1913. This manner of blending the paired images on the curtain is found to be satisfactory, but no claim thereto is made herein and other equivalent expedients might be employed for the purpose.

The diagonal surfaces 53, 55 and 57, which are lined in the diagram, may be silvered to increase the reflecting power. In fact three separate mirrors correspondingly inclined might be employed in lieu of the prisms.

When a pair of the quarter revolution instruments is employed, one for each image, they may be arranged relatively to the film images substantially as shown at 50[a] and 50[b] in Fig. 8.

An additional advantage in the use of a pair of these instruments will now be seen in that they effect not only the quarter revolution of the images, but also a lateral displacement thereof so that the means previously suggested for lateral displacement within the camera may be dispensed with. Thus more particularly the pair of reflectors 39—40 and the other pair 41—42 directly in front of the film may be dispensed with. The quarter revolution instruments substituted for them give the necessary displacement. This latter arrangement is diagrammatically shown in Fig. 9 in which, in other respects, the optical arrangements may be as in Fig. 5. Assuming the apparatus used for taking pictures, and the diagram a top plan, the film 27 travels downward and has in front of it the pair of quarter revolution instruments 50[a] and 50[b], the color screens 43 and 44, the lenses 33 and 34, and the displacement devices 35—36, and 37—38.

The axial light ray, shown in broken lines, enters the camera centrally in front, is separated in two portions by the transparent reflector 35, one portion being displaced to mirror 36, thence through lens 34, screen 44 and instrument 50[a] which gives it a quarter turn and displaces it toward the axis giving an edgewise image; while the remainder of the light passing through reflector 35 is displaced from the axis by mirror 37, thence deflected by mirror 38 through lens 33, screen 43 and instrument 50[b] which revolves and displaces it toward the axis giving image 28; the resulting film when developed and converged into a positive having the appearance as in Fig. 8.

Fig. 10 shows the same principle reversed for exhibiting or projecting. Parallel light rays, for example, from an artificial light may be projected from the rear through the film 27. The light beams passing through images 28 and 29 respectively are displaced from the axis of the instrument and at the same time given a quarter revolution, by the instruments 50[a] and 50[b], the beams passing thence through the lenses 33 and 34 and thence to the curtain on which the pictures are exhibited. The displacement devices in front of the lenses are dispensed with since preferably superposing of the images to cause them to coalesce and blend is effected without further reflection, but rather by a micrometer adjusting means such as diagrammatically illustrated at 70 for relatively laterally adjusting one or both of the lenses.

In this modification of Fig. 10 also the instruments 50[a] and 50[b] may be considered as colored or having color screens embodied with them so that the separate color screens 43 and 44 are omitted. Obviously the quarter revolution optical instrument 50 may have its three component prisms either attached in contact or formed integrally, or in some cases they might be separated by a space in which space a color screen or lens or other device might be interposed, without altering the principles of operation of the instrument.

In Fig. 11 the relative arrangement of the two instruments 50[c] and 50[d] is altered, they being nested together in a manner affording great compactness, solidity and protection. The film produced or exhibited by this arrangement of instruments is indicated in Fig. 11 as identical with that shown in Fig. 4.

Whatever the relative arrangement is between the two instruments or their position with relation to the film, screens and lenses, a frame 69, Fig. 12, may be employed within which the instruments are secured, the frame being provided with proper apertures 69[a] at two points in the front and two points in the rear to permit the entrance and exit of the light beams.

For the purposes of description it may be considered that the images 28, 29, shown in Figs. 4, 8 and 11, are edgewise as distinguished from having their true position indicated in Figs. 1, 2 and 3. It may also be considered that the paired images 25 and 26, or 28 and 29, seen in Figs. 2, 3, 4, 8 and 11,

are in transverse alinement or edge to edge across the film as distinguished from being in longitudinal alinement as are each two successive images in Fig. 1. Also each image 28 or 29 in Figs. 3, 4, 8 or 11 may be considered as flatwise, as distinguished from crosswise, with respect to the film's length, so that with the film standing vertically the pictures are edgewise as distinguished from having their true position as seen in Figs. 1 and 2. Also, each separate picture or image seen in Figs. 2, 3, 4, 8 and 11 may be considered as having a longitudinally oblong shape as distinguished from a transversely oblong shape as in Fig. 1. Furthermore, each separate image 25 or 26, or 28, or 29, in Figs. 2, 3, 4, 8 and 11 may be considered not only as longitudinally oblong in shape, but as constituting one half of a picture space which, as seen in Fig. 1, is transversely oblong in shape. By this latter feature the ordinary transversely oblong picture space 23, as customarily used commercially, may be divided longitudinally in half to give the paired images spaces, each longitudinally oblong but capable, by a quarter revolution, of being restored to true position in exhibiting, when run in the ordinary manner.

As before stated it is preferred that the two or more color selection images represent simultaneous exposures and for convenience they may then be termed simultaneous color-selection images.

The quarter revolution optical instrument hereof might be variously employed otherwise than as specifically shown. Indeed, it would often have utility whether or not the images were simultaneously exposed and whether or not the element of color enters into the system for example, paired stereoscopic pictures might be treated in this way; and indeed, the device would have a certain utility in non-moving pictures.

Instead of a plain sheet of glass 35 for a reflector, a thinly silvered or platinized plate of glass may be employed to give an increase in the reflected component of the light or the compound prism shown in U. S. Patent No. 703,929, of July 1st, 1902.

Or, the plain transparent reflector 35 and the two color screens 43 and 44 may be done away with and a saving in light effected by employing what shall herein be termed a color-selective transparent reflector, or dichroic reflector, arranged in the position of the clear reflector 35 of Figs. 5 or 9. As this dichroic reflector possesses utility otherwise than in connection with the quarter revolution optical instrument hereof, the same is not claimed herein, but made the subject of a separate application. Briefly the dichroic reflector may be described as one adapted to reflect a preponderance of light of one color and transmit a preponderance of light of the complementary color so that, for example, the green component of the beam of light may be reflected and the orange or red transmitted. Such a reflector may be obtained in different ways, for example, by flowing a perfectly clean, plane glass with an alcoholic solution of an alkali coal-tar dye, such as eosine, and letting it drain and dry. This reflects light like a polished green-yellow metal, with relative excess of green light, and transmits much more than half of the incident red light. This reduces the necessary time of exposure in the camera very materially and thereby the range of subjects available to the apparatus is increased.

What may be frequently employed as a valuable adjunct especially in the described picture taking apparatus or in analogous situations, is the limiting diaphragm device shown in Fig. 13, the principles of which may be explained as follows.

The normal camera aperture 70 will be of such size as to permit what may be termed the normal cone of light rays to enter the camera and pass to or through the respective optical instruments. This normal cone is indicated at 71 and the normal field of vision will be within the limits of that cone. Only subjects within that field would make their impress on the film but for the phenomenon now to be described. Owing to the employment in connection with the interior lens or lenses, which are of relatively large size in motion picture apparatus, of lateral displacement devices for shifting the axis of the light beam to one side or the other, it is possible for light rays from objects outside the normal field to gain access to the film. Thus at 72 are indicated a number of undesirable or foreign light rays able to pass, not by the regular route, but more directly to the lenses or to the image revolving devices so that images or fragments of images of objects outside the normal field will be superimposed, usually out of focus, upon the normal or true image, thus producing confusion. The purpose of this part of the invention is to cut off all such foreign light rays while permitting free access of the normal cone of rays to the apparatus. Assuming now, that the foreign light rays 72 are as indicated on the diagram, a point may be selected quite a distance in advance of the normal aperture 70 where a limiting diaphragm 73 may be located, coincident with the normal cone and excluding the abnormal rays. The limiting diaphragm may consist of a simple square frame 73 of the proper size and location suitably connected, for example, by a bellows 74, with the camera with adjustment, if desired, of size and position to adapt the camera to various uses. The limiting diaphragm will usually be from 12 to 20 inches or farther in front of the camera box 30. It is to be understood that not only may the limiting diaphragm 73 be employed

in any of the modifications hereof but also that a lateral partition 75 may be provided in the camera at the lens position so that no improper light rays may pass toward the film 27 outside of the lenses.

It will thus be seen that a system or method and apparatus has been described embodying the principles and attaining the objects and advantages hereof, and other advantages will be apparent to those skilled in the art. Since many matters of design, arrangement, combination, detail and other features may be variously modified without departing from the principles or sacrificing the advantages hereof, no limitation to such features is intended excepting so far as specified in the appended claims.

What is claimed is:

1. A color motion picture exhibiting apparatus adapted to exhibit a traveling film carrying color selection images in simultaneously exposed sets, each set having its images arranged in transverse alinement and each image arranged flatwise of the film's length; said apparatus comprising in combination means for causing the film to travel vertically endwise, means for passing light through the images and selectively coloring the light, means for relatively shifting the two projected images to cause them to blend, and optical means increasing the spacing between the images and revolving the beam of light a quarter revolution so that the exhibited picture will be seen in natural position.

2. A color-motion-picture taking (or exhibiting) apparatus comprising in combination, means for supporting and advancing a traveling ribbon of film, and optical means located in front of the film position adapted to produce (or blend) a plurality of simultaneous color-selection images on the film, said optical means including a plurality of lenses, and a plurality of image-revolving instruments for changing the spacing between the images and revolving each image between edgewise position and true position.

3. A color-motion-picture taking (or exhibiting) apparatus comprising in combination, means for supporting and advancing a traveling ribbon of film, and optical means located in front of the film position adapted to produce (or blend) a plurality of simultaneous color-selection images on the film, said optical means including a plurality of lenses, and a plurality of image-revolving instruments for changing each image between edgewise position and true position, each of said instruments comprising three reflecting surfaces whereby it acts to maintain the general direction of projection of the light beam.

4. A color-motion-picture taking (or exhibiting) apparatus comprising in combination, means for supporting and advancing a traveling ribbon of film, and optical means located in front of the film position adapted to produce (or blend) a plurality of simultaneous color-selection images on the film, said optical means including a plurality of lenses spaced apart wider than the film images, and a plurality of image-revolving instruments between the respective lenses and the film for displacing the images and for changing each image between edgewise position and true position.

5. A color-motion-picture apparatus comprising in combination, a traveling ribbon of film having a series of sets of simultaneous color-selection images thereon in edgewise position, the images in each set being in transverse alinement on the film, means for advancing said film between exposures, and optical means in front of the film, including a plurality of image displacing and revolving means, for changing the spacing between the images and revolving the images from edgewise to true position and blending them.

6. A color-motion-picture apparatus comprising in combination, a vertically traveling ribbon of film having a series of sets of simultaneous color-selection images set flatwise thereon in edgewise position, the images in each set being in transverse alinement on the film, and each image having a longitudinally oblong shape, means for advancing said film vertically between exposures, and optical means in front of the film, including a plurality of image displacing and revolving means, for changing the spacing between the images and revolving the images from edgewise to true position and blending them.

7. A color-motion-picture apparatus comprising in combination, a vertically traveling ribbon of film having a series of sets of simultaneous color-selection images set flatwise thereon in edgewise position, the images in each set being in transverse alinement on the film, and each image having a longitudinally oblong shape, being half of a transversely oblong space on the film, means for advancing said film vertically between exposures, and optical means in front of the film, including a plurality of image displacing and revolving means, for changing the spacing between the images and revolving the images from edgewise to true position and blending them.

8. A color-motion-picture taking (or exhibiting) apparatus for traveling films having a series of sets of image spaces, the said apparatus having means for so advancing the film that the images stand edgewise, and optical means in front of the film position having associated with it an image-revolving means adapted to act upon the transmitted light having a given (horizontal) axis, and comprising a first reflector arranged in the light path to bend the light axis substan-

tially at a right angle to its original horizontal forward direction and thereby into a substantially vertical plane standing at right angles to the original axis, a second reflector arranged to next bend the axis again substantially at a right angle but substantially within the same vertical plane with the first reflected direction, and a third reflector arranged to next bend the axis again substantially at a right angle, this time horizontally forward, by which image-revolving means the images are revolved between edgewise and true position, while the general direction of projection is preserved.

9. A color photograph taking (or exhibiting) apparatus for producing or blending a pair of images, the said apparatus having optical means comprising a first reflector arranged in the light path to bend the light axis substantially at a right angle to its original horizontal forward direction and thereby into a substantially vertical plane standing at right angles to the original axis, a second reflector arranged to next bend the axis again substantially at a right angle but substantially within the same vertical plane with the first reflected direction, and a third reflector arranged to next bend the axis again substantially at a right angle, this time horizontally forward, by which image-revolving means the images are revolved between edgewise and true position, while the general direction of projection is preserved.

10. A picture taking (or exhibiting) apparatus having in association with the lens, an image-revolving means comprising a first reflector arranged in the light path to bend the light axis substantially at a right angle to its original horizontal forward direction and thereby into a substantially vertical plane standing at right angles to the original axis, a second reflector arranged to next bend the axis again substantially at a right angle but substantially within the same vertical plane with the first reflected direction, and a third reflector arranged to next bend the axis again substantially at a right angle, this time horizontally forward, by which image-revolving means the images are revolved between edgewise and true position, while the general direction of projection is preserved.

11. For picture taking or projecting purposes, an image-revolving means adapted to act upon a bundle of light rays having, for example, an original horizontal axis, comprising a first reflector arranged in the light path to bend the light axis substantially at a right angle to its original horizontal forward direction and thereby into a substantially vertical plane standing at right angles to the original axis, a second reflector arranged to next bend the axis again substantially at a right angle but substantially within the same vertical plane with the first reflected direction, and a third reflector arranged to next bend the axis again substantially at a right angle, this time horizontally forward, by which such three reflections the original general direction of projection is maintained but each image is revolved substantially a quarter turn from its original position.

12. A color-motion picture projecting apparatus for a traveling film having a series of pairs of simultaneous color-selection images arranged flatwise of the length of the film, the said apparatus having means for vertically advancing the film whereby each image stands edgewise, and optical means in front of the film position having in association with the lens an image-revolving means comprising a first reflector arranged in the light path to bend the light axis substantially at a right angle to its original horizontal forward direction and thereby into a substantially vertical plane standing at right angles to the original axis, a second reflector arranged to next bend the axis again substantially at a right angle but substantially within the same vertical plane with the first reflected direction, and a third reflector arranged to next bend the axis again substantially at a right angle, this time horizontally forward, whereby the images are revolved a quarter turn in projection to change them from edgewise to upright position.

In testimony whereof I affix my signature in presence of two witnesses.

FREDERIC E. IVES.

Witnesses:
DONALD CAMPBELL,
WM. J. DOLAN.