June 11, 1963 D. C. FREEMAN, JR., ET AL 3,093,197

METHOD AND APPARATUS FOR THERMALLY WORKING MINERALS AND MINERAL-LIKE MATERIALS

Filed Dec. 9, 1958 2 Sheets-Sheet 1

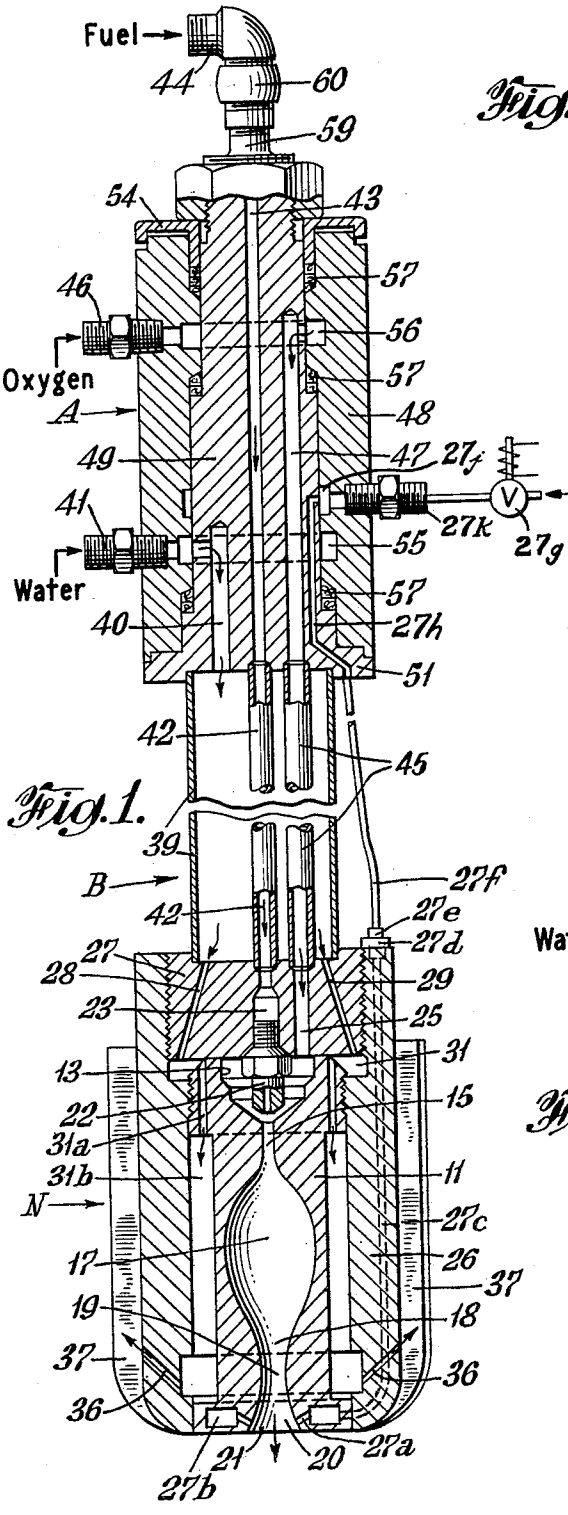

Fig. 1.

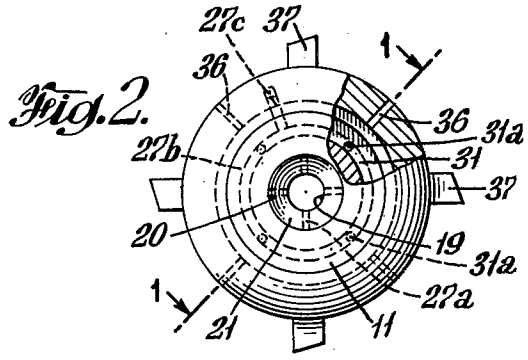

Fig. 2.

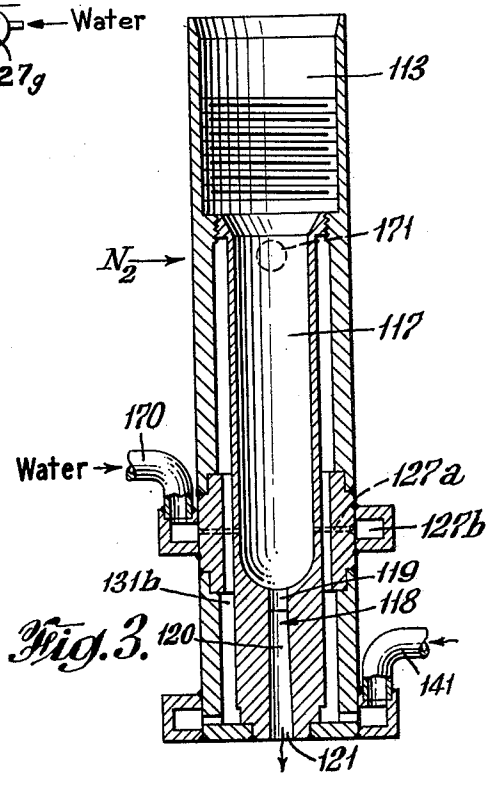

Fig. 3.

INVENTORS
DONALD C. FREEMAN, JR.
JOSEPH A. SAWDYE

BY William F. Messinger
ATTORNEY

June 11, 1963 D. C. FREEMAN, JR., ET AL 3,093,197

METHOD AND APPARATUS FOR THERMALLY WORKING MINERALS AND MINERAL-LIKE MATERIALS

Filed Dec. 9, 1958 2 Sheets-Sheet 2

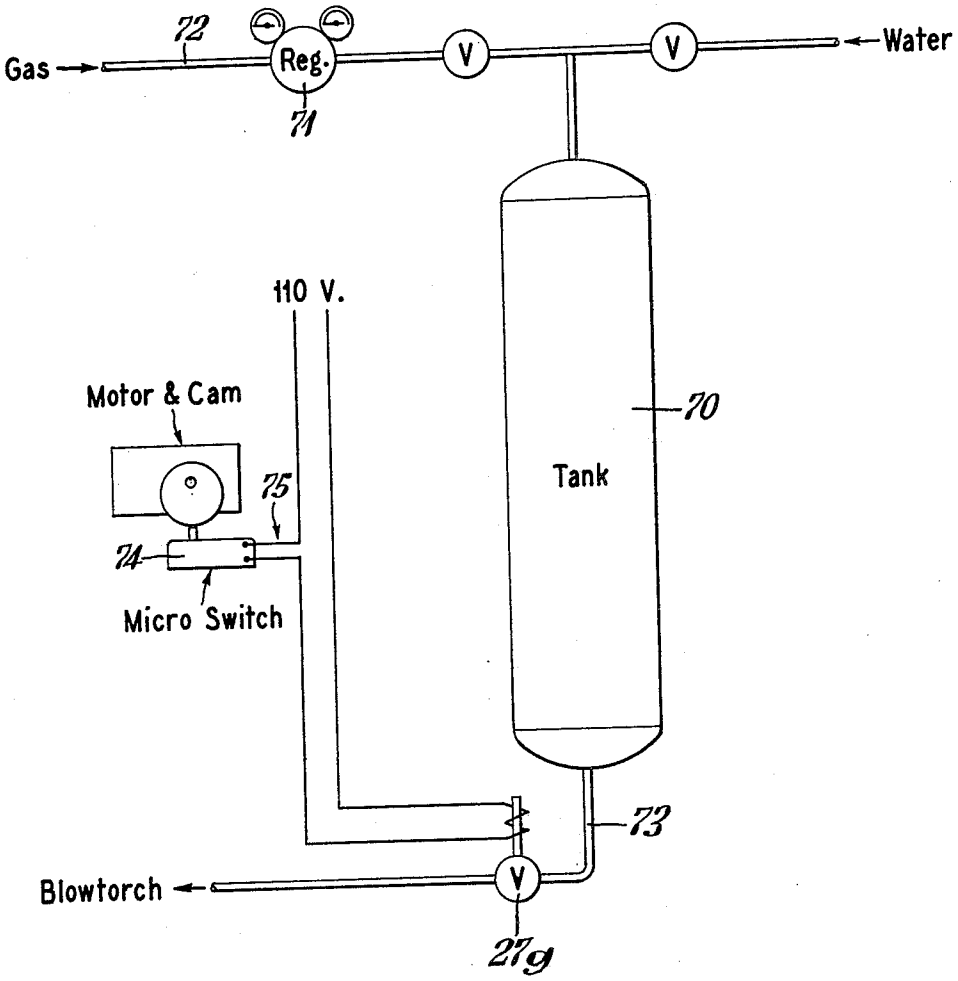

Fig. 4.

INVENTORS
DONALD C. FREEMAN, JR.
JOSEPH A. SAWDYE

BY William A. Messinger
ATTORNEY

United States Patent Office 3,093,197 Patented June 11, 1963

3,093,197

METHOD AND APPARATUS FOR THERMALLY WORKING MINERALS AND MINERAL-LIKE MATERIALS

Donald C. Freeman, Jr., Durham, N.C., and Joseph A. Sawdye, North Tonawanda, N.Y., assignors to Union Carbide Corporation, a corporation of New York

Filed Dec. 9, 1958, Ser. No. 779,102
8 Claims. (Cl. 175—14)

This invention relates to a novel method of and apparatus for thermally working a mass of mineral or mineral-like material, and more particularly to thermally working difficultly spallable rock by the impingement of a high velocity jet flame.

Previously, minerals and mineral-like substances have been thermally worked or pierced by applying a high velocity jet flame to localized areas and progressively advancing the heat into the substance to heat the freshly exposed area as separated material is progressively removed by a stream of hot gases. Thermal working of rock proceeds by either of two methods, a spalling process or a melting process, depending on the substance to be worked. Materials having relatively high melting points, large grain structure and few extraneous material inclusions, such as quartzite, dolomite, quartz or chert, are easily spalled. However, there are other materials which tend to melt instead of spall when subjected to intense heat, and thus may be termed difficultly spallable. Rocks falling into this category include certain kinds of granite, taconite, and anorthosite. It should also be recognized that some rocks include both types of material, e.g. seams of difficultly spallable material distributed in the body of easily spallable rock. Easily spallable materials can be readily separated from the base rock and removed from the hole by hot gases by the aforementioned method which is described in more detail in U.S. Patent No. 2,675,993 to G. H. Smith and W. J. Mitchell. However, a serious problem is encountered when attempting to utilize this method for the thermal working of difficultly spallable materials. It has been found that when a jet flame is directed at one point on a rock for more than a few seconds, areas of melt are formed. In easily spallable rocks, the area of melt is small, but in difficultly spallable rocks the entire surface under the flame may melt. This presents a severe limitation for the known thermal working methods because the melt areas form a heat resistant layer which tends to remain on the rock surface as an insulator and retards further piercing.

It should also be recognized that adjacently located rock beds may contain material having varying degrees of spallability, so that any method and apparatus for thermally working difficultly spallable material should be readily adaptable for piercing easily spallable rock. Furthermore, it will be appreciated that a large quantity of equipment is presently being used for thermally working easily spallable material, and such equipment should be employed in any improved method for working difficultly spallable material to maximize operating efficiency and minimize additional investment costs.

It is, therefore, the main object of the present invention to provide an improved method of and apparatus for thermally working mineral bodies which are difficult to pierce by a thermal spalling action.

Another object of the invention is to provide a rock working blowtorch which is suitable for piercing both easily and difficultly spallable materials.

Still another object of the invention is to provide a means for readily adapting existing blowtorches for the working of difficultly spallable materials.

Other aims and advantages of the present invention

will be apparent from the ensuing description and appended claims.

In the drawings:

FIG. 1 is a view of a longitudinal section of a novel blowtorch for performing a method embodiment of the invention, taken along the line 1—1 in FIG. 2;

FIG. 2 is a view of the end of the blowpipe of FIG. 1 as seen from the bottom; and

FIG. 3 is a view of a longitudinal fragment section of an alternative form of a blowpipe within the invention; and

FIGURE 4 is a schematic diagram of a typical water injection system.

According to a method embodiment of the present invention, material is separated from a mass of difficultly spallable rock by applying an alternately hot and cool high velocity jet flame of combustion gases against such mass. The particles which are initially melted and fused by the hot flame are rapidly quenched by the succeeding relatively cool flame and broken off for removal by hot gases before they can spread into relatively large areas of melt and form insulating layers which are difficult to pierce. Thus, spalling may be resumed immediately between the coolant injections.

In a preferred embodiment, an oxidizing agent and fuel are introduced into an enclosed combustion zone of a burner and burned therein to form combustion gases. A coolant such as water is intermittently injected into the combustion zone to cool the combustion gases. The resulting alternately hot and cool combustion gases are discharged from the combustion zone first through a flow restriction zone and then through an expansion zone as a high velocity jet flame. The alternately hot and cool jet flame is then impinged against the rock mass to separate material therefrom and rapidly quench the initially molten particles thereby substantially preventing the formation of difficultly workable melt zones. The separated material is removed from the mass at least partially by said coolant, which in the case of water is in the form of ejecting steam. The burner is then advanced along a selected path to separate and remove additional material from the mass along such path. Alternatively, the coolant may be injected into the high velocity jet flame downstream of the combustion zone although injection directly into such zone is preferred from the standpoint of piercing efficiency. The temperature of the hot combustion gas jet is preferably at least about 4,000° F. and the temperature of the cool combustion gas jet is preferably between about 100° and 900° F. Also, the jet flame impinging against the rock mass preferably has a velocity of at least about 2,500 feet per second so as to obtain the preferred jet piercing action.

Referring now to the drawings and particularly to FIGS. 1 and 2, one novel internal combustion blowtorch B suitable for performing the method of the invention comprises a burner nozzle N including a core **11** having a large diameter oxidizing agent inlet bore **13** in its upper end tapering gradually downward to a restricted central injector throat **15** which forms an entrance into a relatively large bulbous combustion chamber **17**. The walls of combustion chamber **17** in turn converge downwardly to a discharge path **18** comprising a throat section **19** remote from throat **15** and an expansion section **20** flaring downwardly from throat section **19** without restriction to a discharge orifice or exit **21** in the lower end of the nozzle.

Fuel, such as relatively inexpensive kerosene, is injected at a positive pressure greater than 15 pounds per square inch through the first throat **15** into the combustion chamber **17** by an injector nozzle **22** which is threaded into a fuel supply duct **23** in an adaptor body **27** and projects into the inlet bore **13** in axial alignment

with throat 15 and combustion chamber 17. An oxidizing agent such as gaseous oxygen is concurrently but separately delivered at a positive pressure greater than 15 pounds per square inch to the inlet bore 13 through an eccentrically arranged oxidizing agent supply duct 25 in adaptor 27. The fuel and oxidizing agent mix intimately together in passing through throat 15, and the mixture burns vigorously in chamber 17 at a combustion pressure greater than 15 pounds per square inch, producing large volumes of flaming combustion gases which rush at high velocity through the discharge throat section 19 and the flaring expansion section 20 to provide an axially directed flame jet having a jet linear velocity of at least about 2,500 feet per second. The high velocity flame jet passing through flaring expansion section 20 and emanating from exit 21 is intermittently cooled by jets of a coolant such as water which are injected into the flame through downwardly inclining ducts 27*a* circumferentially located around the lower end nozzle core 11. The injected water is flashed to steam and aids in the ejection of separated material from the working zone in addition to its primary function of intermittently cooling the flame jet discharged through nozzle exit 21. Ducts 27*a* are fed through annular ring-like chamber 27*b* which in turn communicates with coolant passageway 27*c* extending through substantially the entire length of sleeve 26. Coolant passageway 27*c* terminates at its upper end in a nipple 27*d* which is coupled to a conventional swing joint 27*e*. Connected to the swing joint 27*e* is a conduit 27*f* which communicates with passage 27*h* in core 49. Water is supplied from an injection system (see FIGURE 4) to the passage 27*h* by including an annular chamber 27*j* as a portion of the passage 27*h* between the core 49 and the barrel 48 so that the portion of the passage 27*h* in the core and chamber 27*j* in the barrel are always in register as the core rotates. Coupling 27*k* connects annular chamber 27*j* with a conduit 27*m* which contains means for providing pulses of water therethrough, such means being for example a solenoid valve 27*g*. The operation of this valve will be well understood by those skilled in the art, and may for example be controlled by a cam-operated switch (see FIGURE 4) providing a very short, square-wave pulse of water into the flame jet. The injected water may for example be pressurized with a mechanical pump, by means of gas pressure in a water reservoir tank, or by other convenient means. The quantity of water injected per cycle can for example be adjusted by altering the pressure on the water injection system above the pressure of the jet flame.

Referring to FIGURE 4, a tank 70 containing water to be injected is pressurized by means of a gas supplied through conduit 72 to the tank 70. Regulator 71 positioned in conduit 72 controls the pressure in the tank 70. Solenoid valve 27*g* is connected in the outlet conduit 73 from the tank 70. The valve 27*g* is controlled by a cam-operated switch 74 which makes and breaks the circuit 75 to the solenoid valve 27*g* to open and close such valve and thereby produces the pulse of water injected.

The flame will continue to burn even when plunged into water as in a flooded hole. Also, the nozzle of the preferred internal combustion burner of the present invention is less subject to functional damage by flying detritus and by impacting against the bottom of a pierced hole than are external combustion burners.

More in detail, core 11 of burner nozzle N is threaded into a tightly fitting disintegrator sleeve 26 which terminates at its lower end with the lower end of the core 11. At its upper end, sleeve 26 projects beyond core 11 and is threaded over adaptor body 27 to hold the upper end of the core tightly against the lower face of the adaptor body with a fluid-tight seal in such a position that injector nozzle 22 and oxidizing agent duct 25 are both in register with the bore 13.

The nozzle N is cooled by water or other fluid coolant supplied through a pair of ducts 28 and 29 in adaptor body 27 to an annular header chamber 31 bounded by a ridged inner wall section of sleeve 26 and the inwardly beveled top outer portion of core 11. A series of circumferentially arranged vertical ducts 31*a* through the enlarged upper section of core 11 pass the water to an annular cooling jacket 31*b* bounded by the inner wall of sleeve 26 and the outer wall of the lower section of core 11. Water leaves the nozzle through a group of circumferentially arranged upwardly and outwardly inclined ports 36 establishing communication between the nozzle cooling jacket 31*b* and the outer surface of the sleeve 26 close to the lower end of the nozzl N. The water discharged through ports 36 aids in cooling the slag for disintegration by physical impact. Steam formed by contact of the hot material helps the gaseous products of combustion to eject detritus from the hole. In the case of small diameter burners, a portion of the cooling water must be piped back up the burner and not passed into the hole. This is because the minimum required water flow for cooling is too great to be blown out of the hole by the combustion gases.

For assisting the piercing of a hole, as by breaking up any cooled slag by physical impact therewith and as by reaming the wall of the hole, radial teeth 37 extend longitudinally along the outside of sleeve 26 to its lower end. Several of the water discharge ports 36 are preferably positioned between each pair of teeth.

Water is supplied to the ducts 28 and 29 in adaptor 27 through a long sleeve 39 acting as a torque tube secured at its lower end to adaptor body 27, and at its upper end to an upper body A having a passageway 40 establishing communication between the interior of sleeve 39 and a hose connection nipple 41.

Kerosene or other fluid fuel is supplied to duct 23 through a tube 42 which extends through sleeve 39 and is secured at its ends to the adaptor body 27 and the upper body A. A passageway 43 extends between tube 42 and a hose connection nipple 44 on body A.

Oxygen passes to duct 25 through a second tube 45 arranged within sleeve 39 alongside of tube 42 and secured at its ends to the adaptor body 27 and the body A. A passageway 47 in body A carries oxygen to tube 45 from a hose connection nipple 46.

When piercing difficultly spallable rock by an alternately hot and cool jet of combustion gases emanating from nozzle N, quenching the initially molten particles by the cool jet and preferably also by water from ports 36, and disintegrating the quenched material mechanically by physical impact with teeth 37, it may be advantageous to rotate the teeth automatically as the burner advances to form successive portions of the hole. For this purpose, the upper body A is constructed with an external non-rotating barrel 48, and a core 49 is journalled within barrel 48 for rotation therein. It is to the lower end of core 49 that the sleeve 39 and tubes 42 and 45 are secured, so that they and the burner nozzle N all rotate with the core. Core 49 is held in barrel 48 by a flange 51 on its lower end and bearing against a plate 54 on the top of the barrel.

Water is continuously supplied to sleeve 39 during its rotation by including an annular chamber 55 as a part of passage 40 between the core 49 and the barrel 48 so that the portions of the passage 40 in the core and chamber 55 in the barrel are always in register as the core rotates. An identical construction using an annular passage 56 is employed for the passage 47 which supplies oxygen to tube 45 as the core rotates. Packings 57 of conventional design are provided between the core 49 and barrel 48 above and below the registering portions of passages 40 and 47 to prevent leakage.

Fuel passage 43 terminates at its upper end in a nipple 59 which is coupled to a conventional swing joint 60 designed to permit nipple 59 to rotate while kerosene is supplied continuously without leakage from the non-rotating hose connecting nipple 44.

One important advantage of the various blowtorch embodiments of the present invention is that they are suitable for thermally working both easily and difficultly spallable materials. For example, the blowtorch of FIGS. 1 and 2 having been used for thermally working difficultly spallable material may be moved to a different rock bed for thermally working material which can be easily spalled without the aid of intermittent coolant injection. Thus, by simply closing solenoid valve **27***g*, the blowtorch of the present invention may be readily used for thermal working easily spallable material. Furthermore, it should be recognized that the spalling efficiency of some easily spallable material may be improved by intermittent coolant injection.

In a modified type of burner nozzle N_2 shown in FIG. 3, the oxidizing agent and fuel are introduced through bore **113** into cylindrical combustion chamber **117** for mixing and burning therein to form combustion gases. Such gases are periodically cooled by a coolant stream injected into chamber **117** through horizontal ducts **127***a* circumferentially located around the nozzle periphery. The ducts are fed by an annular cooling chamber **127***b* secured to the outer walls of nozzle N_2 near the lower end thereof, and such chamber is in turn charged with coolant through opening **170**. An injection system similar to that shown in FIGURE 4 is connected to nozzle N_2 through opening **170**. It has been found that satisfactory results are obtained when water coolant is injected into the combustion zone **117** at a frequency of between about 10 and 150 pulses per minute, and preferably between about 80 and 110 pulses per minute. If the coolant injection rate is below the above-mentioned range, essentially no quenching action is obtained; on the other hand if the rate exceeds this range, the combustion gas effluent does not reach sufficiently high temperatures for effective heating of the mineral substance. Nozzle N_2 itself is cooled by water injected through conduit **141** for flow through annular passageways **131***b* and discharge through another conduit connected to outlet opening **171**.

The alternately hot and cool combustion gases are discharged from combustion chamber through discharge path **118** including flow restricting throat section **119** and expansion section **120** for discharge from the nozzle N_2 through exit orifice **121** as a high velocity flame jet. It is to be noted that in the nozzle N_2 of FIG. 3, the coolant is injected into the combustion chamber, whereas in the nozzle embodiment of FIGS. 1 and 2, the coolant is injected into the high velocity flame jet. The first-mentioned embodiment is preferred since it has been found that cooling of the combustion gases is more efficient and more easily controlled if effected in the combustion chamber.

Although radial teeth for reaming the walls of a hole are not illustrated in the nozzle embodiment of FIG. 3, it is to be understood that teeth similar to those shown in FIGS. 1 and 2 would be provided. It will be recognized some blowtorches for thermally working difficultly spallable material will not require radial teeth nor rotating nozzles; consequently these features are not considered essential to the present invention. For example, blowtorches used for certain jet channeling and thermal texturing operations would fall in this category.

Furthermore, it will be understood by those skilled in the art that blowtorch nozzles having multiple combustion chambers and/or multiple discharge paths may be readily used in the method and apparatus embodiments of the present invention.

In the following specific examples, the advantages of this invention for thermally working various materials are illustrated:

EXAMPLE I

A blowtorch having a nozzle similar to that illustrated in FIGS. 1 and 2 was constructed so that water could be injected into the flame jet discharge path from a one-inch diameter combustion chamber processing a combustible gas mixture of oxygen and propane at a rate of 160 cubic feet of oxygen per hour and 60 cubic feet of propane per hour. Water was injected into the flame about once per second at a rate of about two gallons per hour, and it was shown that the spalling characteristics of the flame were improved. Several shallow holes were drilled in difficultly spallable granite, and areas of melt were cooled to below incandescence almost instantaneously by the water pulse, while the spalling action resumed immediately between injections of water. The rate of piercing was higher with water injection, and the holes were free of melt areas and more uniform than when piercing was attempted without water injection.

EXAMPLE II

A blowtorch having a nozzle similar to that illustrated in FIG. 3 was constructed so that water could be injected into a combustion chamber having a volume of about 3.4 cubic inches, burning a combustible mixture of oxygen and propane at a combined rate of about 220 cubic feet per hour. Cutting of a channel in Opalescent Granite, a difficultly spallable material, was attempted without water injection but such cutting was soon stopped due to melt formation which impeded further progress. Another channel about 16 inches long, 2½ inches wide, and 2½ inches deep was made using water injection; this channel showed no signs of excessive melt formation or slower spalling until considerable penetration of the test rock and extensive cracking had occurred. Even then the formation of melt was not so severe as to prevent further channeling. During this test, water was injected into the combustion chamber at a frequency of about 80 pulses per minute in a quantity of about 2.5 gallons per hour.

EXAMPLE III

In this series of tests, the same blowtorch used in the jet channeling experiments of Example II was used for jet piercing holes in Opalescent Granite and Scotstown Granite, both materials having poor spalling characteristics. Oxygen and propane were introduced into the combustion chamber at a combined rate of about 220 cubic feet per hour. The water pressure on the injector was varied from a maxium of 240 p.s.i.g. to 112 p.s.i.g. minimum. Since the water pressure controls the actual volume of water injected, these holes compared with those made without water injection graphically demonstrate the latter's effect. In evaluating the piercing rate in a specimen, at least three holes were preferably drilled between six and fifteen inches deep. The rock removal rates (inches^3 per ft. $^3O_2$) were then determined by measuring the volume of the hole. The following results were obtained:

Rock sample	Rock removal rate (in.^{3}/ft.$^3O_2$)	Water injection pressure (p.s.i.g.)	Inj./min.
Opalescent Granite	0.225		
Do	0.188		
Do	0.863	150	100
Do	1.350	200	100
Do	0.975	240	84
Do	0.785	112	84
Do	0.831	200	84
Scotstown Granite	0.0		
Do	0.0		
Do	0.8	250	90
Do	1.4	200	90

The tabulated data indicates that water injection has a beneficial effect on difficultly spallabe rock such as Scotstown Granite and Opalescent Granite. In piercing both these stones without coolant injection, melt forms almost immediately and prevents any further progress into the stone. By using water injection, no melt is formed and upon completion of the hole the bottom is clean. The hole piercing apparently could be continued for any length of time.

Specific examples have been described above to illustrate the principles of the invention. It is to be understood that the invention is not limited to the features specifically described but that changes can be made in the construction and arrangement of parts in the blowtorches, and in the steps of the method. For example, instead of injecting a coolant into the combutsion zone (FIG. 3) or the jet flame of the burner nozzle (FIG. 1), the coolant may be injected into the jet externally from such burner nozzle.

What is claimed is:

1. A method of thermally working a mass of difficultly spallable rock which comprises introducing an oxidizing agent and fuel into an enclosed combustion zone in a burner; burning said mixture in such zone to form combustion gases; intermittently injecting a coolant into the combustion zone to cool the combustion gases; discharging the resulting alternately hot and cool combustion gases from said combustion zone first through a flow restriction zone and then through an expansion zone as high velocity jet flame; impinging the alternately hot and cool jet flame against said mass to separate material therefrom and rapidly intermittently quench the initially molten particles thereby substantially preventing the formation of difficultly workable melt zones; removing the separated material from said mass at least partially by said coolant; and advancing said burner along a selected path to separate and remove additional material from said mass along said path.

2. A method of thermally working a mass of difficultly spallable rock which comprises introducing an oxidizing agent and fuel into an enclosed combustion zone in a burner; burning said mixture in such zone to form combustion gases; discharging such gases from said combustion zone first through a flow restriction zone and then through an expansion zone as a high velocity jet flame; intermittently injecting a coolant into such jet so as to form an alternately hot and cool jet flame; impinging such jet flame of varying temperature against said mass to separate material therefrom and rapidly intermittently quench the initially molten particles thereby substantially preventing the formation of difficultly workable melt zones; removing the separated material from said mass at least partially by said coolant; and advancing said burner along a selected path to separate and remove additional material from said mass along said path.

3. A method according to claim 1 for thermally working a mass of difficultly spallable rock, in which water is said coolant and is intermittently injected into the combustion zone at a frequency of between about 10 and 150 pulses per minute.

4. A method according to claim 1 for thermally working a mass of difficultly spallable rock, in which water is said coolant and is intermittently injected into the combustion zone at a frequency of between about 80 and 110 pulses per minute.

5. In apparatus for thermally working a mass of difficultly spallable rock, a blowpipe having means for impinging high velocity jet flame against said mass, means for injecting coolant into said jet flame, and control means associated with said last-named means for providing pulses of coolant to said jet flame.

6. Apparatus as claimed in claim 5, in which said pulse providing means comprises a solenoid valve.

7. A rock working blowtorch comprising a body having a first end and a second end and having at least one inlet at said first end thereof for oxidizing agent and fuel fluids; a combustion chamber in said body for burning of such fluids to form combustion gases therein; at least one passageway for such fluids and communicating at opposite ends with the fluid inlet at the body first end and an inlet to said combustion chamber; at least one coolant passageway through the blowtorch body wall and communicating at one end with said combustion chamber, means for intermittently interrupting the flow of a fluid coolant from a supply thereof to said coolant passageway for intermittently injecting at sufficient pressure and mixing such coolant with the combustion gases in said chamber so as to intermittently cool such gases; a discharge path from the combustion chamber for emitting an alternately hot and cool high velocity jet flame from said second end of the blowtorch body, including a flow restricting throat section communicating with the combustion chamber and an exit expansion section communicating with such throat section for accelerating the alternately hot and cool combustion gas stream to form the high velocity jet discharge flame.

8. A rock working blowtorch comprising a body having a first end and a second end and having at least one inlet at said first end thereof for oxidizing agent and fuel fluids; a combustion chamber in said body for burning of such fluids to form combustion gases therein; at least one passageway for such fluids and communicating at opposite ends with the fluid inlet at the body first end and an inlet to said combustion chamber; a discharge path from the combustion chamber for emitting a high velocity jet flame from said second end of the blowtorch body, including a flow restricting throat section communicating with the combustion chamber and an exit expansion zone communicating with such throat section for accelerating the combustion gas stream to form the high velocity jet discharge flame; at least one coolant passageway through the blowtorch body wall and communicating at one end with said discharge path; means for intermittently interrupting the flow of a fluid coolant from a supply to said coolant passageway for intermittently injecting at a sufficient pressure and mixing said coolant with the combustion gases in said discharge path so that the jet discharge flame is alternately hot and cool.

References Cited in the file of this patent

UNITED STATES PATENTS

65,677	Johnson et al.	June 11, 1867
1,025,029	Sutton	Apr. 30, 1912
2,111,872	Rea	Mar. 22, 1938
2,548,463	Blood	Apr. 10, 1951
2,659,923	Wilson	Nov. 17, 1953
2,675,993	Smith et al.	Apr. 20, 1954
2,976,941	Horton	Mar. 28, 1961